NOT TO SCALE

HINDE ENGINEERING
License No. C-2839
401 Harrison Oaks Blvd., Suite 145 Cary, NC 27513

PROJECT REFERENCE NO.	SHEET NO.
B-3159	UC-3A
DESIGNED BY: CLS	
DRAWN BY: JNA	
CHECKED BY: CLS	
APPROVED BY: CLS	
REVISED:	
NORTH CAROLINA DEPARTMENT OF TRANSPORTATION	
UTILITIES ENGINEERING SEC. PHONE:(919)707-6690 FAX:(919)250-4151	UTILITY CONSTRUCTION PLANS ONLY

DocuSigned by: Clint L Stevens 9D6F2CD77EB42D...
NORTH CAROLINA PROFESSIONAL SEAL 040370 ENGINEER CLINT L. STEVENS
7/6/15

UTILITY CONSTRUCTION

PROJECT TYPICAL DETAILS

TRENCH DETAIL

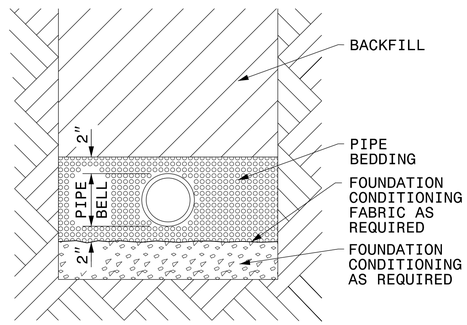

PLACE FOUNDATION CONDITIONING MATERIAL BELOW BEDDING IF REQUIRED, AS DIRECTED BY ENGINEER. PIPE BEDDED IN SELECT MATERIAL, CLASS II (TYPE 1) OR CLASS III. TRENCH BACKFILLED IN LOOSE 6" LAYERS COMPACTED TO TOP OF TRENCH USING LOCAL EXCAVATED MATERIAL IF APPROVED BY THE ENGINEER, OR SELECT MATERIAL. ALL MATERIAL SHALL BE FREE OF ROCKS, FOREIGN MATERIAL, AND FROZEN EARTH. COMPACTION SHALL BE TO APPROXIMATELY 95% DENSITY IN ACCORDANCE WITH AASHTO T-99 AS MODIFIED BY THE DEPARTMENT OF TRANSPORTATION.

MAXIMUM TRENCH WIDTH
AT TOP OF PIPE

NOMINAL PIPE SIZE (INCHES)	TRENCH WIDTH (INCHES)	NOMINAL PIPE SIZE (INCHES)	TRENCH WIDTH (INCHES)
4	28	20	44
6	30	24	48
8	32	30	54
10	34	36	60
12	36	42	66
14	38	48	72
16	40	54	78
18	42		

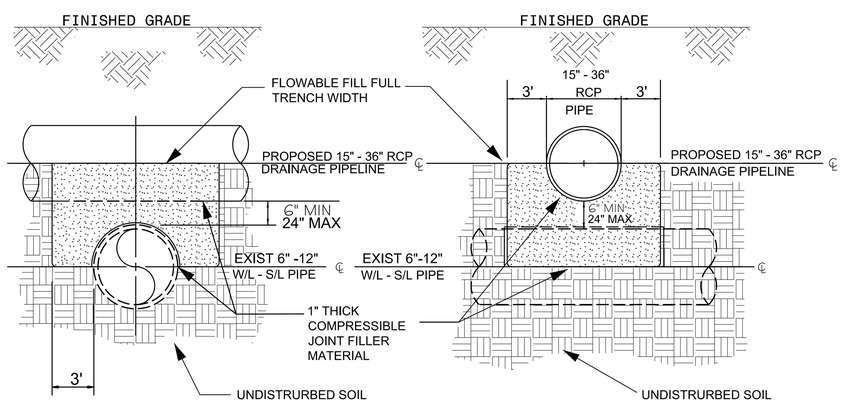

FLOWABLE FILL UNDER PROP. 15"-36" RCP DRAINAGE PIPE

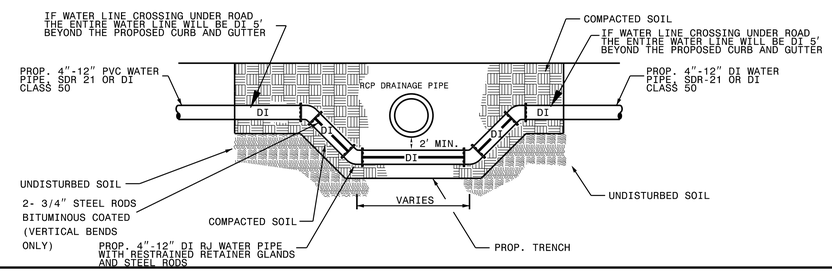

WATER PIPE CROSSING STORM DRAIN

07-JUL-2015 08:24
S:\Groups\PROJECTS\2012\2012801.00 B-3159\Design\Utilities\Engineering\UC\Proj\B3159_ut_dtl_UC03A_psh.dgn
$$$$$$$$$$
$$$$$$$$$$
$$$$$$$$$$