This electronic collection of documents is provided for the convenience of the user and is Not a Certified Document –

The documents contained herein were originally issued and sealed by the individuals whose names and license numbers appear on each page, on the dates appearing with their signature on that page.
This file or an individual page shall not be considered a certified document.

DocuSign Envelope ID: DA518730-DB21-4CE9-928C-9D938A62EA59

09/08/99

TIP PROJECT: R-2603

CONTRACT: C203580

See Sheet 1A For Index of Sheets
See Sheet 1B For Conventional Plan Sheet Symbols
See Sheet 1C-1 - 1C-2 For Survey Control Sheets

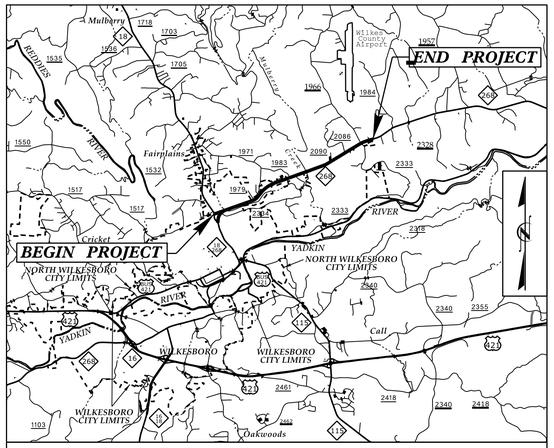

VICINITY MAP

STATE OF NORTH CAROLINA
DIVISION OF HIGHWAYS

WILKES COUNTY

STATE	STATE PROJECT REFERENCE NO.	SHEET NO.	TOTAL SHEETS
N.C.	R-2603	1	

STATE PROJ. NO.	F.A. PROJ. NO.	DESCRIPTION
36001.1.2	STP-0268(15)	PE
36001.2.1	STP-0268(16)	R/W
36001.2.U1	STP-0268(16)	UTILITIES
36001.3.2		CONSTR.

LOCATION: NC 268 FROM MULTI-LANES EAST OF NC 18 TO SR 1966 (AIRPORT ROAD)

TYPE OF WORK: GRADING, DRAINAGE, PAVING, SIGNALS, STRUCTURE, AND CULVERT

NAD 83/95

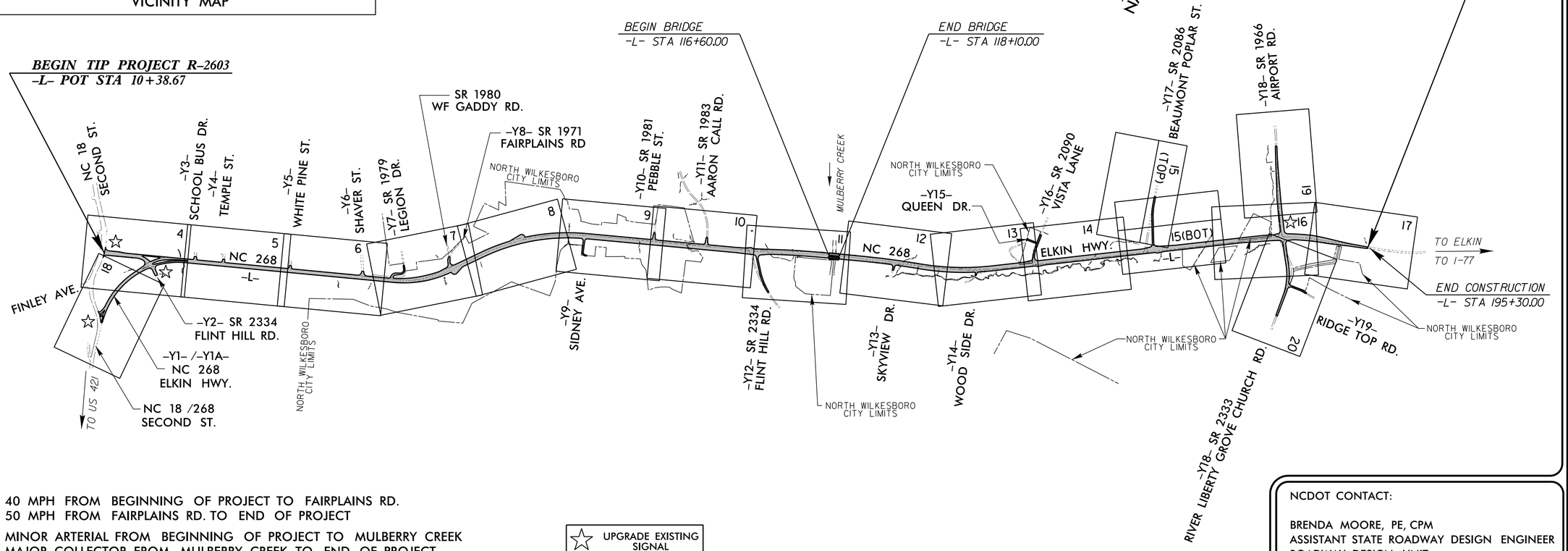

** 40 MPH FROM BEGINNING OF PROJECT TO FAIRPLAINS RD.
50 MPH FROM FAIRPLAINS RD. TO END OF PROJECT

*** MINOR ARTERIAL FROM BEGINNING OF PROJECT TO MULBERRY CREEK
MAJOR COLLECTOR FROM MULBERRY CREEK TO END OF PROJECT

☆ UPGRADE EXISTING SIGNAL

NCDOT CONTACT:

BRENDA MOORE, PE, CPM
ASSISTANT STATE ROADWAY DESIGN ENGINEER
ROADWAY DESIGN UNIT

GRAPHIC SCALES

50 25 0 50 100
PLANS

50 25 0 50 100
PROFILE (HORIZONTAL)

10 5 0 10 20
PROFILE (VERTICAL)

DESIGN DATA

ADT 2015 = 20,540
ADT 2035 = 26,400
K = 10 %
D = 65 %
T = 6 % *
V = **

* TTST 2% + DUAL 4%

FUNC CLASS = ***

REGIONAL TIER

PROJECT LENGTH

LENGTH ROADWAY PROJECT R-2603	=	3.468 mi.
LENGTH STRUCTURE PROJECT R-2603	=	0.028 mi.
TOTAL LENGTH OF TIP PROJECT R-2603	=	3.496 mi.

LENGTH OF PROJECT BASED ON -L-

Prepared for:
DIVISION OF HIGHWAYS
1000 Birch Ridge Dr., NC, 27610

Prepared by:
M A Engineering Consultants, Inc.
598 East Chatham Street - Suite 137
Cary, NC 27511
Phone: 919.297.0220 Fax: 919.297.0221
NC License: F-0160

2012 STANDARD SPECIFICATIONS

RIGHT OF WAY DATE:
APRIL 30, 2013

LETTING DATE:
SEPTEMBER 15, 2015

BURKE EVANS, PE
PROJECT ENGINEER

ROBERT W. PORTER, JR PE
PROJECT DESIGN ENGINEER

HYDRAULICS ENGINEER

8/10/2015

DocuSigned by: Roger Weadon
P.E.
SIGNATURE:

NORTH CAROLINA PROFESSIONAL SEAL 21656 ENGINEER ROGER S. WEADON

ROADWAY DESIGN ENGINEER

8/10/2015

DocuSigned by: David Burke Evans
P.E.
SIGNATURE:

NORTH CAROLINA PROFESSIONAL SEAL 19724 ENGINEER DAVID BURKE EVANS

STATE OF NORTH CAROLINA DEPARTMENT OF TRANSPORTATION

7/31/2015
r:\roadway\proj\R2603_Rdy_tsh.dgn
10:47:08 AM

DocuSign Envelope ID: A6DFAFF1-F469-469F-9B29-FBCE5AB55963

PROJECT REFERENCE NO.	SHEET NO.
R-2603	1-A

M A Engineering Consultants, Inc.
NC License: F-0160
598 East Chatham Street Suite 137 Cary, NC 27511
Phone: 919.297.0220 Fax: 919.297.0221

ROADWAY DESIGN ENGINEER

NORTH CAROLINA PROFESSIONAL SEAL 19724 ENGINEER DAVID BURKE EVANS
DocuSigned by: 8C4AA2260801453...
8/11/2015

2012 ROADWAY ENGLISH STANDARD DRAWINGS — EFF. 01-17-2012, REV. 10-30-2012

The following Roadway Standards as appear in "Roadway Standard Drawings" Highway Design Branch - N. C. Department of Transportation - Raleigh, N. C., Dated January, 2012 are applicable to this project and by reference hereby are considered a part of these plans:

STD.NO.	TITLE
DIVISION 2 - EARTHWORK	
200.03	Method of Clearing - Method III
225.02	Guide for Grading Subgrade - Secondary and Local
225.04	Method of Obtaining Superelevation - Two Lane Pavement
225.06	Method of Grading Sight Distance at Intersections
240.01	Guide for Berm Ditch Construction
DIVISION 3 - PIPE CULVERTS	
300.01	Method of Pipe Installation
310.10	Driveway Pipe Construction
DIVISION 4 - MAJOR STRUCTURES	
422.10	Reinforced Bridge Approach Fills
DIVISION 5 - SUBGRADE, BASES AND SHOULDERS	
560.01	Method of Shoulder Construction - High Side of Superelevated Curve - Method I
DIVISION 6 - ASPHALT BASES AND PAVEMENTS	
654.01	Pavement Repairs
DIVISION 8 - INCIDENTALS	
815.03	Pipe Underdrain and Blind Drain
838.01	Concrete Endwall for Single and Double Pipe Culverts - 15" thru 48" Pipe 90 Skew
838.11	Brick Endwall for Single and Double Pipe Culverts - 15" thru 48" Pipe 90 Skew
838.27	Reinforced Concrete Endwall - for Single 60" Pipe 90 Skew
838.57	Reinforced Brick Endwall - for Single 60" Pipe 90 Skew
838.75	Notes for Reinforced Brick Endwall - Std. Dwg 838.51 thru 838.70
838.80	Precast Endwalls - 12" thru 72" Pipe 90 Skew
840.00	Concrete Base Pad for Drainage Structures
840.01	Brick Catch Basin - 12" thru 54" Pipe
840.02	Concrete Catch Basin - 12" thru 54" Pipe
840.03	Frame, Grates and Hood - for Use on Standard Catch Basin
840.04	Concrete Open Throat Catch Basin - 12" thru 48" Pipe
840.05	Brick Open Throat Catch Basin - 12" thru 48" Pipe
840.14	Concrete Drop Inlet - 12" thru 30" Pipe
840.15	Brick Drop Inlet - 12" thru 30" Pipe
840.16	Drop Inlet Frame and Grates - for use with Std. Dwg 840.14 and 840.15
840.17	Concrete Grated Drop Inlet Type 'A' - 12" thru 72" Pipe
840.18	Concrete Grated Drop Inlet Type 'B' - 12" thru 36" Pipe
840.24	Frames and Narrow Slot Sag Grates
840.25	Anchorage for Frames - Brick or Concrete or Precast
840.26	Brick Grated Drop Inlet Type 'A' - 12" thru 72" Pipe
840.27	Brick Grated Drop Inlet Type 'B' - 12" thru 36" Pipe
840.29	Frames and Narrow Slot Flat Grates
840.30	Driveway Drop Inlet
840.31	Concrete Junction Box - 12" thru 66" Pipe
840.32	Brick Junction Box - 12" thru 66" Pipe
840.34	Traffic Bearing Junction Box - for Use with Pipes 42" and Under
840.35	Traffic Bearing Grated Drop Inlet - for Cast Iron Double Frame and Grates
840.45	Precast Drainage Structure
840.46	Traffic Bearing Precast Drainage Structure
840.54	Manhole Frame and Cover
840.66	Drainage Structure Steps
840.71	Concrete and Brick Pipe Plug
846.01	Concrete Curb, Gutter and Curb & Gutter
846.04	Drop Inlet Installation in Shoulder Berm Gutter
848.01	Concrete Sidewalk
848.03	Driveway Turnout - Drop Curb Type
848.04	Street Turnout
848.05	Curb Ramp - Proposed Curb & Gutter
848.06	Curb Ramp - Existing Curb & Gutter
850.01	Concrete Paved Ditches
850.10	Guide for Berm Drainage Outlet - 15" and 18" Pipe
850.11	Guide for Berm Drainage Outlet - 24" and 30" Pipe
852.01	Concrete Islands
852.04	Method for Placement of Drop Inlets in Grassed Median - Using 1'-6" Curb and Gutter
852.05	Median Curb for Catch Basin - for Use with 1'-6" Curb and Gutter
852.06	Method for Placement of Drop Inlets in Concrete Islands
862.01	Guardrail Placement
862.02	Guardrail Installation
862.03	Structure Anchor Units (Use Detail Sheets 2C-11 & 2C-12 in lieu of Standard Shts. 2, 3, 4, & 5 of 7)
862.04	Anchoring End of Guardrail - B-77 and B-83 Anchor Units
866.02	Woven Wire Fence - with Wood Post
866.03	Woven Wire Fence - with Steel Post
876.01	Rip Rap in Channels
876.02	Guide for Rip Rap at Pipe Outlets
876.04	Drainage Ditches with Class 'B' Rip Rap

GENERAL NOTES:

2012 SPECIFICATIONS
EFFECTIVE: 01-17-2012
REVISED: 10-31-2014

GRADING AND SURFACING OR RESURFACING AND WIDENING:

THE GRADE LINES SHOWN DENOTE THE FINISHED ELEVATION OF THE PROPOSED SURFACING AT GRADE POINTS SHOWN ON THE TYPICAL SECTIONS. WHERE NO GRADE LINES ARE SHOWN, THE PROFILES SHOWN DENOTE THE TOP ELEVATION OF THE EXISTING PAVEMENT ALONG THE CENTER LINE OF SURVEY ON WHICH THE PROPOSED RESURFACING WILL BE PLACED. GRADE LINES MAY BE ADJUSTED BY THE ENGINEER IN ORDER TO SECURE A PROPER TIE-IN.

CLEARING:

CLEARING ON THIS PROJECT SHALL BE PERFORMED TO THE LIMITS ESTABLISHED BY METHOD III.

SUPERELEVATION:

ALL CURVES ON THIS PROJECT SHALL BE SUPERELEVATED IN ACCORDANCE WITH STD. NO. 225.04 USING THE RATE OF SUPERELEVATION AND RUNOFF SHOWN ON THE PLANS.
SUPERELEVATION IS TO BE REVOLVED ABOUT THE GRADE POINTS SHOWN ON THE TYPICAL SECTIONS.

SHOULDER CONSTRUCTION:

ASPHALT, EARTH, AND CONCRETE SHOULDER CONSTRUCTION ON THE HIGH SIDE OF SUPERELEVATED CURVES SHALL BE IN ACCORDANCE WITH STD. NO. 560.01.

SIDE ROADS:

THE CONTRACTOR WILL BE REQUIRED TO DO ALL NECESSARY WORK TO PROVIDE SUITABLE CONNECTIONS WITH ALL ROADS, STREETS, AND DRIVES ENTERING THIS PROJECT. THIS WORK WILL BE PAID FOR AT THE CONTRACT UNIT PRICE FOR THE PARTICULAR ITEMS INVOLVED.

BERM DITCHES:

BERM DITCHES SHALL BE CONSTRUCTED IN ACCORDANCE WITH STD. NO. 240.01 AT LOCATIONS SHOWN ON THE PLANS OR AS DIRECTED BY THE ENGINEER.

UNDERDRAINS:

UNDERDRAINS SHALL BE CONSTRUCTED IN ACCORDANCE WITH STD. NO. 815.03 AT LOCATIONS DIRECTED BY THE ENGINEER.

DRIVEWAYS:

DRIVEWAYS SHALL BE CONSTRUCTED IN ACCORDANCE WITH STD. 848.03 AT LOCATIONS SHOWN ON PLANS OR AS DIRECTED BY THE ENGINEER.

STREET TURNOUT:

STREET RETURNS SHALL BE CONSTRUCTED IN ACCORDANCE WITH STD. NO. 848.04 USING THE RADII NOTED ON PLANS.

GUARDRAIL:

THE GUARDRAIL LOCATIONS SHOWN ON THE PLANS MAY BE ADJUSTED DURING CONSTRUCTION AS DIRECTED BY THE ENGINEER. THE CONTRACTOR SHOULD CONSULT WITH THE ENGINEER PRIOR TO ORDERING GUARDRAIL MATERIAL.

TEMPORARY SHORING:

SHORING REQUIRED FOR THE MAINTENANCE OF TRAFFIC NOT SHOWN ON THE PLANS WILL BE PAID FOR AT THE CONTRACT PRICE FOR "TEMPORARY SHORING".

END BENTS:

THE ENGINEER SHALL CHECK THE STRUCTURE END BENT PLANS, DETAILS, AND CROSS-SECTION PRIOR TO SETTING OF THE SLOPE STAKES FOR THE EMBANKMENT OR EXCAVATION APPROACHING A BRIDGE.

UTILITIES:

UTILITY OWNERS ON THIS PROJECT ARE:
DUKE ENEGRY (DISTRIBUTION); BLUE RIDGE EMC (TRANSMISSION); FRONTIER GAS;
WILKES COMMUNICATION; CENTURYLINK; CHARTER COMMUNICATIONS;
BLUE RIDGE WATER ASSOCIATION; MULBERRY - FAIRPLAINS WATER ASSOCIATION;
TOWN OF NORTH WILKESBORO

ANY RELOCATION OF EXISTING UTILITIES WILL BE ACCOMPLISHED BY OTHERS, EXCEPT AS SHOWN ON THE PLANS.

RIGHT-OF-WAY MARKERS:

ALL RIGHT-OF-WAY MARKERS ON THIS PROJECT SHALL BE PLACED BY OTHERS.

CURB RAMPS:

CURB RAMPS ARE SHOWN ON THE PLANS AT APPROXIMATE LOCATIONS.
CONSTRUCT ALL CURB RAMPS ACCORDANCE WITH STD 848.05 and/or 848.06.

INDEX OF SHEETS

SHEET NUMBER	SHEET
1	TITLE SHEET
1-A	INDEX OF SHEETS, GENERAL NOTES, AND LIST OF STANDARD DRAWINGS
1-B	CONVENTIONAL PLAN SHEET SYMBOLS
1C-1 THRU 1C-5	SURVEY CONTROL SHEETS
2A-1 THRU 2A-8	PAVEMENT SCHEDULE AND TYPICAL SECTIONS
2B-1 THRU 2B-4	DETOUR PLANS & PROFILES (-LDETOUR-, -Y7DET-, Y9DET-, & -Y16DET-)
2B-5 THRU 2B-8	INTERSECTION DETAIL SHEETS
2B-9 THRU 2B-10	CROSSOVER DETAILS (-XOVR1- & -XOVR2-)
2C-1	DETAIL OF 2'-9" CONCRETE CURB & GUTTER
2C-2	DETAIL OF 2'-9" TO 2'-6" CURB & GUTTER TRANSITION SECTION
2C-3	DETAIL OF 1'-6" TO 2'-9" CURB & GUTTER TRANSITION SECTION
2C-4	DETAIL TO CONVERT EXISTING DI, CB, OTCB, OR GI TO JUNCTION BOX (MANOLE OPTIONAL)
2C-5	DETAIL OF JUNCTION BOX CONNECTING EXISTING 4' x 3' RCBC TO 48" RCP w/MANHOLE, DRAINAGE STRUCTURE #0903
2C-6	DETAIL OF JUNCTION BOX CONNECTING EXISTING 4' x 3' RCBC TO 48" RCP w/CATCH BASIN, DRAINAGE STRUCTURE #0914
2C-7	DETAIL OF CONCRETE ENDWALL FOR SINGLE 48" RCP & 18" RCP, DRAINAGE STRUCTURES #0916 & #0917
2C-8	DETAIL OF TRAFFIC BEARING JUNCTION BOX CONNECTING EXISTING 4' x 3' RCBC TO 54" RCP, DRAINAGE STRUCTURE #1422
2C-9	DETAIL OF TRAFFIC BEARING JUNCTION BOX CONNECTING EXISTING 4' x 4' RCBC TO 60" RCP, DRAINAGE STRUCTURE #1627
2C-10	DETAIL OF TEMPORARY 1" STEEL COVER OVER DRAINAGE STRUCTURE
2C-11 THRU 2C-12	DETAILS IN LIEU OF STANDARDS (STD. 862.03 - STRUCTURE ANCHOR UNITS)
2C-13	DETAIL SHOWING COAL COMBUSTION PRODUCT PLACEMENT
2G-1	DETAIL OF STANDARD TEMPORARY SHORING
2H-1	DETAIL OF TEMPORARY CONTAINMENT OF CONTAMINATED SOIL
3B-1	EARTHWORK SUMMARY
3B-2	GUARDRAIL SUMMARY
3B-3	SUMMARIES OF SHOULDER BERM GUTTER, ASPHALT PAVEMENT REMOVAL, WOVEN WIRE FENCE, AND CHAIN LINK FENCE
3D-1 THRU 3D-11	LIST OF PIPES, ENDWALLS, ETC. (FOR PIPES 48 INCHES & UNDER)
3D-12	LIST OF PIPES, ENDWALLS, ETC. (FOR PIPES 54 INCHES & OVER)
3G-1	SUMMARIES OF GEOTEXTILE FOR PAVEMENT STABILIZATION, SUBSURFACE DRAINAGE, AND AGGREGATE SUBGRADE/STABILIZATION
3P-1	PARCEL INDEX SHEET
4 THRU 20	PLAN SHEETS
21 THRU 36	PROFILE SHEETS
TMP-1 THRU TMP-60	TRANSPORTATION MANAGEMENT PLANS
PMP-1 THRU PMP-18	PAVEMENT MARKING PLANS
EC-1 THRU EC-41	EROSION CONTROL PLANS
SIGN-1 THRU SIGN-10	SIGNING PLANS
SIG-1.0 THRU SCP.6	SIGNAL PLANS
UC-1 THRU UC-28	UTILITY CONSTRUCTION PLANS
UO-1 THRU UO-18	UTILITIES BY OTHERS PLANS
X-1A	CROSS SECTION INDEX
X-1B THRU X-1F	CROSS SECTION EARTHWORK VOLUME SUMMARIES
X-1 THRU X-159	CROSS SECTIONS
C-1 THRU C-10	CULVERT PLANS
S-1 THRU S-47	STRUCTURE PLANS
W-1 THRU W-10	WALL PLANS

8/11/2015
r:\roadway\proj\R2603_rdy_psh01A_Index_Stnds_GenNotes.dgn
9:59:55 AM

04/06/15

PROJECT REFERENCE NO.	SHEET NO.
R-2603	1-B

Note: Not to Scale

****S.U.E. = Subsurface Utility Engineering***

STATE OF NORTH CAROLINA
DIVISION OF HIGHWAYS

CONVENTIONAL PLAN SHEET SYMBOLS

BOUNDARIES AND PROPERTY:

- State Line
- County Line
- Township Line
- City Line
- Reservation Line
- Property Line
- Existing Iron Pin — EIP
- Property Corner
- Property Monument — ECM
- Parcel/Sequence Number — 123
- Existing Fence Line
- Proposed Woven Wire Fence
- Proposed Chain Link Fence
- Proposed Barbed Wire Fence
- Existing Wetland Boundary — WLB
- Proposed Wetland Boundary — WLB
- Existing Endangered Animal Boundary — EAB
- Existing Endangered Plant Boundary — EPB
- Existing Historic Property Boundary — HPB
- Known Soil Contamination: Area or Site
- Potential Soil Contamination: Area or Site

BUILDINGS AND OTHER CULTURE:

- Gas Pump Vent or U/G Tank Cap
- Sign — S
- Well — W
- Small Mine
- Foundation
- Area Outline
- Cemetery
- Building
- School
- Church
- Dam

HYDROLOGY:

- Stream or Body of Water
- Hydro, Pool or Reservoir
- Jurisdictional Stream — JS
- Buffer Zone 1 — BZ 1
- Buffer Zone 2 — BZ 2
- Flow Arrow
- Disappearing Stream
- Spring
- Wetland
- Proposed Lateral, Tail, Head Ditch — FLOW
- False Sump

RAILROADS:

- Standard Gauge — CSX TRANSPORTATION
- RR Signal Milepost — MILEPOST 35
- Switch — SWITCH
- RR Abandoned
- RR Dismantled

RIGHT OF WAY:

- Baseline Control Point
- Existing Right of Way Marker
- Existing Right of Way Line
- Proposed Right of Way Line — RW
- Proposed Right of Way Line with Iron Pin and Cap Marker — RW
- Proposed Right of Way Line with Concrete or Granite R/W Marker — RW
- Proposed Control of Access Line with Concrete C/A Marker — CA
- Existing Control of Access — CA
- Proposed Control of Access — CA
- Existing Easement Line — E
- Proposed Temporary Construction Easement — E
- Proposed Temporary Drainage Easement — TDE
- Proposed Permanent Drainage Easement — PDE
- Proposed Permanent Drainage / Utility Easement — DUE
- Proposed Permanent Utility Easement — PUE
- Proposed Temporary Utility Easement — TUE
- Proposed Aerial Utility Easement — AUE
- Proposed Permanent Easement with Iron Pin and Cap Marker

ROADS AND RELATED FEATURES:

- Existing Edge of Pavement
- Existing Curb
- Proposed Slope Stakes Cut — C
- Proposed Slope Stakes Fill — F
- Proposed Curb Ramp — CR
- Existing Metal Guardrail
- Proposed Guardrail
- Existing Cable Guiderail
- Proposed Cable Guiderail
- Equality Symbol
- Pavement Removal

VEGETATION:

- Single Tree
- Single Shrub
- Hedge
- Woods Line
- Orchard
- Vineyard — Vineyard

EXISTING STRUCTURES:

MAJOR:

- Bridge, Tunnel or Box Culvert — CONC
- Bridge Wing Wall, Head Wall and End Wall — CONC WW

MINOR:

- Head and End Wall — CONC HW
- Pipe Culvert
- Footbridge
- Drainage Box: Catch Basin, DI or JB — CB
- Paved Ditch Gutter
- Storm Sewer Manhole — S
- Storm Sewer — S

UTILITIES:

POWER:

- Existing Power Pole
- Proposed Power Pole
- Existing Joint Use Pole
- Proposed Joint Use Pole
- Power Manhole — P
- Power Line Tower
- Power Transformer
- U/G Power Cable Hand Hole
- H-Frame Pole
- U/G Power Line LOS B (S.U.E.*) — P
- U/G Power Line LOS C (S.U.E.*) — P
- U/G Power Line LOS D (S.U.E.*) — P

TELEPHONE:

- Existing Telephone Pole
- Proposed Telephone Pole
- Telephone Manhole — T
- Telephone Pedestal — T
- Telephone Cell Tower
- U/G Telephone Cable Hand Hole — HH
- U/G Telephone Cable LOS B (S.U.E.*) — T
- U/G Telephone Cable LOS C (S.U.E.*) — T
- U/G Telephone Cable LOS D (S.U.E.*) — T
- U/G Telephone Conduit LOS B (S.U.E.*) — TC
- U/G Telephone Conduit LOS C (S.U.E.*) — TC
- U/G Telephone Conduit LOS D (S.U.E.*) — TC
- U/G Fiber Optics Cable LOS B (S.U.E.*) — T FO
- U/G Fiber Optics Cable LOS C (S.U.E.*) — T FO
- U/G Fiber Optics Cable LOS D (S.U.E.*) — T FO

WATER:

- Water Manhole — W
- Water Meter
- Water Valve
- Water Hydrant
- U/G Water Line LOS B (S.U.E.*)
- U/G Water Line LOS C (S.U.E.*)
- U/G Water Line LOS D (S.U.E.*)
- Above Ground Water Line — A/G Water

TV:

- TV Pedestal — C
- TV Tower
- U/G TV Cable Hand Hole — HH
- U/G TV Cable LOS B (S.U.E.*) — TV
- U/G TV Cable LOS C (S.U.E.*) — TV
- U/G TV Cable LOS D (S.U.E.*) — TV
- U/G Fiber Optic Cable LOS B (S.U.E.*) — TV FO
- U/G Fiber Optic Cable LOS C (S.U.E.*) — TV FO
- U/G Fiber Optic Cable LOS D (S.U.E.*) — TV FO

GAS:

- Gas Valve
- Gas Meter
- U/G Gas Line LOS B (S.U.E.*) — G
- U/G Gas Line LOS C (S.U.E.*) — G
- U/G Gas Line LOS D (S.U.E.*) — G
- Above Ground Gas Line — A/G Gas

SANITARY SEWER:

- Sanitary Sewer Manhole
- Sanitary Sewer Cleanout
- U/G Sanitary Sewer Line — SS
- Above Ground Sanitary Sewer — A/G Sanitary Sewer
- SS Forced Main Line LOS B (S.U.E.*) — FSS
- SS Forced Main Line LOS C (S.U.E.*) — FSS
- SS Forced Main Line LOS D (S.U.E.*) — FSS

MISCELLANEOUS:

- Utility Pole
- Utility Pole with Base
- Utility Located Object
- Utility Traffic Signal Box — S
- Utility Unknown U/G Line LOS B (S.U.E.*) — ?UTL
- U/G Tank; Water, Gas, Oil
- Underground Storage Tank, Approx. Loc. — UST
- A/G Tank; Water, Gas, Oil
- Geoenvironmental Boring
- U/G Test Hole LOS A (S.U.E.*)
- Abandoned According to Utility Records — AATUR
- End of Information — E.O.I.

PROJECT REFERENCE NO.	SHEET NO.
R–2603	1C–1
Location and Surveys	

SURVEY CONTROL SHEET R–2603

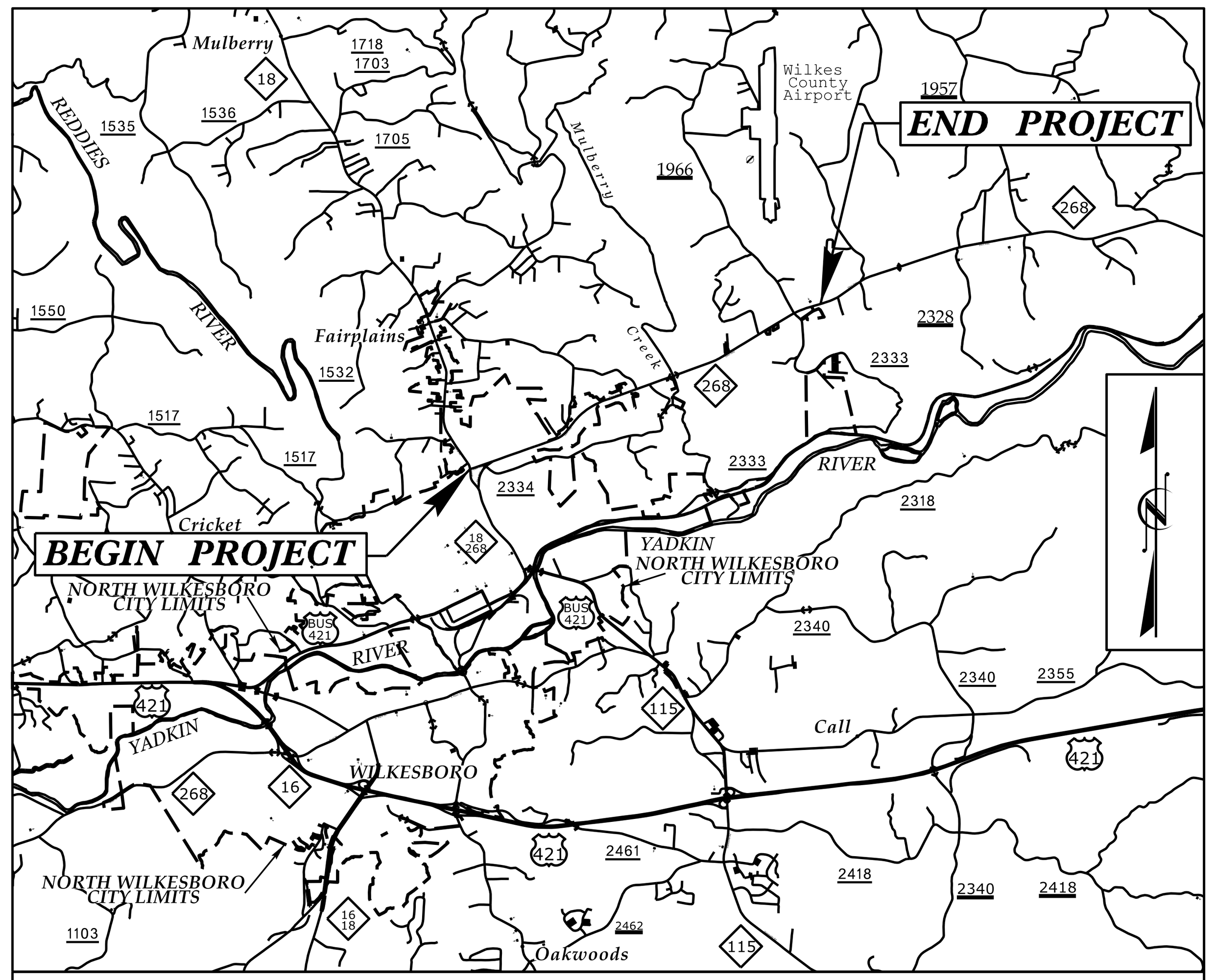

VICINITY MAP

BL

POINT	DESC.	NORTH	EAST	ELEVATION	L STATION	OFFSET
BL7	BL-7	889221.9707	1367385.1973	1175.88	OUTSIDE PROJECT LIMITS	
BL8	BL-8	889872.2554	1367288.2578	1192.02	11+06.15	1092.63 RT
BL9	BL-9	890408.1684	1367272.1688	1172.09	12+71.39	582.57 RT
BL10	BL-10	891069.8423	1367513.8141	1125.54	17+21.66	40.85 RT
BL11	BL-11	891280.3489	1368093.2758	1104.84	23+38.16	37.67 RT
BL12	BL-12	891424.9732	1368493.1995	1111.28	27+63.43	36.10 RT
GPS1	GPS R2603-1	891634.7130	1368845.2810	1108.64	31+65.56	42.89 LT
GPS2	GPS R2603-2	891899.6260	1369604.0340	1082.44	39+69.21	36.94 LT
BL13	BL-13	892112.6498	1370416.6552	1088.95	48+06.12	36.00 RT
BL14	BL-14	892338.3725	1370987.1009	1095.99	54+15.93	30.08 RT
BL15	BL-15	892766.4457	1371490.7587	1075.68	60+73.06	9.86 RT
BL16	BL-16	893400.0753	1371955.1857	1071.85	68+53.48	46.84 LT
BL17	BL-17	893882.9797	1372577.7565	1061.66	76+30.75	49.43 LT
BL18	BL-18	894077.1059	1373006.0702	1056.67	80+94.05	42.45 LT
BL19	BL-19	894389.5757	1373979.0144	1050.44	91+14.72	6.86 LT
BL20	BL-20	894667.8471	1374756.1270	1052.23	99+40.15	5.68 LT
GPS3	GPS R2603-3	894888.6970	1375253.6080	1039.69	104+84.28	40.71 LT
GPS4	GPS R2603-4	895173.7160	1376184.1500	998.70	114+55.89	43.83 RT
BL21	BL-21	895390.1134	1376657.1095	997.48	119+74.31	1.28 RT
BL22	BL-22	895617.1604	1377272.2038	999.33	126+29.42	15.93 LT
BL23	BL-23	895786.0538	1377853.5697	1008.52	132+35.17	9.19 LT
BL24	BL-24	895996.7834	1378437.6241	1021.47	138+52.95	35.99 RT
BL25	BL-25	896387.1884	1379098.7675	1037.55	146+18.94	43.65 RT
BL26	BL-26	896791.4603	1379763.5885	1053.84	153+97.02	46.22 RT
BL27	BL-27	897241.6275	1380512.4652	1071.97	162+70.76	53.56 RT
BL28	BL-28	897684.1904	1381222.3538	1098.01	171+07.28	47.02 RT
BL29	BL-29	898000.5078	1381743.6907	1120.76	177+17.06	49.63 RT
BL30	BL-30	898329.6270	1382186.5697	1130.76	182+65.17	20.41 LT
BL31	BL-31	898490.6599	1382635.8103	1119.94	187+40.74	6.60 LT
BL32	BL-32	898675.3700	1383252.0436	1097.50	193+83.93	19.68 LT
BL33	BL-33	898845.3973	1383904.5960	1076.65	200+56.62	19.42 RT
GPS6	GPS R2603-6	898896.2720	1384283.6550	1064.29	OUTSIDE PROJECT LIMITS	

BY1

POINT	DESC.	NORTH	EAST	ELEVATION	Y1 STATION	OFFSET
BY134	BY1-34	891716.0249	1366269.8489	1190.57	22+72.38	1440.01 LT
BY135	BY1-35	890954.4334	1366847.8719	1172.99	20+83.47	547.43 LT
BY136	BY1-36	890320.2018	1366861.7176	1175.75	16+44.57	357.89 LT
BY137	BL-8	889872.2554	1367288.2578	1192.02	12+17.76	37.14 RT

BY2

POINT	DESC.	NORTH	EAST	ELEVATION	L STATION	OFFSET
BY238	BY2-38	890954.4334	1366847.8719	1172.99	10+55.73	74.64 LT
BY239	BL-10	891069.8423	1367513.8141	1125.54	17+21.66	40.85 RT

BY3

POINT	DESC.	NORTH	EAST	ELEVATION	L STATION	OFFSET
BY340	BY3-40	892473.0818	1370191.2986	1102.25	47+15.23	379.26 LT
BY341	BL-13	892112.6498	1370416.6552	1088.95	48+06.12	36.00 RT

BY4

POINT	DESC.	NORTH	EAST	ELEVATION	Y7 STATION	OFFSET
BY442	BY4-42	892791.0979	1370683.4409	1083.36	OUTSIDE PROJECT LIMITS	
BY443	BY4-43	892529.0737	1370880.8922	1110.07	11+36.06	10.36 LT
BY444	BY4-44	892377.1470	1370917.3828	1105.63	12+41.60	68.76 LT
BY445	BL-13	892112.6498	1370416.6552	1088.95	OUTSIDE PROJECT LIMITS	

BY5

POINT	DESC.	NORTH	EAST	ELEVATION	Y8 STATION	OFFSET
BY546	BY5-46	893254.4577	1371488.6742	1085.14	OUTSIDE PROJECT LIMITS	
BY547	BY5-47	893033.9134	1371366.3816	1073.31	12+14.76	31.67 RT
BY548	BL-15	892766.4457	1371490.7587	1075.68	OUTSIDE PROJECT LIMITS	

BY6

POINT	DESC.	NORTH	EAST	ELEVATION	Y10 STATION	OFFSET
BY649	BY6-49	894686.2172	1373870.6443	1070.61	OUTSIDE PROJECT LIMITS	
BY650	BL-19	894389.5757	1373979.0144	1050.44	12+93.17	1.66 RT

BY7

POINT	DESC.	NORTH	EAST	ELEVATION	Y11 STATION	OFFSET
BY751	BY7-51	895518.4049	1373862.6392	1108.96	OUTSIDE PROJECT LIMITS	
BY752	BY7-52	895305.8041	1374047.3160	1095.77	12+40.05	12.96 RT
BY753	BY7-53	895109.1912	1374462.4479	1076.25	16+88.35	62.51 RT
BY754	BL-20	894667.8471	1374756.1270	1052.23	20+51.59	448.63 RT

BY8

POINT	DESC.	NORTH	EAST	ELEVATION	Y12 STATION	OFFSET
BY855	GPS R2603-3	894888.6970	1375253.6080	1039.69	OUTSIDE PROJECT LIMITS	
BY856	BY8-56	894610.2710	1375523.3115	1049.57	13+14.58	52.45 RT

BY9

POINT	DESC.	NORTH	EAST	ELEVATION	Y16 STATION	OFFSET
BY958	BY9-58	897141.2351	1378977.6626	1092.99	OUTSIDE PROJECT LIMITS	
BY959	BY9-59	896809.2311	1378995.8318	1076.12	11+11.69	17.18 RT
BY960	BL-25	896387.1884	1379098.7675	1037.55	OUTSIDE PROJECT LIMITS	

BY10

POINT	DESC.	NORTH	EAST	ELEVATION	L STATION	OFFSET
BY1061	BY10-61	898218.1424	1380240.5416	1193.62	165+49.01	921.17 LT
BY1062	BL-27	897241.6275	1380512.4652	1071.97	162+70.76	53.56 RT

BY11

POINT	DESC.	NORTH	EAST	ELEVATION	Y18 STATION	OFFSET
BY1163	BY11-63	899728.6902	1381415.4949	1189.24	14+51.04	15.52 LT
BY1164	BY11-64	898961.3496	1381776.0782	1152.23	22+96.04	29.96 RT
BY1165	BL-30	898329.6270	1382186.5697	1130.76	30+48.00	5.24 RT

BY12

POINT	DESC.	NORTH	EAST	ELEVATION	Y18 STATION	OFFSET
BY1266	BL-30	898329.6270	1382186.5697	1130.76	30+48.00	5.24 RT
BY1267	BY12-67	898020.3004	1382465.3351	1149.19	34+59.13	60.87 LT
BY1268	BY12-68	897734.3794	1382585.9136	1156.02	37+54.39	47.37 LT
BY1269	BY12-69	897366.0132	1382603.8200	1168.53	41+14.87	21.58 LT
BY1270	BY12-70	896994.5186	1382627.5128	1162.58	OUTSIDE PROJECT LIMITS	

BY13

POINT	DESC.	NORTH	EAST	ELEVATION	Y19 STATION	OFFSET
BY1371	BY13-71	897717.0386	1382986.7921	1138.62	OUTSIDE PROJECT LIMITS	
BY1372	BY13-68	897734.3794	1382585.9136	1156.02	10+44.32	19.88 LT

BM1 ELEVATION = 1179.33
N 890257 E 1366743
Y1 STATION 15+93.00 473 LEFT
RR SPIKE IN CONC CURB FINLEY AVE.

BM2 ELEVATION = 1105.45
N 891030 E 1368006
Y1 STATION 28+89.00 242 RIGHT
8" SPIKE IN ROOT OF 10" POPLAR TREE

BM3 ELEVATION = 1074.70
N 891781 E 1369986
L STATION 42+89.00 204 RIGHT
8" SPIKE IN ROOT OF 16" POPLAR TREE

BM4 ELEVATION = 1075.36
N 892873 E 1371332
Y8 STATION 13+44.00 86 RIGHT
8" SPIKE IN ROOT OF 10" PINE TREE

BM5 ELEVATION = 1055.75
N 893853 E 1372913
L STATION 79+20.00 129 RIGHT
8" SPIKE IN ROOT OF 10" FORKED MAPLE

BM6 ELEVATION = 994.53
N 895532 E 1376429
L STATION 118+08.00 210 LEFT
8" SPIKE IN ROOT OF 10" WALNUT TREE
ON BANK OF MULBERRY CREEK

BM7 ELEVATION = 1027.66
N 896088 E 1378851
L STATION 142+52.00 169 RIGHT
8" SPIKE IN ROOT OF 12" BEECH TREE

BM8 ELEVATION = 1077.21
N 897344. E 1381051.
L STATION 167+83.00 248 RIGHT
8" SPIKE IN ROOT OF 10" WHITE OAK TREE

BM9 ELEVATION = 1110.70
N 898863. E 1383138.
L STATION 193+26.00 232 LEFT
8" SPIKE IN ROOT OF 10' SUMACK TREE

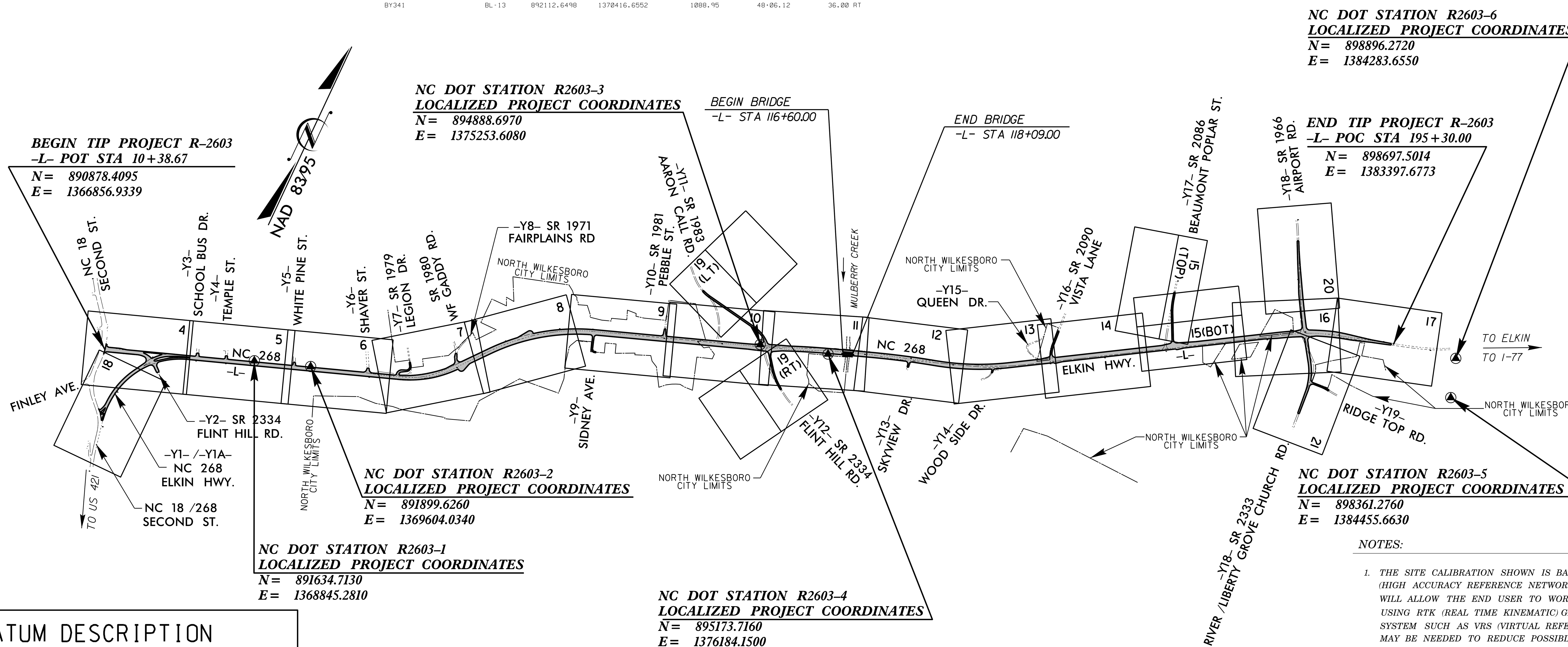

DATUM DESCRIPTION

THE LOCALIZED COORDINATE SYSTEM DEVELOPED FOR THIS PROJECT IS BASED ON THE STATE PLANE COORDINATES ESTABLISHED BY NCDOT FOR MONUMENT "R2603-1"
WITH NAD 83/95 STATE PLANE GRID COORDINATES OF
NORTHING: 891634.7130(ft) EASTING: 1368845.2810(ft)
ELEVATION: 1108.64(ft)
THE AVERAGE COMBINED GRID FACTOR USED ON THIS PROJECT (GROUND TO GRID) IS: 0.999955442
THE N.C. LAMBERT GRID BEARING AND LOCALIZED HORIZONTAL GROUND DISTANCE FROM "R2603-1" TO -L- STATION 10+38.67 IS
S 69°10'29" W 2127.33'
ALL LINEAR DIMENSIONS ARE LOCALIZED HORIZONTAL DISTANCES
VERTICAL DATUM USED IS NAVD 88

NOTE: DRAWING NOT TO SCALE

NOTES:

1. *THE SITE CALIBRATION SHOWN IS BASED UPON A NETWORK TIED TO THE HARN (HIGH ACCURACY REFERENCE NETWORK) NAD 83/95 ADJUSTMENT. THIS CALIBRATION WILL ALLOW THE END USER TO WORK WITHIN THE SAME COORDINATE SYSTEM WHEN USING RTK (REAL TIME KINEMATIC) GPS AND A LOCAL BASE STATION. IF ANOTHER SYSTEM SUCH AS VRS (VIRTUAL REFERENCE STATION) IS USED, ADDITIONAL FIELD TIES MAY BE NEEDED TO REDUCE POSSIBLE ERRORS, OR BIASES.*

2. *THE CONTROL DATA FOR THIS PROJECT CAN BE FOUND ELECTRONICALLY BY SELECTING PROJECT CONTROL DATA AT:*
   HTTP://WWW.NCDOT.ORG/DOH/PRECONSTRUCT/HIGHWAY/LOCATION/PROJECT/

   THE FILES TO BE FOUND ARE AS FOLLOWS:
   R2603_LS_GPSCALIB_DATE.HTML
   R2603_LS_WGS84_DATE.TXT
   R2603_LS_LOCAL_DATE.TXT
   R2603_LS_CONTROL_DATE.TXT

   THE WGS84 AND LOCAL FILES ARE COMMA DELIMITED AND CAN BE USED TO REPRODUCE THE SITE CALIBRATION FOR THE END USER'S GPS EQUIPMENT. IF FURTHER INFORMATION IS NEEDED, PLEASE CONTACT THE LOCATION AND SURVEYS UNIT.

◬ *INDICATES GEODETIC CONTROL MONUMENTS USED OR SET FOR HORIZONTAL PROJECT CONTROL BY THE NCDOT LOCATION AND SURVEYS UNIT.*
PROJECT CONTROL ESTABLISHED USING GLOBAL POSITIONING SYSTEM.
NETWORK ESTABLISHED FROM EXISTING HARN MONUMENTATION
SEE GPS CALIBRATION SHEET FOR HORIZONTAL AND VERTICAL COORDINATE VALUES.

7/31/2015
r:\roadway\proj\R2603_ls_1c-1.dgn
10:47:15 AM

SURVEY CONTROL SHEET R–2603

PROJECT REFERENCE NO.	SHEET NO.
R–2603	1C–2
Location and Surveys	

GPS Calibration Report

Project : r2603calLW

TIP Number	r2603		
User name	rgmiller	**Date & Time**	11:44:02 AM 5/2/2013
Coordinate System	US State Plane 1983(at ground)	**Zone**	North Carolina 3200
Horizontal Datum	calibration		
Vertical Datum	navd88	**Geoid Model**	GEOID99 (Conus)
Coordinate Units	US survey feet		
Distance Units	US survey feet		
Height Units	US survey feet		

LOCAL SITE INFORMATION

Localized around	
Latitude	36°10'52.06182"N
Longitude	81°08'19.29141"W
Site Scale Factor	1.0000445600
Height	1000.315sft

The North Carolina Department of Transportation uses a Localized Coordinate System which is very similar to North Carolina Zone 3200 from which it is derived.
Please take care in utilizing these coordinates to eliminate confusion of the two systems.
This file is to aid in the use of Real Time Kinematic (RTK) GPS during construction layout.

Datum Transformation Parameters

Datum Transformation computation not requested

Updated Default Projection (Transverse Mercator) Definition

Updated default projection not requested

Horizontal Adjustment Parameters

Northing coordinate of rotation center	895142.383sft
Easting coordinate of rotation center	1376437.732sft
Rotation about the center point	0°00'00"
Translation north	0.000sft
Translation east	0.000sft
Scale factor	1.00000511

Vertical Adjustment Parameters

Northing coordinate of origin point	891634.713sft
Easting coordinate of origin point	1368845.281sft
Vertical separation at origin	-108.436sft
Slope north	0.367ppm
Slope east	-0.254ppm

Geoid Model Definition

GEOID99 (Conus)

Residual Differences Between GPS (WGS84) And Local Coordinates

Summary

	Maximum error	Root Mean Square error	Point
Horizontal	0.002sft	0.000	GPS 6 - WGS84
Vertical	0.002sft	0.000	GPS 2 - WGS84
Three-dimensional	0.002sft	0.001	GPS 2 - WGS84

Point Residuals

WGS84 Coordinates		Calculated point FOR DISPLAY ONLY		Local Coordinates	
Point	GPS 1 - WGS84	**Northing**	891634.713sft	**Point**	GPS1
Latitude	36°10'52.06188"N	**Easting**	1368845.281sft	**Northing**	891634.713sft
Longitude	81°08'19.29133"W	**Elevation**	1108.641sft	**Easting**	1368845.281sft
Height	1000.146sft	**Horz error**	0.000sft	**Elevation**	1108.640sft
		Vert error	0.001sft	**Utilized**	Horz and Vert
		3D error	0.001sft	**Quality**	Survey quality
Point	GPS 2 - WGS84	**Northing**	891899.626sft	**Point**	GPS2
Latitude	36°10'54.84234"N	**Easting**	1369604.034sft	**Northing**	891899.626sft
Longitude	81°08'10.10830"W	**Elevation**	1082.437sft	**Easting**	1369604.034sft
Height	973.928sft	**Horz error**	0.000sft	**Elevation**	1082.439sft
		Vert error	0.002sft	**Utilized**	Horz and Vert
		3D error	0.002sft	**Quality**	Survey quality
Point	GPS 3 - WGS84	**Northing**	894888.697sft	**Point**	GPS3
Latitude	36°11'25.58902"N	**Easting**	1375253.608sft	**Northing**	894888.697sft
Longitude	81°07'01.99156"W	**Elevation**	1039.693sft	**Easting**	1375253.609sft
Height	931.100sft	**Horz error**	0.001sft	**Elevation**	1039.693sft
		Vert error	0.000sft	**Utilized**	Horz and Vert
		3D error	0.001sft	**Quality**	Survey quality
Point	GPS 4 - WGS84	**Northing**	895173.715sft	**Point**	GPS4
Latitude	36°11'28.60280"N	**Easting**	1376184.149sft	**Northing**	895173.716sft
Longitude	81°06'50.71681"W	**Elevation**	998.796sft	**Easting**	1376184.150sft
Height	890.189sft	**Horz error**	0.001sft	**Elevation**	998.794sft
		Vert error	0.002sft	**Utilized**	Horz and Vert
		3D error	0.002sft	**Quality**	Survey quality
Point	GPS 5 - WGS84	**Northing**	898361.276sft	**Point**	GPS5
Latitude	36°12'01.84534"N	**Easting**	1384455.662sft	**Northing**	898361.276sft
Longitude	81°05'10.65378"W	**Elevation**	1066.164sft	**Easting**	1384455.664sft
Height	957.442sft	**Horz error**	0.001sft	**Elevation**	1066.163sft
		Vert error	0.001sft	**Utilized**	Horz and Vert
		3D error	0.002sft	**Quality**	Survey quality
Point	GPS 6 - WGS84	**Northing**	898896.272sft	**Point**	GPS6
Latitude	36°12'07.09858"N	**Easting**	1384283.657sft	**Northing**	898896.273sft
Longitude	81°05'12.88902"W	**Elevation**	1064.288sft	**Easting**	1384283.655sft
Height	955.576sft	**Horz error**	0.002sft	**Elevation**	1064.290sft
		Vert error	0.002sft	**Utilized**	Horz and Vert
		3D error	0.002sft	**Quality**	Survey quality

DATUM DESCRIPTION

THE LOCALIZED COORDINATE SYSTEM DEVELOPED FOR THIS PROJECT IS BASED ON THE STATE PLANE COORDINATES ESTABLISHED BY NCDOT FOR MONUMENT "R2603-1"
WITH NAD 83/95 STATE PLANE GRID COORDINATES OF
NORTHING: 891634.7130(ft) EASTING: 1368845.2810(ft)
ELEVATION: 1108.64(ft)
THE AVERAGE COMBINED GRID FACTOR USED ON THIS PROJECT (GROUND TO GRID) IS: 0.999955442
THE N.C. LAMBERT GRID BEARING AND LOCALIZED HORIZONTAL GROUND DISTANCE FROM "R2603-1" TO -L- STATION 10+38.67 IS S 69°10'29" W 2127.33'
ALL LINEAR DIMENSIONS ARE LOCALIZED HORIZONTAL DISTANCES
VERTICAL DATUM USED IS NAVD 88

NOTE: DRAWING NOT TO SCALE

NOTES:

1. *THE SITE CALIBRATION SHOWN IS BASED UPON A NETWORK TIED TO THE HARN (HIGH ACCURACY REFERENCE NETWORK) NAD 8395 ADJUSTMENT. THIS CALIBRATION WILL ALLOW THE END USER TO WORK WITHIN THE SAME COORDINATE SYSTEM WHEN USING RTK (REAL TIME KINEMATIC) GPS AND A LOCAL BASE STATION. IF ANOTHER SYSTEM SUCH AS VRS (VIRTUAL REFERENCE STATION) IS USED, ADDITIONAL FIELD TIES MAY BE NEEDED TO REDUCE POSSIBLE ERRORS, OR BIASES.*

2. *THE CONTROL DATA FOR THIS PROJECT CAN BE FOUND ELECTRONICALLY BY SELECTING PROJECT CONTROL DATA AT:*
HTTP://WWW.NCDOT.ORG/DOH/PRECONSTRUCT/HIGHWAY/LOCATION/PROJECT/

THE FILES TO BE FOUND ARE AS FOLLOWS:
R2603_LS_GPSCALIB_DATE.HTML
R2603_LS_WGS84_DATE.TXT
R2603_LS_LOCAL_DATE.TXT
R2603_LS_CONTROL_DATE.TXT

THE WGS84 AND LOCAL FILES ARE COMMA DELIMITED AND CAN BE USED TO REPRODUCE THE SITE CALIBRATION FOR THE END USER'S GPS EQUIPMENT. IF FURTHER INFORMATION IS NEEDED, PLEASE CONTACT THE LOCATION AND SURVEYS UNIT.

© *INDICATES GEODETIC CONTROL MONUMENTS USED OR SET FOR HORIZONTAL PROJECT CONTROL BY THE NCDOT LOCATION AND SURVEYS UNIT.*
PROJECT CONTROL ESTABLISHED USING GLOBAL POSITIONING SYSTEM.
NETWORK ESTABLISHED FROM EXISTING HARN MONUMENTATION
SEE GPS CALIBRATION SHEET FOR HORIZONTAL AND VERTICAL COORDINATE VALUES.

7/31/2015
10:42:18 AM
R:\Proj\R2603_ls_lc-2.dgn

SURVEY CONTROL SHEET R-2603

ROW MARKER IRON PIN AND CAP-E

ALIGN	STATION	OFFSET	NORTH	EAST
L	23+95.00	-49.78	891381.8332	1368117.3601
L	27+25.00	-49.92	891493.0379	1368428.0585
L	28+10.00	-49.20	891520.9753	1368508.3394
L	30+50.00	80.00	891480.0977	1368777.8243
L	30+50.00	49.48	891508.8396	1368767.5501
L	31+00.00	49.48	891525.6698	1368814.6324
L	31+00.00	80.00	891496.9278	1368824.9066
L	36+90.00	-48.85	891816.8557	1369337.1065
L	37+85.00	-48.88	891848.8632	1369426.5521
L	47+30.00	-47.40	892165.5557	1370316.9077
L	48+55.00	-49.09	892209.2193	1370434.0458
L	51+75.00	-60.07	892327.2731	1370731.6763
L	54+16.35	-63.00	892421.3211	1370944.8690
L	57+34.14	55.00	892493.8657	1371274.5936
L	58+35.68	75.00	892546.4615	1371368.2386
L	59+25.00	-63.00	892708.2981	1371338.6901
L	60+30.00	-75.00	892789.7689	1371398.8992
L	60+50.00	68.33	892710.6005	1371520.0346
L	60+84.97	112.00	892710.6434	1371577.1908
L	61+37.22	123.00	892743.9429	1371618.9354
L	61+55.00	-65.94	892877.9209	1371484.5266
L	62+60.37	70.00	892872.6587	1371656.4465
L	65+98.22	70.00	893133.2286	1371871.4963
L	70+30.00	-70.54	893541.4573	1372069.2479
L	71+25.00	-117.00	893640.7948	1372112.9867
L	72+25.00	-127.00	893714.1068	1372187.7695
L	72+80.00	-110.00	893735.3918	1372243.5886
L	73+10.00	-72.73	893723.8882	1372290.6547
L	78+88.91	-70.00	894021.9766	1372802.4862
L	80+60.00	70.00	893959.9740	1373014.6200
L	81+35.16	-70.00	894117.4315	1373035.9020
L	81+85.00	70.00	894002.5635	1373130.1840
L	90+80.00	-70.00	894437.2348	1373924.9707
L	92+00.00	-60.00	894468.4420	1374041.2725
L	98+05.00	-60.00	894673.2191	1374610.5627
L	99+45.00	-70.00	894730.0153	1374738.9145
L	101+87.26	-70.00	894812.0156	1374966.8791
L	101+87.26	70.00	894680.2790	1375014.2656
L	103+00.00	70.00	894719.3056	1375120.8710
L	103+75.00	-70.00	894876.7574	1375141.6948
L	105+24.91	80.00	894791.4540	1375335.9073
L	107+00.00	90.00	894848.9704	1375503.1477
L	108+37.10	100.00	894894.1052	1375634.3633
L	108+37.10	-110.00	895086.6772	1375550.6017
L	108+38.35	-109.39	895086.6219	1375551.9996
L	114+67.98	100.00	895124.9991	1376214.5768
L	115+50.00	120.00	895134.1007	1376298.5089
L	118+00.00	80.00	895256.7784	1376519.9817
L	120+71.22	80.00	895349.0647	1376775.0232
L	128+15.00	-100.00	895751.4969	1377426.4552
L	129+80.77	80.00	895624.0044	1377635.4237
L	129+80.77	-75.00	895773.3310	1377593.8719
L	130+50.00	75.00	895648.3610	1377701.9175
L	132+55.00	-75.00	895854.6344	1377850.0729
L	134+50.00	-140.00	895983.5412	1378003.4106
L	137+50.00	-146.07	896110.3131	1378262.8506
L	139+40.00	-138.18	896190.6912	1378427.3451
L	139+40.00	-170.00	896218.2667	1378411.4647
L	140+43.69	75.00	896059.9555	1378624.6233
L	140+43.69	-130.00	896234.7608	1378517.5339
L	141+00.00	-155.00	896285.4946	1378552.4911
L	145+35.00	-145.00	896504.2058	1378928.6431
L	147+35.00	-115.00	896583.1020	1379114.8564
L	151+25.00	75.00	896624.8183	1379546.6663
L	152+00.00	55.00	896681.0515	1379600.1717
L	153+50.00	65.00	896750.8824	1379733.3019
L	156+00.00	65.00	896881.4792	1379946.4790
L	157+00.00	60.00	896937.9814	1380029.1379
L	160+00.00	60.00	897094.6975	1380284.9505
L	161+00.00	70.00	897138.4091	1380375.4452
L	162+62.72	-115.00	897381.1637	1380417.5575
L	170+00.00	-80.00	897736.4637	1381064.5248
L	172+75.93	70.00	897752.6979	1381378.1679
L	178+84.93	-80.00	898198.7376	1381819.1089
L	181+70.00	-85.00	898345.2336	1382071.4187
L	183+50.00	-85.00	898424.1701	1382238.0151
L	183+51.30	110.00	898246.3721	1382318.1061

ROW MARKER IRON PIN AND CAP-E

ALIGN	STATION	OFFSET	NORTH	EAST
L	189+18.60	110.00	898427.0074	1382836.4005
L	189+18.60	-85.00	898615.7356	1382787.3425
L	190+62.11	110.00	898463.9043	1382976.0110
L	190+65.06	57.39	898515.4824	1382965.2171
L	194+50.00	-49.31	898722.2051	1383307.1071

ROW MARKER IRON PIN AND CAP-E

ALIGN	STATION	OFFSET	NORTH	EAST
Y1	25+50.00	43.15	891040.3463	1367651.4154

ROW MARKER IRON PIN AND CAP-E

ALIGN	STATION	OFFSET	NORTH	EAST
Y2	18+75.00	-30.40	890966.0163	1367652.9593

ROW MARKER IRON PIN AND CAP-E

ALIGN	STATION	OFFSET	NORTH	EAST
Y3	10+35.00	-22.59	891391.1638	1368095.8699

ROW MARKER IRON PIN AND CAP-E

ALIGN	STATION	OFFSET	NORTH	EAST
Y4	10+35.00	-30.09	891531.3524	1368489.0808
Y4	10+35.00	26.49	891511.4879	1368436.0992

ROW MARKER IRON PIN AND CAP-E

ALIGN	STATION	OFFSET	NORTH	EAST
Y5	10+30.00	-32.88	891864.0126	1369401.0884
Y5	10+30.00	27.12	891840.7040	1369345.7915

ROW MARKER IRON PIN AND CAP-E

ALIGN	STATION	OFFSET	NORTH	EAST
Y6	11+25.00	-40.92	892228.5999	1370395.1550
Y6	11+15.00	31.58	892202.7129	1370326.6934

ROW MARKER IRON PIN AND CAP-E

ALIGN	STATION	OFFSET	NORTH	EAST
Y7	11+00.00	18.27	892543.4601	1370837.1561
Y7	11+00.00	25.00	892539.7585	1370831.5309
Y7	11+55.45	25.00	892493.4396	1370862.0104
Y7	12+55.75	25.00	892443.1726	1370848.9682
Y7	13+23.25	30.00	892416.3735	1370786.8204
Y7	13+73.19	30.00	892362.1624	1370740.6427

ROW MARKER IRON PIN AND CAP-E

ALIGN	STATION	OFFSET	NORTH	EAST
Y8	12+55.00	-25.00	892990.3240	1371420.6890
Y8	12+55.00	-19.54	892990.2048	1371415.2286
Y8	12+84.45	30.00	892956.5297	1371368.1857
Y8	13+45.00	-40.00	892915.5987	1371449.9281
Y8	13+85.00	30.00	892850.9860	1371402.6258

ROW MARKER IRON PIN AND CAP-E

ALIGN	STATION	OFFSET	NORTH	EAST
Y9	10+85.00	33.03	893953.7338	1373036.1563
Y9	10+97.52	-42.44	893965.4125	1373111.7653
Y9	12+90.44	-40.54	893832.6405	1373159.8728
Y9	13+25.00	-14.61	893813.4138	1373187.5480

ROW MARKER IRON PIN AND CAP-E

ALIGN	STATION	OFFSET	NORTH	EAST
Y10	11+45.00	-15.00	894535.2951	1373947.4270
Y10	11+45.00	-20.00	894536.8937	1373952.1646
Y10	11+56.49	15.19	894514.7546	1373922.4955
Y10	12+05.00	-40.00	894486.4371	1373990.2976

ROW MARKER IRON PIN AND CAP-E

ALIGN	STATION	OFFSET	NORTH	EAST
Y11	12+70.00	-30.00	894768.4518	1374685.3262
Y11	12+85.00	30.00	894737.8057	1374631.6064

ROW MARKER IRON PIN AND CAP-E

ALIGN	STATION	OFFSET	NORTH	EAST
Y12	11+25.00	-40.00	894817.8268	1375482.5170
Y12	12+25.00	83.06	894663.9001	1375444.4394
Y12	13+02.15	-35.00	894673.3525	1375585.1537
Y12	14+00.00	53.32	894540.9763	1375581.3863
Y12	14+35.00	-35.00	894577.4212	1375669.2414
Y12	15+50.00	-27.19	894498.9222	1375748.0371
Y12	15+50.00	33.02	894450.9729	1375711.6228

ROW MARKER IRON PIN AND CAP-E

ALIGN	STATION	OFFSET	NORTH	EAST
Y15	11+62.76	35.00	896746.1670	1378854.1982
Y15	11+64.66	-25.00	896686.1763	1378856.3727

ROW MARKER IRON PIN AND CAP-E

ALIGN	STATION	OFFSET	NORTH	EAST
Y16	11+55.00	28.62	896765.2434	1378987.3559
Y16	12+40.00	90.00	896676.2756	1378931.8824
Y16	12+81.82	-31.61	896642.8022	1379056.0506

ROW MARKER IRON PIN AND CAP-E

ALIGN	STATION	OFFSET	NORTH	EAST
Y17	12+50.00	-30.63	897933.3964	1380332.7475
Y17	14+20.60	-50.00	897788.3905	1380409.0484
Y17	17+65.00	-60.00	897484.4268	1380571.2694

ROW MARKER IRON PIN AND CAP-E

ALIGN	STATION	OFFSET	NORTH	EAST
Y18	17+50.00	40.00	899440.6209	1381510.9054
Y18	17+50.00	19.98	899449.5670	1381528.8133
Y18	17+50.00	-20.02	899467.4432	1381564.5971
Y18	17+50.00	-45.00	899478.6073	1381586.9450
Y18	21+50.00	-80.00	899142.0629	1381801.9151
Y18	22+00.00	70.00	899026.2620	1381694.2681
Y18	28+50.00	70.00	898462.3262	1382025.2086
Y18	28+50.00	65.00	898464.9776	1382029.4477
Y18	28+90.00	65.00	898430.9106	1382050.8386
Y18	28+90.00	70.00	898428.2444	1382046.6088
Y18	29+50.00	-80.00	898457.9088	1382205.4066
Y18	29+50.00	70.00	898377.2618	1382078.9311
Y18	31+98.08	55.00	898176.5857	1382226.2843
Y18	34+10.77	-60.00	898060.4337	1382438.3467
Y18	35+00.71	55.00	897922.4655	1382390.6160
Y18	35+35.98	-86.53	897966.1878	1382529.9034
Y18	35+81.97	-86.65	897921.7964	1382554.5311
Y18	37+75.00	55.00	897688.5123	1382492.1292
Y18	38+30.00	-40.00	897655.1882	1382596.4094
Y18	39+18.74	45.00	897556.8316	1382523.2620
Y18	39+18.74	-40.00	897562.9624	1382608.0406
Y18	41+00.00	-40.00	897382.1736	1382621.1145
Y18	41+20.00	45.00	897356.0949	1382537.7784
Y18	41+25.00	-30.69	897356.5675	1382613.6352
Y18	42+00.00	22.51	897277.9257	1382565.9844

ROW MARKER IRON PIN AND CAP-E

ALIGN	STATION	OFFSET	NORTH	EAST
Y19	10+65.00	20.73	897695.1808	1382609.1584

ROW MARKER IRON PIN AND CAP-E

ALIGN	STATION	OFFSET	NORTH	EAST
DRIVE1	10+00.00	25.78	898006.8251	1382580.4305
DRIVE1	10+00.00	-24.23	897968.1307	1382612.1123

DATUM DESCRIPTION

THE LOCALIZED COORDINATE SYSTEM DEVELOPED FOR THIS PROJECT IS BASED ON THE STATE PLANE COORDINATES ESTABLISHED BY NCDOT FOR MONUMENT "R2603-1"
WITH NAD 83/95 STATE PLANE GRID COORDINATES OF
NORTHING: 891634.7130(ft) EASTING: 1368845.2810(ft)
ELEVATION: 1108.64(ft)
THE AVERAGE COMBINED GRID FACTOR USED ON THIS PROJECT (GROUND TO GRID) IS: 0.999955442
THE N.C. LAMBERT GRID BEARING AND LOCALIZED HORIZONTAL GROUND DISTANCE FROM "R2603-1" TO -L- STATION 10+38.67 IS
S 69°10'29" W 2127.33'
ALL LINEAR DIMENSIONS ARE LOCALIZED HORIZONTAL DISTANCES
VERTICAL DATUM USED IS NAVD 88

NOTES:

1. *THE SITE CALIBRATION SHOWN IS BASED UPON A NETWORK TIED TO THE HARN (HIGH ACCURACY REFERENCE NETWORK) NAD 83/95 ADJUSTMENT. THIS CALIBRATION WILL ALLOW THE END USER TO WORK WITHIN THE SAME COORDINATE SYSTEM WHEN USING RTK (REAL TIME KINEMATIC) GPS AND A LOCAL BASE STATION. IF ANOTHER SYSTEM SUCH AS VRS (VIRTUAL REFERENCE STATION) IS USED, ADDITIONAL FIELD TIES MAY BE NEEDED TO REDUCE POSSIBLE ERRORS, OR BIASES.*

2. *THE CONTROL DATA FOR THIS PROJECT CAN BE FOUND ELECTRONICALLY BY SELECTING PROJECT CONTROL DATA AT: HTTP://WWW.NCDOT.ORG/DOH/PRECONSTRUCT/HIGHWAY/LOCATION/PROJECT/*

   THE FILES TO BE FOUND ARE AS FOLLOWS:
   R2603_LS_GPSCALIB_DATE.HTML
   R2603_LS_WGS84_DATE.TXT
   R2603_LS_LOCAL_DATE.TXT
   R2603_LS_CONTROL_DATE.TXT

   THE WGS84 AND LOCAL FILES ARE COMMA DELIMITED AND CAN BE USED TO REPRODUCE THE SITE CALIBRATION FOR THE END USER'S GPS EQUIPMENT. IF FURTHER INFORMATION IS NEEDED, PLEASE CONTACT THE LOCATION AND SURVEYS UNIT.

◎ *INDICATES GEODETIC CONTROL MONUMENTS USED OR SET FOR HORIZONTAL PROJECT CONTROL BY THE NCDOT LOCATION AND SURVEYS UNIT.*
PROJECT CONTROL ESTABLISHED USING GLOBAL POSITIONING SYSTEM.
NETWORK ESTABLISHED FROM EXISTING HARN MONUMENTATION
SEE GPS CALIBRATION SHEET FOR HORIZONTAL AND VERTICAL COORDINATE VALUES.

FINAL TABLES

PROJECT REFERENCE NO.	SHEET NO.
R-2603	1C-4
Location and Surveys	

SURVEY CONTROL SHEET R-2603

ROW MARKER PERMANENT EASEMENT-E

ALIGN	STATION	OFFSET	NORTH	EAST
L	10+80.38	-64.00	890952.7157	1366874.6705
L	12+05.00	-48.77	890980.3222	1366997.1414
L	12+05.00	-64.00	890994.6620	1366992.0154
L	20+56.29	-200.40	891409.6438	1367747.7140
L	20+82.94	-214.15	891431.5730	1367768.1861
L	21+10.00	-49.63	891285.7581	1367849.0420
L	21+10.00	-64.00	891299.2879	1367844.2056
L	21+26.68	-64.00	891304.9020	1367859.9111
L	21+60.44	-64.00	891316.2656	1367891.7008
L	23+10.00	-64.00	891366.6085	1368032.5349
L	23+10.00	-49.82	891353.2568	1368037.3076
L	24+16.00	-49.72	891388.8402	1368137.1567
L	25+50.00	-66.00	891449.2765	1368257.8569
L	25+50.00	-49.30	891433.5517	1368263.4780
L	25+80.00	-66.00	891459.3746	1368286.1063
L	25+80.00	-49.21	891443.5617	1368291.7588
L	30+40.00	-128.00	891672.5941	1368698.3944
L	30+62.00	-49.18	891605.7817	1368745.6406
L	30+70.00	-136.00	891690.2254	1368723.9509
L	30+93.00	-49.17	891616.2043	1368774.8360
L	31+20.00	80.00	891503.6599	1368843.7395
L	31+20.00	49.47	891532.4122	1368833.4617
L	32+30.00	-64.00	891676.2833	1368898.8498
L	32+30.00	-49.10	891662.2500	1368903.8662
L	32+65.00	-64.00	891688.0645	1368931.8074
L	32+65.00	-49.08	891674.0134	1368936.8302
L	33+20.00	-65.00	891707.5193	1368983.2614
L	33+20.00	-49.05	891692.4989	1368988.6306
L	33+50.00	-49.03	891702.5819	1369016.8854
L	33+50.00	-65.00	891717.6174	1369011.5108
L	38+35.11	-48.91	891865.7552	1369473.7277
L	40+35.00	-70.00	891952.8987	1369654.8557
L	40+35.00	-49.02	891933.1402	1369661.9186
L	40+64.00	-70.00	891962.6602	1369682.1635
L	40+64.00	-49.03	891942.9164	1369689.2211
L	41+55.00	-78.00	892000.8243	1369765.1605
L	41+55.00	-48.59	891973.1314	1369775.0597
L	41+70.00	-78.00	892005.8733	1369779.2852
L	41+70.00	-48.38	891977.9827	1369789.2550
L	42+70.00	-70.00	892032.0005	1369876.1427
L	42+70.00	-46.98	892010.3247	1369883.8909
L	43+02.00	-46.53	892020.6742	1369914.1744
L	43+02.00	-70.00	892042.7718	1369906.2754
L	43+65.00	-60.00	892054.5613	1369968.9651
L	43+65.00	-45.65	892041.0497	1369973.7950
L	43+72.00	49.74	891953.5813	1370012.4954
L	44+15.00	56.00	891962.1605	1370055.0934
L	44+15.00	-60.00	892071.3915	1370016.0475
L	44+15.00	-44.95	892057.2207	1370021.1130
L	44+35.00	49.55	891974.9668	1370071.7550
L	44+35.00	56.00	891968.8925	1370073.9264
L	45+35.00	-75.00	892125.9085	1370123.9960
L	45+35.00	-44.77	892097.4405	1370134.1723
L	45+45.00	-44.90	892100.9336	1370143.5433
L	45+45.00	-75.00	892129.2746	1370133.4125
L	45+85.00	-45.44	892114.9059	1370181.0275
L	45+85.00	-60.00	892128.6140	1370176.1274
L	45+90.00	49.67	892027.0243	1370217.7517
L	45+90.00	60.00	892017.2994	1370221.2280
L	46+15.00	-60.00	892138.7121	1370204.3768
L	46+15.00	-45.85	892125.3852	1370209.1406
L	46+20.00	49.70	892037.1000	1370246.0091
L	46+20.00	60.00	892027.3975	1370249.4774
L	47+15.00	49.77	892069.0062	1370335.4910
L	47+15.00	61.00	892058.4332	1370339.2704
L	47+36.00	49.79	892076.0591	1370355.2712
L	47+36.00	61.00	892065.5018	1370359.0450
L	48+98.00	88.00	892094.6071	1370520.6800
L	48+98.00	49.92	892130.4676	1370507.8612
L	49+00.00	-65.00	892239.3522	1370471.0630
L	49+40.00	49.95	892144.5735	1370547.4216
L	49+40.00	88.00	892108.7444	1370560.2292
L	49+50.00	-70.00	892260.8906	1370516.4624
L	50+05.00	-70.00	892279.4038	1370568.2529
L	50+05.00	-63.00	892272.8100	1370570.6099
L	51+25.00	-60.93	892311.2545	1370684.3038
L	51+45.00	-80.00	892335.9447	1370696.7174
L	53+50.00	61.00	892280.8159	1370939.8558
L	53+50.00	55.64	892285.6718	1370937.5971
L	53+90.00	63.00	892296.9714	1370978.1365
L	53+90.00	57.06	892302.2924	1370975.5027
L	55+75.00	75.00	892381.5423	1371151.6292
L	55+75.00	62.09	892392.3960	1371144.6456
L	58+05.00	-77.00	892640.4600	1371244.9243
L	58+05.00	-63.00	892629.8533	1371254.0621
L	58+35.43	90.11	892535.0232	1371378.1151
L	58+40.00	-63.00	892652.0942	1371279.3314
L	58+40.00	-77.00	892662.5047	1371269.9708
L	58+77.00	87.00	892566.9191	1371408.2938
L	58+77.00	97.00	892559.6348	1371415.1450
L	58+87.00	86.00	892574.8790	1371415.2507
L	58+87.00	97.00	892566.9121	1371422.8355
L	59+18.62	68.97	892610.1538	1371427.1414
L	59+22.44	83.76	892602.4648	1371440.3961
L	59+40.00	-295.00	892881.3349	1371183.5772
L	59+43.00	168.00	892558.7846	1371515.7496
L	59+64.34	67.51	892645.1300	1371459.4874
L	59+68.08	82.45	892637.6415	1371472.9937
L	59+70.00	-68.95	892743.3676	1371364.6074
L	59+86.00	158.00	892599.8433	1371541.1740
L	59+89.00	-287.00	892904.9754	1371217.2488
L	60+43.00	95.00	892687.5948	1371535.3948
L	60+43.00	83.00	892695.4660	1371526.3370
L	60+71.64	95.00	892710.6268	1371555.0613
L	62+25.52	85.00	892836.2297	1371645.8301
L	62+90.00	-66.61	892982.4643	1371569.9439
L	62+90.00	-82.00	892992.2607	1371558.0739
L	63+15.00	-66.73	893001.8242	1371585.7619
L	63+15.00	-82.00	893011.5421	1371573.9870
L	65+10.00	85.00	893055.6379	1371826.9090
L	65+10.00	70.00	893065.1858	1371815.3402
L	65+10.00	100.00	893046.0901	1371838.4779
L	65+30.00	-78.00	893174.8164	1371713.9245
L	65+30.00	-67.79	893168.3193	1371721.7968
L	65+45.00	85.00	893082.6319	1371849.1873
L	65+45.00	100.00	893073.0841	1371860.7562

ROW MARKER PERMANENT EASEMENT-E

ALIGN	STATION	OFFSET	NORTH	EAST
L	65+45.00	70.00	893092.1798	1371837.6185
L	65+98.22	85.00	893123.6808	1371883.0651
L	66+70.00	-79.00	893284.3598	1371804.2305
L	66+70.00	-68.43	893277.4302	1371812.2117
L	67+58.00	-83.00	893354.4319	1371861.6111
L	67+58.00	-68.85	893344.8333	1371872.0048
L	67+75.00	-68.94	893357.6474	1371883.7882
L	67+75.00	-83.00	893367.2469	1371873.5164
L	68+70.00	-84.00	893438.2514	1371940.7195
L	68+70.00	-69.48	893427.9905	1371950.9952
L	69+45.00	-69.95	893481.9753	1372005.6499
L	69+45.00	-84.00	893492.1571	1371995.9729
L	69+62.00	85.00	893380.9873	1372124.3899
L	69+62.00	98.00	893371.5115	1372133.2898
L	69+74.00	85.00	893388.9415	1372132.8944
L	69+74.00	98.00	893379.4285	1372141.7546
L	70+75.00	70.00	893465.7934	1372195.9439
L	70+75.00	85.00	893454.4639	1372205.7747
L	70+75.00	95.00	893446.9110	1372212.3285
L	71+15.00	95.00	893472.0542	1372241.7160
L	71+15.00	70.00	893491.1631	1372225.5962
L	71+15.00	85.00	893479.6977	1372235.2681
L	72+12.00	85.00	893539.1631	1372308.2267
L	72+15.00	92.00	893535.4582	1372314.8394
L	72+23.00	85.00	893545.7500	1372316.6262
L	72+24.00	89.00	893543.1941	1372319.8522
L	73+58.00	-72.76	893752.6865	1372330.5655
L	73+99.00	-89.00	893790.1234	1372355.8517
L	74+06.00	-230.00	893910.6252	1372282.2659
L	74+33.00	-222.00	893920.3157	1372310.8740
L	74+78.00	70.00	893701.8099	1372509.9911
L	74+79.25	85.00	893689.8726	1372519.1547
L	74+80.00	94.00	893682.7101	1372524.6530
L	76+25.00	-89.00	893914.3405	1372552.9176
L	77+20.00	104.00	893791.5594	1372729.3848
L	77+20.00	70.00	893821.5595	1372713.3849
L	77+20.00	75.77	893816.4719	1372716.0983
L	78+54.00	-100.00	894033.9357	1372757.2199
L	78+54.00	-89.00	894023.9987	1372761.9376
L	78+54.00	92.00	893860.4910	1372839.5664
L	78+55.29	77.87	893873.7967	1372834.6369
L	78+56.00	70.00	893881.2011	1372831.8938
L	78+70.00	-72.82	894016.3762	1372783.7176
L	78+70.00	-93.00	894034.6551	1372775.1638
L	78+70.00	-99.00	894040.0895	1372772.6208
L	78+98.00	96.00	893874.8222	1372879.8384
L	78+99.42	77.66	893892.0838	1372873.4783
L	79+00.00	70.00	893899.2868	1372870.8243
L	79+05.00	-93.00	894049.7705	1372807.9844
L	79+05.00	-86.00	894043.3946	1372810.8737
L	79+26.00	-86.00	894052.2503	1372830.6070
L	79+26.00	-78.00	894044.9397	1372833.8557
L	79+50.00	-78.00	894054.8565	1372856.4253
L	79+50.00	-85.00	894061.2768	1372853.6363
L	80+41.00	-78.00	894090.7343	1372942.7345
L	80+41.00	-85.00	894097.2399	1372940.1504
L	80+41.00	-70.00	894083.2994	1372945.6878
L	81+64.18	90.00	893976.6959	1373117.3594
L	81+65.00	-70.00	894127.5306	1373063.9780
L	81+65.00	-78.00	894135.0584	1373061.2702
L	81+93.00	89.33	893987.0838	1373144.2539
L	82+50.00	88.00	894007.6268	1373197.4399
L	82+95.00	122.00	893990.8650	1373251.2920
L	82+97.00	-107.00	894207.0253	1373175.6633
L	82+97.00	-70.00	894172.2092	1373188.1868
L	83+00.00	110.00	894003.8491	1373251.9352
L	83+11.00	-107.00	894211.7640	1373188.8369
L	83+35.00	145.00	893982.7615	1373296.7159
L	83+35.00	108.25	894017.3424	1373284.2770
L	83+73.00	-70.00	894197.9333	1373259.7010
L	83+73.00	-81.00	894208.2840	1373255.9777
L	84+00.00	105.00	894042.4014	1373344.3403
L	84+55.00	87.00	894077.9551	1373390.0015
L	85+00.00	85.00	894095.0684	1373431.6684
L	85+50.00	95.00	894102.5823	1373482.1019
L	85+78.00	85.00	894121.4694	1373505.0645
L	85+80.00	164.00	894047.8093	1373533.6859
L	86+05.00	180.00	894041.2155	1373562.6259
L	86+31.00	85.00	894139.4085	1373554.9362
L	86+67.00	85.00	894151.5936	1373588.8113
L	86+75.00	-70.00	894300.1526	1373543.8756
L	86+75.00	-78.00	894307.6804	1373541.1678
L	87+35.00	85.00	894174.6099	1373652.7977
L	87+35.00	70.00	894188.7245	1373647.7205
L	88+20.00	-78.00	894356.7592	1373677.6092
L	88+20.00	-70.00	894349.2314	1373680.3170
L	88+96.00	100.00	894214.9897	1373809.3718
L	88+96.00	70.00	894243.2189	1373799.2176
L	88+96.00	85.00	894229.1043	1373804.2947
L	89+00.00	-85.00	894390.4240	1373750.5179
L	89+00.00	-70.00	894376.3094	1373755.5951
L	89+35.00	100.00	894228.1902	1373846.0699
L	89+40.00	-85.00	894403.9630	1373788.1570
L	89+40.00	-70.00	894389.8484	1373793.2341
L	89+65.00	85.00	894252.4590	1373869.2220
L	89+95.00	70.00	894276.7279	1373892.3742
L	91+28.00	97.00	894296.3387	1374026.6627
L	91+28.00	85.00	894307.6304	1374022.6010
L	91+38.00	85.00	894311.0151	1374032.0108
L	91+38.00	97.00	894299.7234	1374036.0725
L	93+40.00	-60.00	894515.8284	1374173.0091
L	93+40.00	-75.00	894529.9431	1374167.9319
L	93+70.00	-60.00	894525.9827	1374201.2383
L	93+70.00	-75.00	894540.0973	1374196.1612
L	94+99.00	97.00	894421.9127	1374375.7647
L	94+99.00	85.00	894433.2044	1374371.7030
L	95+09.00	97.00	894425.2975	1374385.1744
L	95+09.00	85.00	894436.5892	1374381.1127
L	95+55.00	-80.00	894607.4200	1374368.5493
L	95+55.00	-60.00	894588.6005	1374375.3188
L	96+50.00	-85.00	894644.2799	1374456.2496
L	96+55.00	85.00	894486.0065	1374518.4952
L	96+55.00	120.00	894453.0723	1374530.3418

ROW MARKER PERMANENT EASEMENT-E

ALIGN	STATION	OFFSET	NORTH	EAST
L	96+55.00	70.00	894500.1211	1374513.4180
L	97+05.00	70.00	894517.0448	1374560.4668
L	97+05.00	85.00	894502.9302	1374565.5439
L	97+05.00	120.00	894469.9961	1374577.3905
L	98+09.00	97.00	894526.8399	1374667.4671
L	98+09.00	85.00	894538.1316	1374663.4054
L	98+21.00	-80.60	894698.0157	1374618.6419
L	98+21.00	85.00	894542.1933	1374674.6971
L	98+21.00	97.00	894530.9016	1374678.7588
L	101+40.00	105.00	894631.3471	1374981.6378
L	101+40.00	85.00	894650.1666	1374974.8683
L	101+40.00	70.00	894664.2813	1374969.7912
L	105+28.89	95.00	894779.0060	1375345.1893
L	111+75.00	110.00	895013.0270	1375946.9953
L	111+75.00	119.00	895004.6574	1375950.3043
L	113+29.00	110.00	895067.9306	1376089.0596
L	113+29.00	115.00	895063.2531	1376090.8261
L	114+00.00	115.00	895087.8151	1376156.5711
L	114+06.00	127.00	895078.6109	1376166.2879
L	114+13.00	115.00	895092.2618	1376168.6277
L	114+16.00	122.00	895086.7159	1376173.8268
L	115+29.49	115.00	895131.8253	1376277.5259
L	115+87.50	114.00	895152.5023	1376331.7298
L	116+15.00	-105.00	895367.7922	1376283.0725
L	116+15.00	-88.52	895352.2971	1376288.6794
L	116+60.00	-105.00	895383.1038	1376325.3875
L	116+60.00	-88.47	895367.5634	1376331.0108
L	118+00.00	113.00	895225.7474	1376531.2102
L	119+30.00	97.00	895285.0262	1376648.0092
L	120+75.00	97.00	895334.3526	1376784.3289
L	120+75.00	80.00	895350.3401	1376778.5496
L	121+25.00	97.00	895351.1161	1376831.0058
L	121+25.00	80.00	895367.1275	1376825.2931
L	126+01.51	96.00	895502.0235	1377278.9157
L	126+21.76	97.00	895507.0459	1377298.3891
L	129+26.00	107.00	895583.3228	1377590.4042
L	129+26.00	98.00	895591.9823	1377587.9519
L	129+40.00	107.00	895587.0956	1377603.7566
L	129+40.00	100.00	895593.8329	1377601.8571
L	129+40.00	80.00	895613.0826	1377596.4302
L	129+80.77	100.00	895604.7364	1377640.7852
L	131+50.00	92.00	895662.5865	1377804.5233
L	131+60.00	103.00	895655.3314	1377817.6965
L	131+80.00	75.00	895688.3577	1377828.2848
L	132+30.00	75.00	895704.8825	1377876.5137
L	132+30.00	88.00	895692.6122	1377880.8079
L	132+75.00	88.00	895708.0745	1377924.1699
L	132+75.00	75.00	895720.2934	1377919.7315
L	133+09.00	-94.20	895890.7904	1377893.0813
L	133+09.00	-130.00	895924.3258	1377880.5610
L	133+40.00	-118.00	895923.7056	1377912.8600
L	135+73.00	-172.00	896059.9415	1378098.8259
L	135+73.00	-160.00	896049.0162	1378103.7894
L	135+75.00	75.00	895835.9049	1378202.8474
L	135+75.00	90.00	895822.2514	1378209.0589
L	135+85.00	-162.00	896055.6065	1378113.4167
L	135+85.00	-172.00	896064.6979	1378109.2519
L	136+20.00	75.00	895855.1508	1378244.4991
L	136+20.00	90.00	895841.5715	1378250.8711
L	140+70.00	95.00	896056.6458	1378657.5065
L	140+70.00	75.00	896073.7000	1378647.0588
L	141+00.00	95.00	896072.3175	1378683.0878
L	141+00.00	75.00	896089.3716	1378672.6401
L	142+25.00	75.00	896154.6700	1378779.2286
L	142+25.00	100.00	896133.3523	1378792.2883
L	142+75.00	-168.00	896387.9975	1378694.9240
L	142+75.00	100.00	896159.4716	1378834.9237
L	142+75.00	75.00	896180.7893	1378821.8641
L	142+89.00	-205.00	896426.8612	1378687.5336
L	143+07.00	-167.00	896403.8612	1378722.7331
L	143+17.00	-195.00	896432.9609	1378716.6333
L	145+44.58	-160.00	896522.0021	1378928.9782
L	146+00.00	100.00	896329.2474	1379112.0540
L	146+00.00	75.00	896350.5651	1379098.9943
L	146+30.00	75.00	896366.2367	1379124.5756
L	146+30.00	100.00	896344.9190	1379137.6353
L	149+35.00	-130.00	896700.3700	1379277.5624
L	149+90.00	75.00	896554.2960	1379431.5507
L	149+90.00	90.00	896541.5054	1379439.3865
L	150+20.00	75.00	896569.9677	1379457.1319
L	150+20.00	90.00	896557.1770	1379464.9677
L	151+35.00	72.33	896632.3160	1379553.8004
L	151+35.00	85.00	896621.5151	1379560.4173
L	151+65.00	85.00	896637.1867	1379585.9985
L	151+65.00	64.33	896654.8093	1379575.2025
L	154+35.00	95.00	896769.7041	1379821.4537
L	154+35.00	65.00	896795.2853	1379805.7821
L	154+70.00	65.00	896813.5689	1379835.6269
L	154+70.00	95.00	896787.9876	1379851.2985
L	155+34.00	-131.00	897014.1325	1379787.8124
L	155+70.00	-115.00	897019.2951	1379826.8681
L	155+86.00	-137.00	897046.4129	1379829.0189
L	157+00.00	-115.00	897087.2054	1379937.7202
L	157+00.00	-131.00	897100.8488	1379929.3620
L	157+00.00	-138.00	897106.8177	1379925.7053
L	157+25.00	60.00	896951.0411	1380050.4556
L	157+32.00	88.00	896930.8220	1380071.0514
L	157+63.00	60.00	896970.8918	1380082.8585
L	157+63.00	88.00	896947.0160	1380097.4854
L	158+60.00	90.00	896995.9821	1380181.2429
L	158+60.00	60.00	897021.5633	1380165.5713
L	158+90.00	60.00	897037.2350	1380191.1525
L	158+90.00	90.00	897011.6537	1380206.8241
L	159+75.00	60.00	897081.6378	1380263.6328
L	159+75.00	85.00	897060.3201	1380276.6924
L	160+10.00	85.00	897078.6037	1380306.5372
L	160+10.00	61.00	897099.0687	1380293.9999
L	161+94.00	93.00	897167.9012	1380467.6147
L	162+02.00	70.00	897191.6926	1380462.4215
L	162+04.00	96.00	897170.5670	1380477.7089
L	162+13.00	70.00	897197.4389	1380471.8013
L	162+50.00	-132.00	897389.0143	1380397.8293
L	164+60.00	95.00	897305.1507	1380695.4799
L	164+60.00	70.00	897326.4684	1380682.4203

ROW MARKER PERMANENT EASEMENT-E

ALIGN	STATION	OFFSET	NORTH	EAST
L	165+00.00	95.00	897326.0462	1380729.5883
L	165+00.00	70.00	897347.3639	1380716.5286
L	170+25.00	-95.00	897762.3140	1381078.0067
L	170+60.00	70.00	897639.9006	1381194.0454
L	170+60.00	90.00	897622.8465	1381204.4931
L	171+05.00	90.00	897646.3539	1381242.8650
L	171+20.00	70.00	897671.2439	1381245.2079
L	171+75.00	-80.00	897827.8814	1381213.7488
L	172+00.00	-95.00	897853.7317	1381227.2307
L	172+25.00	-110.00	897879.5820	1381240.7126
L	172+65.00	-115.00	897904.7411	1381272.2090
L	172+82.14	-95.00	897896.6421	1381297.2746
L	172+95.00	-80.00	897890.5679	1381316.0738
L	173+75.00	-95.00	897945.1494	1381376.4547
L	173+87.00	-108.00	897962.5033	1381379.8962
L	174+00.00	-95.00	897958.2091	1381397.7724
L	178+85.10	-95.00	898211.6207	1381811.4240
L	179+78.72	78.92	898110.0643	1381980.9335
L	179+79.55	108.91	898084.4819	1381996.6032
L	180+19.61	77.62	898130.9572	1382015.0434
L	180+20.80	107.59	898105.3747	1382030.7131
L	180+92.00	-96.28	898318.3351	1381995.2180
L	180+92.00	-108.00	898328.6760	1381989.6958
L	181+02.00	-96.66	898323.4972	1382004.1087
L	181+02.00	-108.00	898333.5189	1381998.7960
L	181+75.00	100.00	898182.3316	1382159.2413
L	181+75.00	71.98	898207.3532	1382146.6328
L	181+75.00	105.00	898177.8665	1382161.4913
L	181+82.89	-100.82	898365.3133	1382076.1285
L	183+43.94	-102.00	898437.1863	1382225.4349
L	183+68.00	110.00	898252.8783	1382332.9128
L	185+48.00	-96.00	898511.2749	1382421.8092
L	185+50.00	-110.00	898525.1030	1382418.8055
L	185+60.00	-96.00	898515.6007	1382433.3546
L	185+61.00	-109.00	898528.1420	1382429.7806
L	187+40.00	-110.00	898589.0586	1382604.0217
L	187+40.00	-101.00	898580.4749	1382606.7272
L	187+52.00	-110.00	898592.7592	1382615.8327
L	187+52.00	-101.00	898584.1663	1382618.5088
L	189+05.00	-94.00	898620.9058	1382771.5664
L	189+05.00	-111.00	898637.3423	1382767.2256
L	189+15.00	-111.00	898639.9624	1382777.2045
L	189+15.00	-94.00	898623.5136	1382781.4983
L	191+12.00	-90.00	898670.0007	1382972.0382
L	193+22.00	-95.00	898730.7827	1383171.9607
L	194+70.00	-70.00	898747.6678	1383320.4177
L	194+70.00	-49.50	898727.9969	1383326.1926
L	194+80.00	-109.00	898787.8907	1383318.9669
L	194+85.00	-73.00	898754.7602	1383333.9039
L	194+88.00	-49.65	898733.2094	1383343.3692
L	195+30.00	-49.94	898745.3718	1383383.4468
L	195+30.00	-80.00	898774.1848	1383374.8815

DATUM DESCRIPTION

THE LOCALIZED COORDINATE SYSTEM DEVELOPED FOR THIS PROJECT IS BASED ON THE STATE PLANE COORDINATES ESTABLISHED BY NCDOT FOR MONUMENT "R2603-1"
WITH NAD 83/95 STATE PLANE GRID COORDINATES OF
NORTHING: 891634.7130(ft) EASTING: 1368845.2810(ft)
ELEVATION: 1108.64(ft)
THE AVERAGE COMBINED GRID FACTOR USED ON THIS PROJECT (GROUND TO GRID) IS: 0.999955442
THE N.C. LAMBERT GRID BEARING AND LOCALIZED HORIZONTAL GROUND DISTANCE FROM "R2603-1" TO -L- STATION 10+38.67 IS
S 69°10'29" W 2127.33'
ALL LINEAR DIMENSIONS ARE LOCALIZED HORIZONTAL DISTANCES
VERTICAL DATUM USED IS NAVD 88

NOTES:

1. *THE SITE CALIBRATION SHOWN IS BASED UPON A NETWORK TIED TO THE HARN (HIGH ACCURACY REFERENCE NETWORK) NAD 83/95 ADJUSTMENT. THIS CALIBRATION WILL ALLOW THE END USER TO WORK WITHIN THE SAME COORDINATE SYSTEM WHEN USING RTK (REAL TIME KINEMATIC) GPS AND A LOCAL BASE STATION. IF ANOTHER SYSTEM SUCH AS VRS (VIRTUAL REFERENCE STATION) IS USED, ADDITIONAL FIELD TIES MAY BE NEEDED TO REDUCE POSSIBLE ERRORS, OR BIASES.*

2. *THE CONTROL DATA FOR THIS PROJECT CAN BE FOUND ELECTRONICALLY BY SELECTING PROJECT CONTROL DATA AT:*
HTTP://WWW.NCDOT.ORG/DOH/PRECONSTRUCT/HIGHWAY/LOCATION/PROJECT/

   THE FILES TO BE FOUND ARE AS FOLLOWS:
   R2603_LS_GPSCALIB_DATE.HTML
   R2603_LS_WGS84_DATE.TXT
   R2603_LS_LOCAL_DATE.TXT
   R2603_LS_CONTROL_DATE.TXT

   THE WGS84 AND LOCAL FILES ARE COMMA DELIMITED AND CAN BE USED TO REPRODUCE THE SITE CALIBRATION FOR THE END USER'S GPS EQUIPMENT. IF FURTHER INFORMATION IS NEEDED, PLEASE CONTACT THE LOCATION AND SURVEYS UNIT.

◎ *INDICATES GEODETIC CONTROL MONUMENTS USED OR SET FOR HORIZONTAL PROJECT CONTROL BY THE NCDOT LOCATION AND SURVEYS UNIT.*
PROJECT CONTROL ESTABLISHED USING GLOBAL POSITIONING SYSTEM.
NETWORK ESTABLISHED FROM EXISTING HARN MONUMENTATION
SEE GPS CALIBRATION SHEET FOR HORIZONTAL AND VERTICAL COORDINATE VALUES.

FINAL TABLES

7/31/2015
r:\roadway\proj\R2603_ls_1c-4.dgn
10:48:24 AM

SURVEY CONTROL SHEET R–2603

ROW MARKER PERMANENT EASEMENT-E

ALIGN	STATION	OFFSET	NORTH	EAST
Y1	18+50.00	-49.69	890504.1099	1367206.0858
Y1	18+50.00	-63.00	890507.5810	1367193.2415
Y1	18+60.00	-49.72	890514.1731	1367208.8213
Y1	18+60.00	-63.00	890517.7468	1367196.0358
Y1	22+34.04	56.00	890807.3515	1367459.5963
Y1	23+14.23	61.99	890865.3446	1367509.2310
Y1	23+60.00	80.00	890887.2804	1367550.3296
Y1	23+60.00	100.00	890874.3444	1367565.5828
Y1	23+76.36	63.00	890910.0062	1367547.4556
Y1	26+32.00	65.00	891071.6477	1367726.2919
Y1	29+00.00	80.00	891182.7427	1367951.5264
Y1	29+00.00	70.62	891191.3776	1367947.8539
Y1	29+16.00	80.00	891188.4784	1367965.2749
Y1	29+17.92	54.27	891212.9815	1367957.2317

ROW MARKER PERMANENT EASEMENT-E

ALIGN	STATION	OFFSET	NORTH	EAST
Y1A	21+65.00	-50.08	890805.7329	1367333.0089
Y1A	21+68.00	-66.00	890816.3635	1367320.7800
Y1A	21+87.78	-88.74	890844.9200	1367311.1457
Y1A	21+93.63	-49.56	890830.1799	1367347.9144
Y1A	22+54.31	-46.71	890881.1129	1367381.0178
Y1A	22+57.77	-67.60	890894.6578	1367364.7302
Y1A	22+73.62	-79.81	890914.4969	1367362.1985
Y1A	22+74.68	-45.66	890898.1644	1367392.2090
Y1A	23+00.96	-44.30	890920.1696	1367406.6513

ROW MARKER PERMANENT EASEMENT-E

ALIGN	STATION	OFFSET	NORTH	EAST
Y2	16+26.00	61.00	890990.4191	1367410.9797
Y2	16+39.00	52.32	890998.1035	1367422.2649
Y2	16+43.00	76.00	890974.2224	1367422.5785
Y2	16+53.33	68.50	890980.5295	1367431.4045
Y2	18+71.26	29.70	890922.6090	1367611.2240
Y2	19+30.00	-89.00	890975.1209	1367732.8103
Y2	19+35.00	-31.76	890928.2352	1367699.5901
Y2	19+61.00	-61.00	890933.7147	1367738.3351

ROW MARKER PERMANENT EASEMENT-E

ALIGN	STATION	OFFSET	NORTH	EAST
L	23+57.45	-118.35	891433.7553	1368058.9212
Y3	10+10.00	-23.31	891414.6410	1368087.2475

ROW MARKER PERMANENT EASEMENT-E

ALIGN	STATION	OFFSET	NORTH	EAST
Y7	13+46.00	129.00	892462.9209	1370687.4737
Y7	13+54.00	145.00	892453.5908	1370659.4506

ROW MARKER PERMANENT EASEMENT-E

ALIGN	STATION	OFFSET	NORTH	EAST
Y9	11+15.00	-64.00	893955.5368	1373137.7020
Y9	12+46.00	70.28	893770.1324	1373063.8828
Y9	12+47.17	68.42	893769.0490	1373067.0511
Y9	12+48.00	118.00	893736.2776	1373029.7722
Y9	12+50.00	113.00	893734.4463	1373037.8626
Y9	12+50.00	127.00	893725.2004	1373027.3501
Y9	12+52.00	122.00	893723.4286	1373035.7504
Y9	12+67.00	212.00	893613.3613	1373032.4902
Y9	12+70.00	215.31	893603.1340	1373044.9998
Y9	12+70.78	213.06	893603.3910	1373049.7020
Y9	13+26.00	-57.00	893854.2539	1373176.1615

ROW MARKER PERMANENT EASEMENT-E

ALIGN	STATION	OFFSET	NORTH	EAST
Y11	11+42.00	30.00	894867.9335	1374586.3379

ROW MARKER PERMANENT EASEMENT-E

ALIGN	STATION	OFFSET	NORTH	EAST
Y16	10+34.00	29.49	896885.9056	1378978.2786
Y16	11+05.00	45.00	896814.0171	1378967.6214
Y16	11+05.00	28.98	896815.1038	1378983.6049
Y16	12+68.87	-51.00	896657.0387	1379074.5159
Y16	12+69.03	-31.37	896655.5430	1379054.9425
Y16	13+13.00	-80.00	896621.7093	1379107.0064

ROW MARKER PERMANENT EASEMENT-E

ALIGN	STATION	OFFSET	NORTH	EAST
Y17	14+04.00	46.83	897761.0108	1380314.7069
Y17	14+68.00	92.00	897682.7516	1380302.9780
Y17	14+68.00	76.00	897689.8720	1380317.3063
Y17	14+82.00	81.00	897675.1096	1380319.0591
Y17	14+82.00	92.00	897670.2143	1380309.2084
Y17	17+50.00	-59.56	897497.6657	1380564.2040

ROW MARKER PERMANENT EASEMENT-E

ALIGN	STATION	OFFSET	NORTH	EAST
Y18	16+90.00	-20.13	899521.1451	1381538.0726
Y18	16+90.00	-35.00	899527.7195	1381551.4066
Y18	17+22.19	19.89	899474.5407	1381516.4783
Y18	17+50.00	-35.00	899474.1383	1381577.9992
Y18	17+50.00	31.69	899444.3358	1381518.3417
Y18	21+00.00	61.83	899118.5176	1381653.3960
Y18	21+00.00	76.88	899111.3879	1381640.1485
Y18	21+25.00	78.84	899088.3061	1381650.3745
Y18	21+25.00	63.79	899095.4658	1381663.6087
Y18	25+50.00	85.00	898712.6569	1381855.5872
Y18	25+50.00	70.00	898720.2769	1381868.5075
Y18	25+80.00	85.00	898686.6452	1381870.9737
Y18	25+80.00	70.00	898694.2989	1381883.8742
Y18	31+70.00	62.48	898196.1024	1382204.7523
Y18	34+50.00	55.00	897965.0444	1382363.0816
Y18	34+50.00	75.00	897954.1840	1382346.2872
Y18	34+75.00	75.00	897933.1910	1382359.8627
Y18	34+85.00	55.00	897935.6542	1382382.0873
Y18	36+47.00	-75.55	897852.4665	1382574.7029
Y18	37+59.00	55.00	897702.9749	1382488.3692
Y18	37+59.00	64.00	897700.6268	1382479.6809
Y18	38+00.00	54.94	897665.7894	1382497.5015
Y18	38+00.00	63.00	897664.0726	1382489.6299
Y18	38+70.00	-40.00	897613.7721	1382602.8685

ROW MARKER PERMANENT EASEMENT-E

ALIGN	STATION	OFFSET	NORTH	EAST
Y19	10+44.20	-37.00	897751.4589	1382584.7043
Y19	10+64.00	47.00	897668.9009	1382609.8446
Y19	10+90.00	-24.49	897741.9058	1382631.2081
Y19	10+90.00	-41.00	897758.3867	1382630.1493
Y19	12+00.00	-47.00	897771.1262	1382741.3341
Y19	12+56.00	29.00	897693.7656	1382796.2451
Y19	12+56.00	-44.00	897766.5394	1382801.9873
Y19	12+57.00	-31.78	897754.2716	1382802.0822
Y19	13+05.00	-21.29	897738.2050	1382849.8972
Y19	13+09.00	45.00	897671.9417	1382845.4677
Y19	13+13.00	26.69	897689.6023	1382851.7555
Y19	13+15.00	-64.00	897779.3036	1382865.2268
Y19	13+46.00	-12.87	897724.6563	1382889.5000
Y19	13+54.00	-56.00	897766.4278	1382902.8993

L

TYPE	STATION	NORTH	EAST
POT	10+00.00	890865.3930	1366820.5205
PC	51+98.08	892278.4805	1370773.6303
PT	60+84.97	892781.9340	1371490.8099
PC	65+98.22	893177.7852	1371817.5083
PT	81+35.16	894051.5632	1373059.5952
PC	101+87.26	894746.1473	1374990.5724
PRC	108+37.10	894985.8062	1375594.4768
PT	114+67.98	895219.0323	1376180.5510
PC	120+71.22	895424.2913	1376747.8026
PRC	129+80.77	895701.0762	1377613.9776
PT	140+43.69	896123.9087	1378585.4443
PC	178+84.93	898130.5209	1381860.8998
PRC	189+18.60	898533.4695	1382808.7268
PCC	198+03.53	898777.4702	1383659.2488
PT	202+93.26	898961.4641	1384112.5281
POT	202+94.26	898961.9141	1384113.4211

Y1

TYPE	STATION	NORTH	EAST
POT	10+00.00	889651.8758	1367295.6362
PC	11+83.03	889831.1209	1367258.6216
PCC	13+90.29	890035.4239	1367223.9918
PT	29+68.27	891281.2169	1367983.7871
POT	32+32.91	891370.2977	1368232.9904

Y1A

TYPE	STATION	NORTH	EAST
POT	21+58.06	890774.4544	1367372.7264
PC	23+88.84	890973.6442	1367489.2687
PT	27+72.80	891213.8018	1367778.8538
POT	32+53.11	891375.4767	1368231.1391

Y2

TYPE	STATION	NORTH	EAST
POT	10+00.00	890865.3930	1366820.5205
PC	15+02.33	891034.4803	1367293.5419
PT	18+16.39	890980.7502	1367588.6029
POT	19+88.82	890869.2024	1367720.0854

Y3

TYPE	STATION	NORTH	EAST
POT	10+00.00	891415.2564	1368061.8868
POT	11+00.00	891322.4244	1368099.0650

Y4

TYPE	STATION	NORTH	EAST
POT	10+00.00	891553.5595	1368448.6146
POT	11+00.00	891459.9245	1368483.7212

Y5

TYPE	STATION	NORTH	EAST
POT	10+00.00	891878.8840	1369359.1332
POT	11+00.00	891786.7358	1369397.9753

Y6

TYPE	STATION	NORTH	EAST
POT	10+00.00	892318.8154	1370299.4422
POT	12+00.00	892143.1612	1370395.0748

Y7

TYPE	STATION	NORTH	EAST
POT	10+00.00	892637.0373	1370797.4450
PC	11+55.45	892507.1821	1370882.8945
PT	12+55.75	892421.0100	1370860.5363
PC	13+23.25	892389.7785	1370800.7022
PT	14+16.47	892310.2056	1370769.5978
POT	14+47.69	892280.8156	1370780.1421

Y8

TYPE	STATION	NORTH	EAST
POT	10+00.00	893234.4698	1371462.0764
PC	10+77.54	893161.5924	1371435.5873
PCC	11+74.05	893069.7741	1371405.9274
PT	14+33.69	892824.9854	1371456.0061
POT	14+89.05	892781.9340	1371490.8099

Y9

TYPE	STATION	NORTH	EAST
POT	10+00.00	894044.7977	1373040.9885
PC	12+29.81	893826.4806	1373112.7588
PT	13+07.25	893794.2627	1373174.8185
POT	13+34.15	893802.0976	1373200.5570

Y10

TYPE	STATION	NORTH	EAST
POT	10+00.00	894667.8890	1373886.8559
POT	13+00.00	894383.6346	1373982.7698

Y11

TYPE	STATION	NORTH	EAST
POT	10+00.00	895001.7890	1374539.7158
PC	10+29.59	894977.6540	1374556.8395
PT	12+48.35	894781.1975	1374650.5936
POT	13+96.79	894638.2744	1374690.6805

Y12

TYPE	STATION	NORTH	EAST
POT	10+00.00	894893.5700	1375375.3351
PC	13+02.15	894652.2837	1375557.2054
PT	16+25.02	894434.4377	1375793.1539
PC	17+22.32	894382.2461	1375875.2727
PT	18+97.52	894303.2088	1376031.3219
POT	19+19.82	894295.1138	1376052.1008

Y13

TYPE	STATION	NORTH	EAST
POT	10+00.00	895595.9068	1377257.4965
PC	11+01.97	895498.5594	1377287.8625
PT	12+08.15	895393.6982	1377291.7369
POT	12+09.15	895392.7242	1377291.5104

Y14

TYPE	STATION	NORTH	EAST
POT	10+00.00	896003.3207	1378373.7303
PC	10+39.70	895968.2167	1378392.2679
PT	10+92.86	895916.6460	1378400.2530
POT	11+12.64	895897.1732	1378396.7373

Y15

TYPE	STATION	NORTH	EAST
POT	10+00.00	896722.2884	1379018.9618
POT	11+75.00	896710.4177	1378844.3649

Y16

TYPE	STATION	NORTH	EAST
POT	8+00.00	897121.3671	1378991.8287
PC	12+81.82	896640.6579	1379024.5118
PT	14+62.48	896470.2001	1379078.8824
POT	15+00.00	896438.2065	1379098.4823

Y17

TYPE	STATION	NORTH	EAST
POT	10+00.00	898167.3023	1380240.9903
PC	12+31.31	897943.2371	1380298.4122
PT	14+20.60	897766.1392	1380364.2725
POT	18+93.56	897342.5989	1380574.7502

Y18

TYPE	STATION	NORTH	EAST
POT	10+00.00	900057.9632	1381105.8107
PC	10+01.00	900057.3074	1381106.5656
PRC	16+66.26	899533.5478	1381509.5371
PT	30+23.44	898353.0990	1382177.6366
PC	35+00.71	897952.3316	1382436.8006
PT	39+18.74	897560.0773	1382568.1448
POT	43+70.61	897109.3860	1382600.7368

Y19

TYPE	STATION	NORTH	EAST
POT	10+00.00	897711.7010	1382542.9630
PC	11+79.84	897723.2307	1382722.4291
PT	12+81.73	897720.0336	1382824.1179
POT	13+90.00	897706.3187	1382931.5156

Y20

TYPE	STATION	NORTH	EAST
POT	10+00.00	893096.9159	1371279.0083
PC	10+90.29	893030.6850	1371340.3748
PT	11+49.41	893005.3434	1371392.3006
POT	11+49.68	893005.3205	1371392.5699

DRIVE1

TYPE	STATION	NORTH	EAST
POT	10+00.00	897986.8781	1382596.7625
PC	10+28.90	897968.5721	1382574.4044
PT	11+21.21	897916.9975	1382498.0005
POT	11+55.70	897900.4195	1382467.7592

DATUM DESCRIPTION

THE LOCALIZED COORDINATE SYSTEM DEVELOPED FOR THIS PROJECT IS BASED ON THE STATE PLANE COORDINATES ESTABLISHED BY NCDOT FOR MONUMENT "R2603-1"
WITH NAD 83/95 STATE PLANE GRID COORDINATES OF
NORTHING: 891634.7130(ft) EASTING: 1368845.2810(ft)
ELEVATION: 1108.64(ft)
THE AVERAGE COMBINED GRID FACTOR USED ON THIS PROJECT (GROUND TO GRID) IS: 0.999955442
THE N.C. LAMBERT GRID BEARING AND LOCALIZED HORIZONTAL GROUND DISTANCE FROM "R2603-1" TO -L- STATION 10+38.67 IS
S 69°10'29" W 2127.33'
ALL LINEAR DIMENSIONS ARE LOCALIZED HORIZONTAL DISTANCES
VERTICAL DATUM USED IS NAVD 88

FINAL TABLES

NOTES:

1. *THE SITE CALIBRATION SHOWN IS BASED UPON A NETWORK TIED TO THE HARN (HIGH ACCURACY REFERENCE NETWORK) NAD 83/95 ADJUSTMENT. THIS CALIBRATION WILL ALLOW THE END USER TO WORK WITHIN THE SAME COORDINATE SYSTEM WHEN USING RTK (REAL TIME KINEMATIC) GPS AND A LOCAL BASE STATION. IF ANOTHER SYSTEM SUCH AS VRS (VIRTUAL REFERENCE STATION) IS USED, ADDITIONAL FIELD TIES MAY BE NEEDED TO REDUCE POSSIBLE ERRORS, OR BIASES.*

2. *THE CONTROL DATA FOR THIS PROJECT CAN BE FOUND ELECTRONICALLY BY SELECTING PROJECT CONTROL DATA AT: HTTP://WWW.NCDOT.ORG/DOH/PRECONSTRUCT/HIGHWAY/LOCATION/PROJECT/*

   THE FILES TO BE FOUND ARE AS FOLLOWS:
   R2603_LS_GPSCALIB_DATE.HTML
   R2603_LS_WGS84_DATE.TXT
   R2603_LS_LOCAL_DATE.TXT
   R2603_LS_CONTROL_DATE.TXT

   THE WGS84 AND LOCAL FILES ARE COMMA DELIMITED AND CAN BE USED TO REPRODUCE THE SITE CALIBRATION FOR THE END USER'S GPS EQUIPMENT. IF FURTHER INFORMATION IS NEEDED, PLEASE CONTACT THE LOCATION AND SURVEYS UNIT.

◎ *INDICATES GEODETIC CONTROL MONUMENTS USED OR SET FOR HORIZONTAL PROJECT CONTROL BY THE NCDOT LOCATION AND SURVEYS UNIT.*
PROJECT CONTROL ESTABLISHED USING GLOBAL POSITIONING SYSTEM.
NETWORK ESTABLISHED FROM EXISTING HARN MONUMENTATION
SEE GPS CALIBRATION SHEET FOR HORIZONTAL AND VERTICAL COORDINATE VALUES.

7/31/2015
r:\roadway\proj\R2603_ls_1c-5.dgn
10:48:28 AM

DocuSign Envelope ID: DA518730-DB21-4CE9-928C-9D938A62EA59

5/14/99

PROJECT REFERENCE NO.	SHEET NO.
R-2603	2A-1

ROADWAY DESIGN ENGINEER
NORTH CAROLINA PROFESSIONAL SEAL 19724 ENGINEER DAVID BURKE EVANS
8/10/2015

PAVEMENT DESIGN ENGINEER
NORTH CAROLINA PROFESSIONAL SEAL 031484 ENGINEER VLADIMIR MELNITCHENKO
8/3/2015

M A Engineering Consultants, Inc.
NC License: F-0160
598 East Chatham Street Suite 137 Cary, NC 27511
Phone: 919.297.0220 Fax: 919.297.0221

PAVEMENT SCHEDULE

(FINAL PAVEMENT DESIGN)

C1	PROP. APPROX. 3″ ASPHALT CONCRETE SURFACE COURSE, TYPE S9.5C, AT AN AVERAGE RATE OF 168 LBS. PER SQ. YARD IN EACH OF TWO LAYERS.	K	BASE TO BE TREATED WITH LIME (METHOD-SLURRY) TO A DEPTH OF 8″, AT A RATE OF 20 LBS. PER SQ. YD. AS DIRECTED BY THE ENGINEER. OR BASE TO BE TREATED WITH CEMENT TO A DEPTH OF 7″, AT A RATE OF 55 LBS. PER SQ. YD. AS DIRECTED BY THE ENGINEER.
C2	PROP. VAR. DEPTH ASPHALT CONCRETE SURFACE COURSE, TYPE S9.5C, AT AN AVERAGE RATE OF 112 LBS. PER SQ. YARD PER 1″ DEPTH, TO BE PLACED IN LAYERS NOT LESS THAN 1.5″ OR GREATER THAN 2″ IN DEPTH.		
C3	PROP. APPROX. 3″ ASPHALT CONCRETE SURFACE COURSE, TYPE S9.5B, AT AN AVERAGE RATE OF 168 LBS. PER SQ. YARD IN EACH OF TWO LAYERS.	L	BASE TO BE STABILIZED WITH 200 TO 400 LBS PER SQ. YD. OF STABILIZER AGGREGATE MIXED WITH THE TOP 3″ OF SUBGRADE AT LOCATIONS DIRECTED BY THE ENGINEER.
C4	PROP. VAR. DEPTH ASPHALT CONCRETE SURFACE COURSE, TYPE S9.5B, AT AN AVERAGE RATE OF 112 LBS. PER SQ. YARD PER 1″ DEPTH, TO BE PLACED IN LAYERS NOT LESS THAN 1.5″ OR GREATER THAN 2″ IN DEPTH.	N	GEOTEXTILE FOR PAVEMENT STABILIZATION
D1	PROP. APPROX. 4″ ASPHALT CONCRETE INTERMEDIATE COURSE, TYPE I19.0C, AT AN AVERAGE RATE OF 456 LBS. PER SQ. YARD.	P	PRIME COAT AT THE RATE OF .35 GAL. PER SQ. YD.
D2	PROP. APPROX. 2.5″ ASPHALT CONCRETE INTERMEDIATE COURSE, TYPE I19.0C, AT AN AVERAGE RATE OF 285 LBS. PER SQ. YARD.	R1	2′-6″ CONCRETE CURB & GUTTER
D3	PROP. VAR. DEPTH ASPHALT CONCRETE INTERMEDIATE COURSE, TYPE I19.0C, AT AN AVERAGE RATE OF 114 LBS. PER SQ. YARD PER 1″ DEPTH TO BE PLACED IN LAYERS NOT LESS THAN 2.5″ IN DEPTH OR GREATER THAN 4″ IN DEPTH.	R2	1′-6″ CONCRETE CURB & GUTTER
D4	PROP. APPROX. 4″ ASPHALT CONCRETE INTERMEDIATE COURSE, TYPE I19.0B, AT AN AVERAGE RATE OF 456 LBS. PER SQ. YARD.	R3	2′-9″ CONCRETE CURB & GUTTER
D5	PROP. VAR. DEPTH ASPHALT CONCRETE INTERMEDIATE COURSE, TYPE I19.0B, AT AN AVERAGE RATE OF 114 LBS. PER SQ. YARD PER 1″ DEPTH TO BE PLACED IN LAYERS NOT LESS THAN 2.5″ IN DEPTH OR GREATER THAN 4″ IN DEPTH.	R4	5″ MONOLITHIC CONCRETE ISLAND (KEYED IN)
E1	PROP. APPROX. 5″ ASPHALT CONCRETE BASE COURSE, TYPE B25.0C, AT AN AVERAGE RATE OF 570 LBS. PER SQ. YARD.	S	4″ CONCRETE SIDEWALK
E2	PROP. APPROX. 4″ ASPHALT CONCRETE BASE COURSE, TYPE B25.0C, AT AN AVERAGE RATE OF 456 LBS. PER SQ. YARD.	T	EARTH MATERIAL
E3	PROP. APPROX. 3″ ASPHALT CONCRETE BASE COURSE, TYPE B25.0C, AT AN AVERAGE RATE OF 342 LBS. PER SQ. YARD.	U	EXISTING PAVEMENT
E4	PROP. VAR. DEPTH ASPHALT CONCRETE BASE COURSE, TYPE B25.0C, AT AN AVERAGE RATE OF 114 LBS. PER SQ. YARD PER 1″ DEPTH TO BE PLACED IN LAYERS NOT LESS THAN 3″ IN DEPTH OR GREATER THAN 5.5″ IN DEPTH.	V	MILLING ASPHALT PAVEMENT, 2.5″ DEPTH
E5	PROP. APPROX. 4″ ASPHALT CONCRETE BASE COURSE, TYPE B25.0B, AT AN AVERAGE RATE OF 456 LBS. PER SQ. YARD.	W1	WEDGING (VARIABLE DEPTH ASPHALT PAVEMENT, SEE DETAIL ON THIS SHEET)
E6	PROP. VAR. DEPTH ASPHALT CONCRETE BASE COURSE, TYPE B25.0B, AT AN AVERAGE RATE OF 114 LBS. PER SQ. YARD PER 1″ DEPTH TO BE PLACED IN LAYERS NOT LESS THAN 3″ IN DEPTH OR GREATER THAN 5.5″ IN DEPTH.	W2	WEDGING (VARIABLE DEPTH ASPHALT PAVEMENT, SEE DETAIL ON THIS SHEET)
J1	8″ AGGREGATE BASE COURSE	W3	WEDGING (VARIABLE DEPTH ASPHALT PAVEMENT, SEE DETAIL ON THIS SHEET)

PAVEMENT EDGE SLOPES ARE 1:1 UNLESS SHOWN OTHERWISE.

DETAIL W1

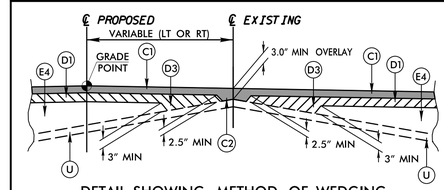

DETAIL SHOWING METHOD OF WEDGING FOR –L–, –Y1–, –Y1A–, –Y2–, –Y3–, –Y5–, –Y11–

DETAIL W2

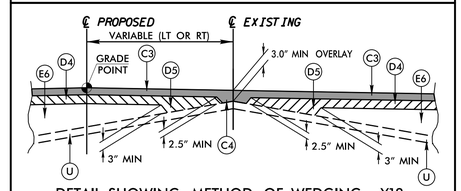

DETAIL SHOWING METHOD OF WEDGING –Y18–

DETAIL W3

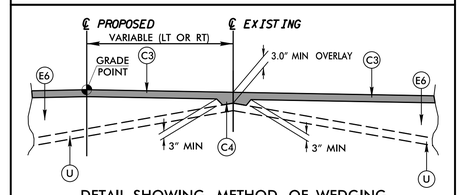

DETAIL SHOWING METHOD OF WEDGING FOR –Y7–, –Y8–, –Y12–, –Y16–, –Y17–, –Y19

MILLED BUTT JOINT TIE–IN DETAIL (PROFILE)

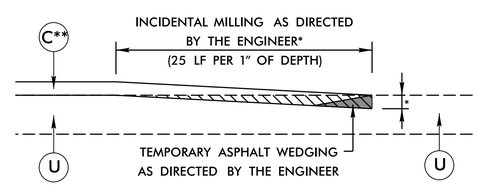

* MILL DEPTH AS SHOWN ON PLANS OR AS DIRECTED BY THE ENGINEER

** SEE TYPICALS FOR MIX TYPE

GEOTEXTILE FOR PAVEMENT STABILIZATION DETAIL

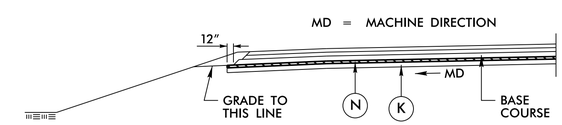

USE GEOTEXTILE FOR PAVEMENT STABILIZATION DETAIL IN CONJUNCTION WITH APPROPRIATE TYPICAL SECTIONS AT LOCATIONS NOTED BELOW.

LINE	STATION	STATION	LOCATION
–L–	59+00	61+00	RT
–L–	75+00	79+00	RT
–L–	95+75	99+50	RT
–L–	180+25	181+25	LT

SEE SHEET 3G–1 FOR ADDITIONAL INFORMATION.

7/2/2015
r:\Roadway\Proj\R2603_Rdy_typ.dgn
bmelnitchenko

DocuSign Envelope ID: DA518730-DB21-4CE9-928C-9D938A62EA59

5/14/99

PROJECT REFERENCE NO.	SHEET NO.
R-2603	2A-2

ROADWAY DESIGN ENGINEER
NORTH CAROLINA PROFESSIONAL SEAL 19724 ENGINEER DAVID BURKE EVANS
DocuSigned by: 8/10/2015

PAVEMENT DESIGN ENGINEER
NORTH CAROLINA PROFESSIONAL SEAL 031484 ENGINEER VLADIMIR MITCHEV
DocuSigned by: 8/3/2015

M A Engineering Consultants, Inc.
NC License: F-0160
598 East Chatham Street Suite 137 Cary, NC 27511
Phone: 919.297.0220 Fax: 919.297.0221

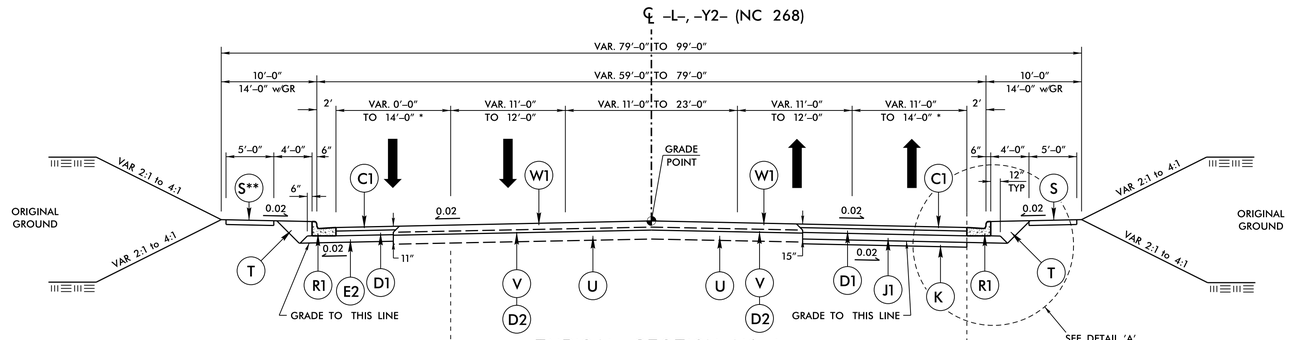

TYPICAL SECTION NO. 1

USE TYPICAL SECTION NO. 1:

FROM -L- STA. 10+38.67 TO 14+65.00
FROM -L- STA. 25+00.00 TO 57+00.00
FROM -Y2- STA. 14+65.00 TO 17+14.58

NOTE: USE 11" ALL ASPHALT PAVEMENT DESIGN FOR NARROW WIDENING AREAS LESS THAN 6' IN WIDTH.

- 14' OUTSIDE LANES TO ACCOMMODATE BICYCLES
- ** SIDEWALK ON LEFT SIDE: FROM -L- STA. 48+16.36 TO 57+00.00

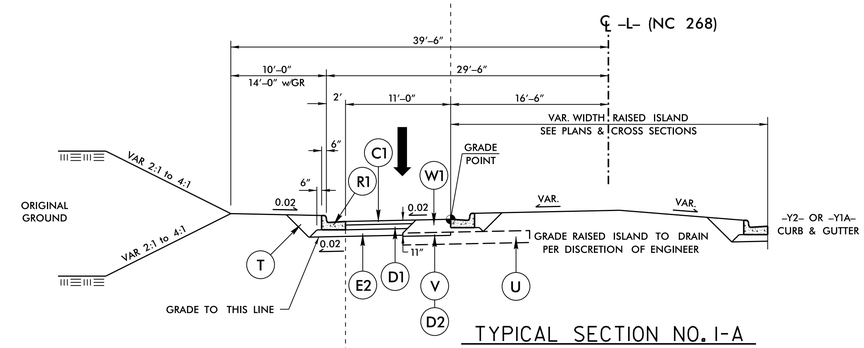

TYPICAL SECTION NO. 1-A

USE TYPICAL SECTION NO. 1-A IN CONJUNCTION WITH TYPICAL SECTION 1:

FROM -L- STA. 15+02.33 TO 19+08.05

NOTE: TIE -L- PAVEMENT TO -Y2- OR -Y1A- LEFT SIDE EDGE OF PAVEMENT OUTSIDE OF RAISED ISLAND LIMITS.

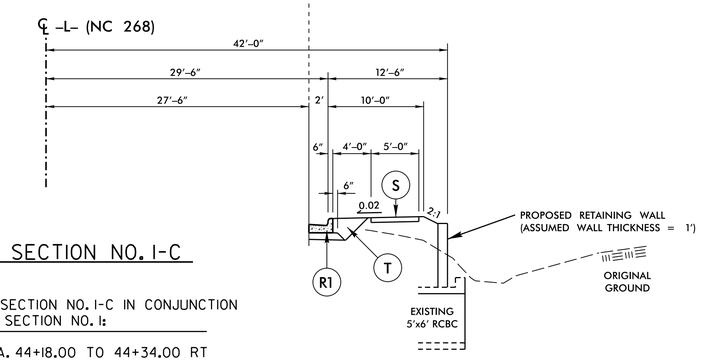

TYPICAL SECTION NO. 1-C

USE TYPICAL SECTION NO. 1-C IN CONJUNCTION WITH TYPICAL SECTION NO. 1:

FROM -L- STA. 44+18.00 TO 44+34.00 RT

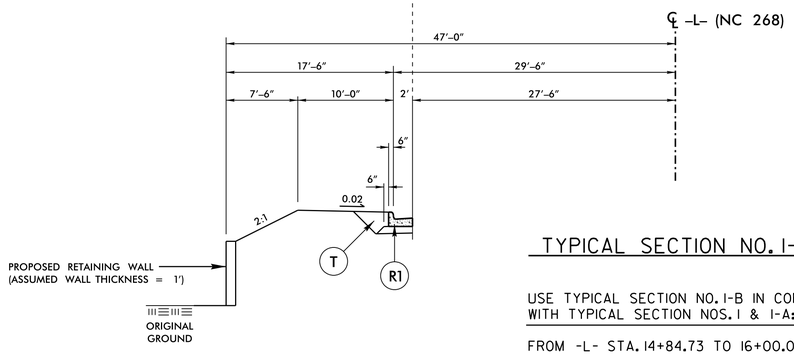

TYPICAL SECTION NO. 1-B

USE TYPICAL SECTION NO. 1-B IN CONJUNCTION WITH TYPICAL SECTION NOS. 1 & 1-A:

FROM -L- STA. 14+84.73 TO 16+00.00 LT

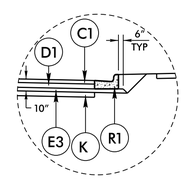

NOTE: ONLY MILL AND REPLACE EXISTING PAVEMENT WITH 2.5" OF 119.0C IN LOCATIONS TO BE USED FOR PROPOSED PAVEMENT.

PAVEMENT SCHEDULE (FINAL PAVEMENT DESIGN)	
C1	3" S9.5C
C2	VAR. S9.5C
C3	3" S9.5B
C4	VAR. S9.5B
D1	4" I19.0C
D2	2.5" I19.0C
D3	VAR. I19.0C
D4	4" I19.0B
D5	VAR. I19.0B
E1	5" B25.0C
E2	4" B25.0C
E3	3" B25.0C
E4	VAR. B25.0C
E5	4" B25.0B
E6	VAR. B25.0B
J1	8" ABC
K	LIME OR CEMENT SUBGRADE STABILIZ.
L	STABILIZER AGGREGATE
N	GEOTEXTILE FOR PAVEMENT STABILIZ.
P	.35 PRIME COAT
R1	2'-6" C & G
R2	1'-6" C & G
R3	2'-9" C & G
R4	5" MONO. CONC. ISLAND (KEYED IN)
S	4" SIDEWALK
T	EARTH MATERIAL
U	EXIST. PAVEMENT
V	MILLING, 2.5"
W1	WEDGING
W2	WEDGING
W3	WEDGING
PAVEMENT EDGE SLOPES 1:1 UNLESS NOTED OTHERWISE	

7/2/2015
r:\roadway\proj\R2603_Rdy_typ.dgn
11:29:31 AM

DocuSign Envelope ID: DA518730-DB21-4CE9-928C-9D938A62EA59

5/14/99

PROJECT REFERENCE NO.	SHEET NO.
R-2603	2A-3

ROADWAY DESIGN ENGINEER
NORTH CAROLINA PROFESSIONAL SEAL 19724 ENGINEER DAVID BURKE EVANS
8/10/2015

PAVEMENT DESIGN ENGINEER
NORTH CAROLINA PROFESSIONAL SEAL 031484 ENGINEER VINCENT G. MITCHELL
8/3/2015

M A Engineering Consultants, Inc.
NC License: F-0160
598 East Chatham Street Suite 137 Cary, NC 27511
Phone: 919.297.0220 Fax: 919.297.0221

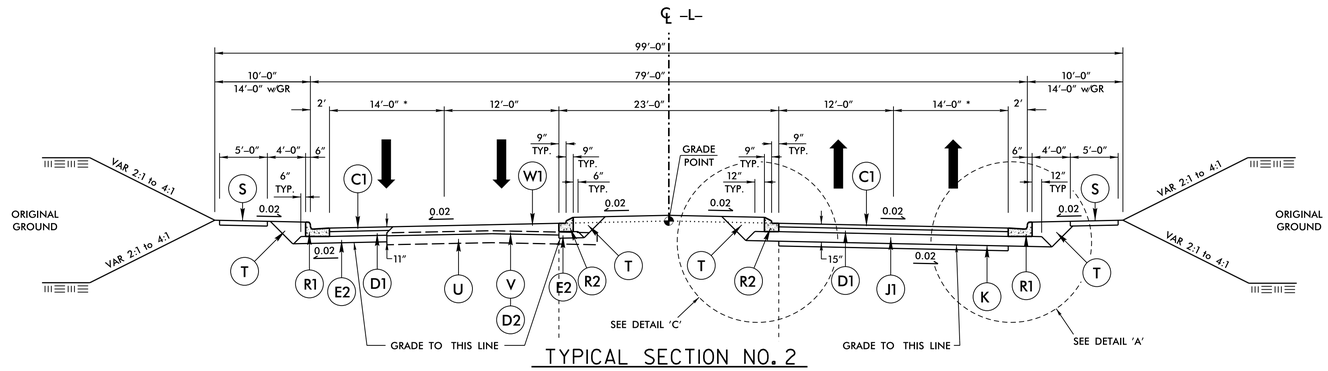

TYPICAL SECTION NO. 2

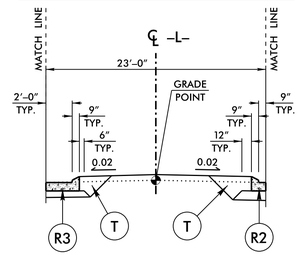

TYPICAL SECTION NO. 2-A

USE TYPICAL SECTION NO. 2:

FROM -L- STA. 57+00.00 TO 80+00.00
FROM -L- STA. 86+25.00 TO 105+99.33

USE TYPICAL SECTION NO. 2 WITH FULL WIDTH NEW PAVEMENT ON BOTH SIDES OF THE TYPICAL SECTION IN LIEU OF WEDGING & WIDENING:

FROM -L- STA. 80+00.00 TO 86+25.00

NOTE: USE 11" ALL ASPHALT PAVEMENT DESIGN FOR NARROW WIDENING AREAS LESS THAN 6' IN WIDTH.

NOTE: EXISTING PAVEMENT LOCATION VARIES WITHIN THE TYPICAL SECTION FROM THE LEFT TO RIGHT SIDE OF THE PROPOSED TYPICAL SECTION, SEE PLANS FOR LOCATIONS.

- 14' OUTSIDE LANES TO ACCOMMODATE BICYCLES

USE TYPICAL SECTION NO. 2-A IN CONJUNCTION WITH TYPICAL SECTION 2:

FROM -L- STA. 62+19.51 TO 69+31.54
FROM -L- STA. 72+75.00 TO 82+85.16

SEE PLANS FOR 1'-6" C&G TO 2'-9" C&G TRANSITION STATIONS.
SEE SHEET 2C-3 FOR TRANSITION DETAIL.

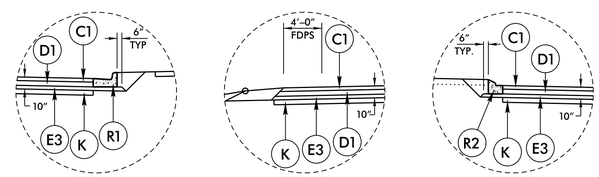

DETAIL 'A' ALTERNATE PAVEMENT DESIGN
DETAIL 'B' ALTERNATE PAVEMENT DESIGN
DETAIL 'C' ALTERNATE PAVEMENT DESIGN

NOTE: ONLY MILL AND REPLACE EXISTING PAVEMENT WITH 2.5" OF 119.0C IN LOCATIONS TO BE USED FOR PROPOSED PAVEMENT.

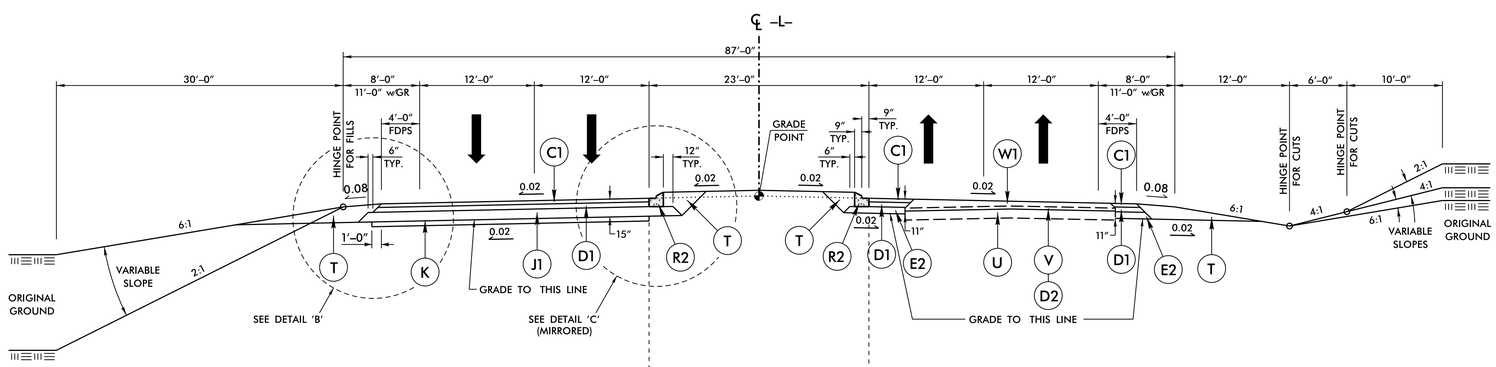

TYPICAL SECTION NO. 3

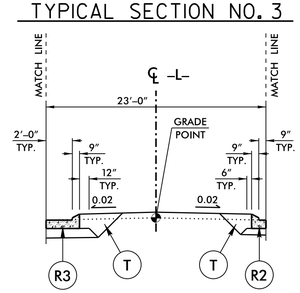

TYPICAL SECTION NO. 3-A

USE TYPICAL SECTION NO. 3:

FROM -L- STA. 105+99.33 TO 113+00.00
FROM -L- STA. 128+75.00 TO 188+95.46

USE TYPICAL SECTION NO. 3 WITH FULL WIDTH NEW PAVEMENT ON BOTH SIDES OF THE TYPICAL SECTION IN LIEU OF WEDGING & WIDENING:

FROM -L- STA. 113+00.00 TO 116+60.00 (BEGIN BRIDGE)
FROM -L- STA. 118+10.00 (END BRIDGE) TO 128+75.00

NOTE: USE 11" ALL ASPHALT PAVEMENT DESIGN FOR NARROW WIDENING AREAS LESS THAN 6' IN WIDTH.

NOTE: EXISTING PAVEMENT LOCATION VARIES WITHIN THE TYPICAL SECTION FROM THE LEFT TO RIGHT SIDE OF THE PROPOSED TYPICAL SECTION, SEE PLANS FOR LOCATIONS.

USE TYPICAL SECTION NO. 3-A IN CONJUNCTION WITH TYPICAL SECTION 3:

FROM -L- STA. 128+30.77 TO 141+43.69 (MIRROR TYPICAL, 2'-9" C&G ON RIGHT SIDE OF MEDIAN)
FROM -L- STA. 177+24.93 TO 181+87.84
FROM -L- STA. 184+00.57 TO 188+95.46

SEE PLANS FOR 1'-6" C&G TO 2'-9" C&G TRANSITION STATIONS.
SEE SHEET 2C-3 FOR TRANSITION DETAIL.

PAVEMENT SCHEDULE (FINAL PAVEMENT DESIGN)	
C1	3" S9.5C
C2	VAR. S9.5C
C3	3" S9.5B
C4	VAR. S9.5B
D1	4" I19.0C
D2	2.5" I19.0C
D3	VAR. I19.0C
D4	4" I19.0B
D5	VAR. I19.0B
E1	5" B25.0C
E2	4" B25.0C
E3	3" B25.0C
E4	VAR. B25.0C
E5	4" B25.0B
E6	VAR. B25.0B
J1	8" ABC
K	LIME OR CEMENT SUBGRADE STABILIZ.
L	STABILIZER AGGREGATE
N	GEOTEXTILE FOR PAVEMENT STABILIZ.
P	.35 PRIME COAT
R1	2'-6" C & G
R2	1'-6" C & G
R3	2'-9" C & G
R4	5" MONO. CONC. ISLAND (KEYED IN)
S	4" SIDEWALK
T	EARTH MATERIAL
U	EXIST. PAVEMENT
V	MILLING, 2.5"
W1	WEDGING
W2	WEDGING
W3	WEDGING
PAVEMENT EDGE SLOPES 1:1 UNLESS NOTED OTHERWISE	

7/2/2015
r:\roadway\proj\R2603_Rdy_typ.dgn

DocuSign Envelope ID: DA518730-DB21-4CE9-928C-9D938A62EA59

5/14/99

PROJECT REFERENCE NO.	SHEET NO.
R-2603	2A-4

ROADWAY DESIGN ENGINEER
NORTH CAROLINA PROFESSIONAL SEAL 19724 ENGINEER DAVID BURKE EVANS
8/10/2015

PAVEMENT DESIGN ENGINEER
NORTH CAROLINA PROFESSIONAL SEAL 031484 ENGINEER VANESSA GRIMMITCHER
8/3/2015

M A Engineering Consultants, Inc. NC License: F-0160
598 East Chatham Street Suite 137 Cary, NC 27511
Phone: 919.297.0220 Fax: 919.297.0221

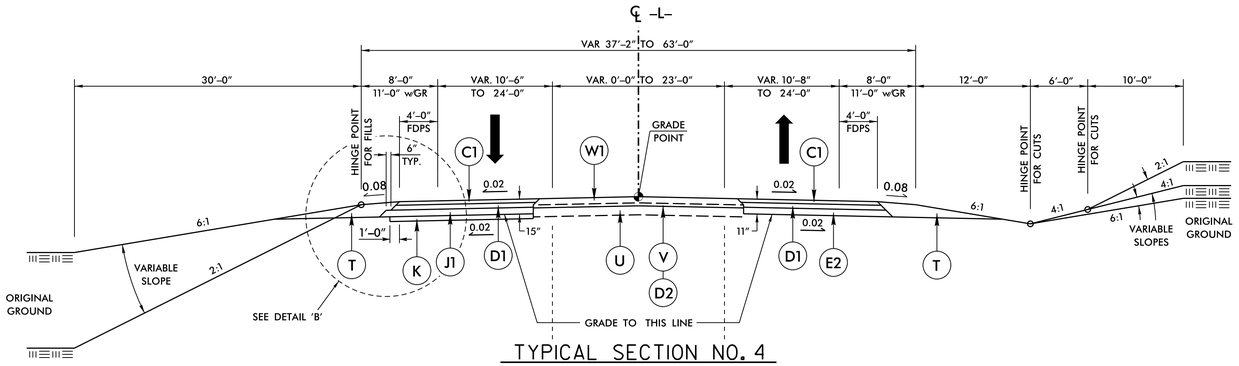

TYPICAL SECTION NO. 4

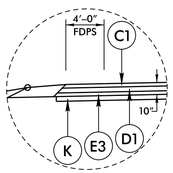

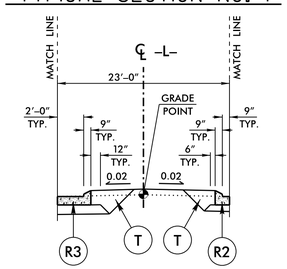

TYPICAL SECTION NO. 4-A

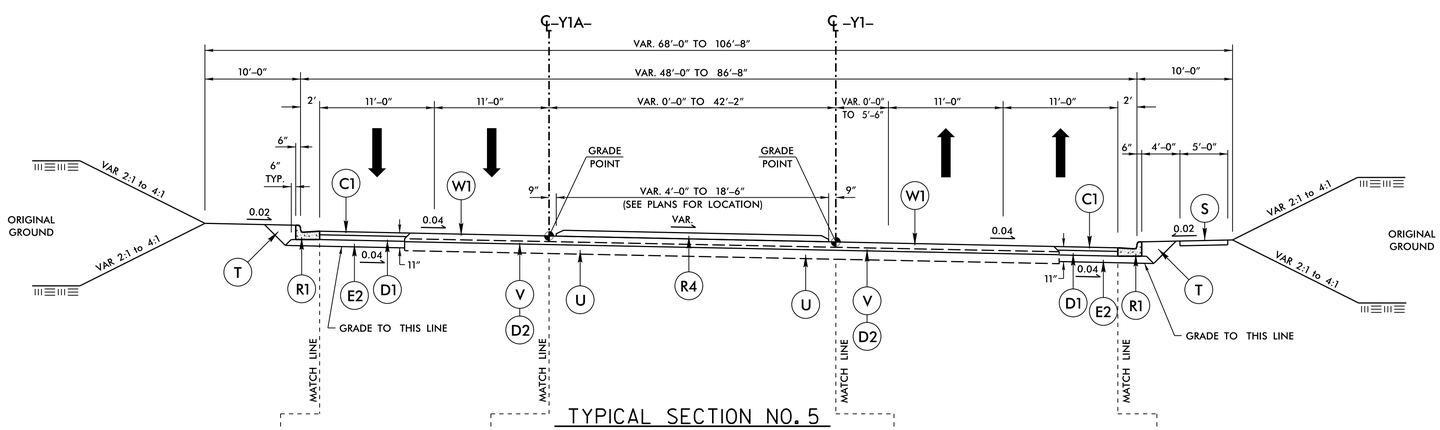

TYPICAL SECTION NO. 5

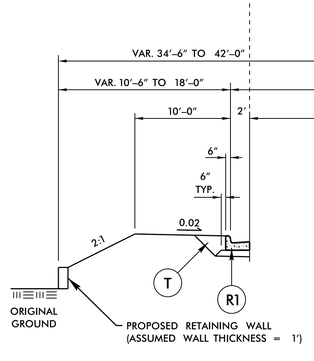

TYPICAL SECTION NO. 5-B

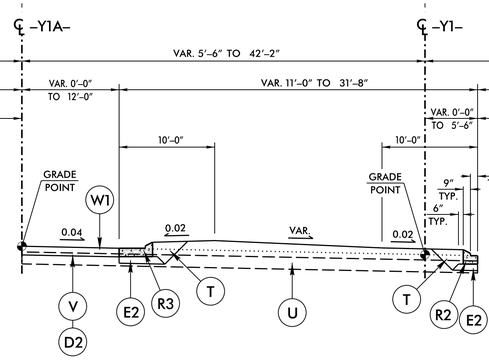

TYPICAL SECTION NO. 5-A

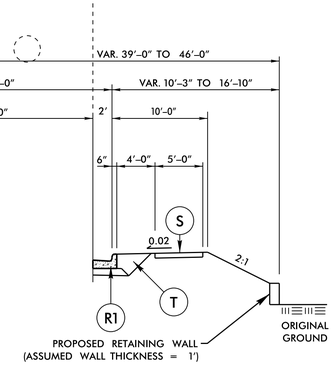

TYPICAL SECTION NO. 5-C

USE TYPICAL SECTION NO. 4:

FROM -L- STA. 188+95.46 TO 195+00.00

NOTE: USE 11" ALL ASPHALT PAVEMENT DESIGN FOR NARROW WIDENING AREAS LESS THAN 6' IN WIDTH.

NOTE:
MILL TOP 1.5" LAYER OF EXISTING PAVEMENT TO ENSURE SMOOTH TIE-IN:

FROM -L- STA. 192+50.00 TO 195+00.00

USE TYPICAL SECTION NO. 4-A IN CONJUNCTION WITH TYPICAL SECTION 4:

FROM -L- STA. 188+95.46 TO 189+30.10

NOTE: ONLY MILL AND REPLACE EXISTING PAVEMENT WITH 2.5" OF 119.0C IN LOCATIONS TO BE USED FOR PROPOSED PAVEMENT.

USE TYPICAL SECTION NO. 5:

FROM -Y1- STA. 15+00.00 TO 32+32.91
FROM -Y1A- STA. 21+58.06 TO 32+53.11

NOTE:

MILL EXISTING PAVEMENT TO A DEPTH OF 1.5" AND REPLACE WITH 1.5" OF S9.5C FROM:
-Y1- STA. 13+05.00 TO 15+00.00 (SEE SHEET 18)

REMOVE AND REPLACE EXISTING DAMAGED 2'-6" CURB AND GUTTER AT EXISTING LOCATION WHILE TAKING MILLING & RESURFACING INTO ACCOUNT FROM:
-Y1- STA. 13+25.00 TO 15+00.00 RT

USE TYPICAL SECTION NO. 5-A IN CONJUNCTION WITH TYPICAL SECTION NO. 5:

FROM -Y1- STA. 24+72.87 TO 29+73.77
FROM -Y1A- STA. 24+76.72 TO 29+93.97

USE TYPICAL SECTION NO. 5-B IN CONJUNCTION WITH TYPICAL SECTION NO. 5:

FROM -Y1A- STA. 28+76.00 TO 29+10.00 LT

USE TYPICAL SECTION NO. 5-C IN CONJUNCTION WITH TYPICAL SECTION NO. 5:

FROM -Y1- STA. 29+00.00 TO 29+42.00 RT

NOTE:
WHEN THE OFFSET TO THE RETAINING WALLS IS AT THE MINIMUM, TYPICAL SECTION NOS. 5-B & 5-C WILL LOOK SIMILAR TO TYPICAL SECTION NO. 1-C EXCEPT THE TOP OF WALL WILL BE LOCATED NEAR THE BERM POINT, THERE WILL BE NO 2:1 SIDE SLOPE, AND THE EXISTING STUCTURE IS A 4'x6' RCBC.

PAVEMENT SCHEDULE (FINAL PAVEMENT DESIGN)	
C1	3" S9.5C
C2	VAR. S9.5C
C3	3" S9.5B
C4	VAR. S9.5B
D1	4" I19.0C
D2	2.5" I19.0C
D3	VAR. I19.0C
D4	4" I19.0B
D5	VAR. I19.0B
E1	5" B25.0C
E2	4" B25.0C
E3	3" B25.0C
E4	VAR. B25.0C
E5	4" B25.0B
E6	VAR. B25.0B
J1	8" ABC
K	LIME OR CEMENT SUBGRADE STABILIZ.
L	STABILIZER AGGREGATE
N	GEOTEXTILE FOR PAVEMENT STABILIZ.
P	.35 PRIME COAT
R1	2'-6" C & G
R2	1'-6" C & G
R3	2'-9" C & G
R4	5" MONO. CONC. ISLAND (KEYED IN)
S	4" SIDEWALK
T	EARTH MATERIAL
U	EXIST. PAVEMENT
V	MILLING, 2.5"
W1	WEDGING
W2	WEDGING
W3	WEDGING
PAVEMENT EDGE SLOPES 1:1 UNLESS NOTED OTHERWISE	

7/2/2015
r:\roadway\proj\R2603_Rdy_typ.dgn

DocuSign Envelope ID: DA518730-DB21-4CE9-928C-9D938A62EA59

5/14/99

PROJECT REFERENCE NO.	SHEET NO.
R-2603	2A-5

ROADWAY DESIGN ENGINEER
NORTH CAROLINA PROFESSIONAL SEAL 19724 ENGINEER DAVID BURKE EVANS
DocuSigned by: David Burke Evans
DC4A9226B8F4400...
8/10/2015

PAVEMENT DESIGN ENGINEER
NORTH CAROLINA PROFESSIONAL SEAL 031484 ENGINEER VANESSA G. MITCHELL
DocuSigned by: Vanessa G. Mitchell
3C3BE5E4B3E4AB...
8/3/2015

M A Engineering Consultants, Inc.
NC License: F-0160
598 East Chatham Street Suite 137 Cary, NC 27511
Phone: 919.297.0220 Fax: 919.297.0221

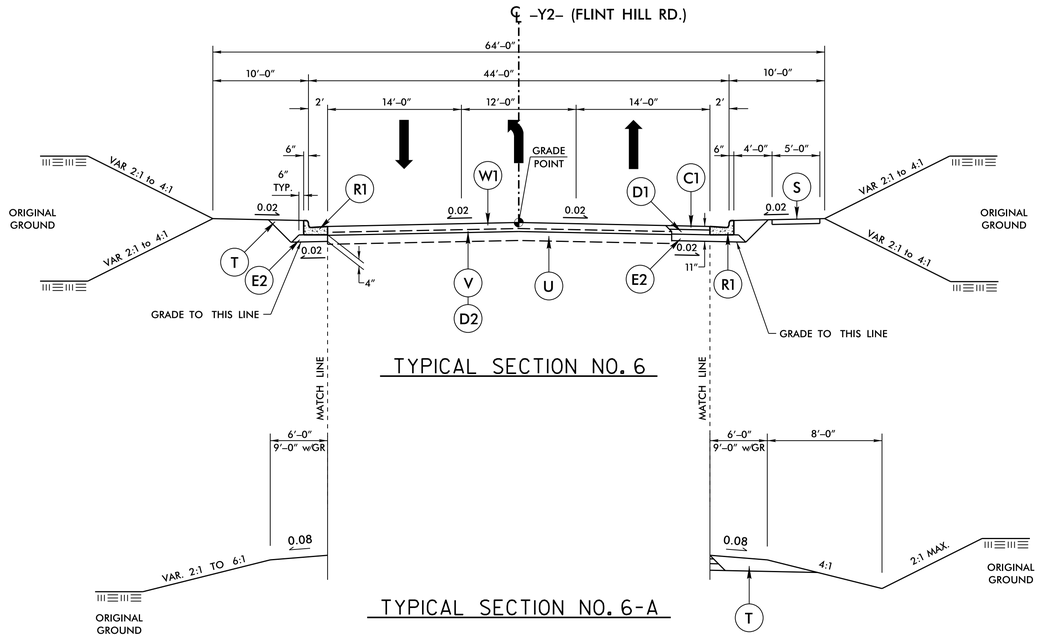

TYPICAL SECTION NO. 6

TYPICAL SECTION NO. 6-A

USE TYPICAL SECTION NO. 6:

FROM -Y2- STA. 17+93.62 TO 18+54.72

USE TYPICAL SECTION NO. 6-A IN CONJUNCTION WITH TYPICAL SECTION NO. 6:

FROM -Y2- STA. 18+54.72 TO 19+30.00

NOTE: DO NOT MILL EXISTING PAVEMENT AND REPLACE WITH 2.5" I19.0C IN THIS LOCATION.

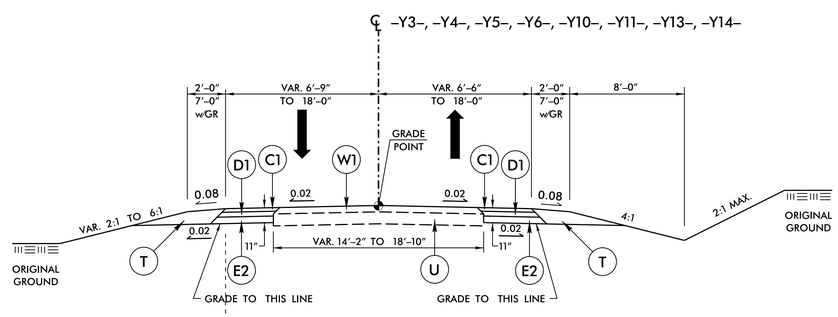

TYPICAL SECTION NO. 7

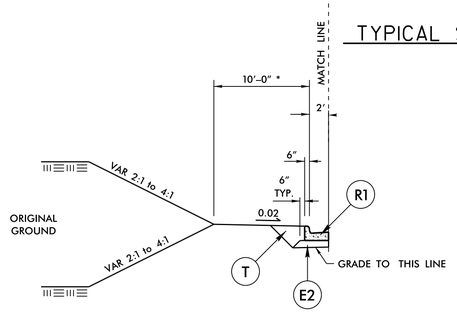

TYPICAL SECTION NO. 7-A

USE TYPICAL SECTION NO. 7:

FROM -Y3- STA. 10+06.00 TO 10+72.48
FROM -Y5- STA. 10+00.00 TO 10+72.46
FROM -Y11- STA. 12+48.35 TO 13+59.19

USE TYPICAL SECTION NO. 7 WITH FULL WIDTH NEW PAVEMENT IN LIEU OF WEDGING & WIDENING:

FROM -Y4- STA. 10+00.00 TO 10+72.50
FROM -Y6- STA. 10+50.00 TO 11+72.20
FROM -Y10- STA. 11+56.49 TO 12+62.49
FROM -Y13- STA. 10+72.51 TO 11+15.22
FROM -Y14- STA. 10+59.64 TO 10+92.86

USE TYPICAL SECTION NO. 7-A IN CONJUNCTION WITH TYPICAL SECTION 7:

FROM -Y5- STA. 10+00.00 TO 10+72.46
FROM -Y6- STA. 10+50.00 TO 11+72.20

• VARIES 2'-0" TO 10'-0" FOR -Y6-

PAVEMENT SCHEDULE
(FINAL PAVEMENT DESIGN)

C1	3" S9.5C
C2	VAR. S9.5C
C3	3" S9.5B
C4	VAR. S9.5B
D1	4" I19.0C
D2	2.5" I19.0C
D3	VAR. I19.0C
D4	4" I19.0B
D5	VAR. I19.0B
E1	5" B25.0C
E2	4" B25.0C
E3	3" B25.0C
E4	VAR. B25.0C
E5	4" B25.0B
E6	VAR. B25.0B
J1	8" ABC
K	LIME OR CEMENT SUBGRADE STABILIZ.
L	STABILIZER AGGREGATE
N	GEOTEXTILE FOR PAVEMENT STABILIZ.
P	.35 PRIME COAT
R1	2'-6" C & G
R2	1'-6" C & G
R3	2'-9" C & G
R4	5" MONO. CONC. ISLAND (KEYED IN)
S	4" SIDEWALK
T	EARTH MATERIAL
U	EXIST. PAVEMENT
V	MILLING, 2.5"
W1	WEDGING
W2	WEDGING
W3	WEDGING

PAVEMENT EDGE SLOPES 1:1 UNLESS NOTED OTHERWISE

7/2/2015
r:\roadway\proj\R2603_Rdy_typ.dgn
USER: gmcintyre

DocuSign Envelope ID: DA518730-DB21-4CE9-928C-9D938A62EA59

5/14/99

PROJECT REFERENCE NO.	SHEET NO.
R-2603	2A-6

ROADWAY DESIGN ENGINEER
NORTH CAROLINA PROFESSIONAL SEAL 19724 ENGINEER DAVID BURKE EVANS
DocuSigned by: 8CAA22C6BF4E4...
8/10/2015

PAVEMENT DESIGN ENGINEER
NORTH CAROLINA PROFESSIONAL SEAL 031484 ENGINEER MARK W. SWITCHENKO
DocuSigned by: A0CBEF463E4B4...
8/3/2015

M A Engineering Consultants, Inc.
NC License: F-0160
598 East Chatham Street Suite 137 Cary, NC 27511
Phone: 919.297.0220 Fax: 919.297.0221

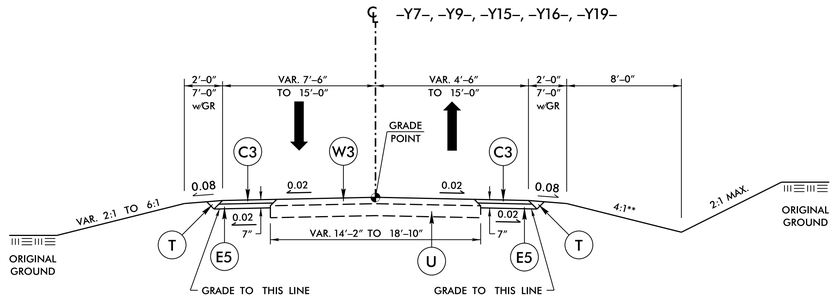

TYPICAL SECTION NO.8

USE TYPICAL SECTION NO. 8:

FROM -Y7- STA. 11+00.00 TO 12+00.14
FROM -Y16- STA. 10+65.00 TO 11+05.00
FROM -Y19- STA. 12+50.00 TO 13+00.00

USE TYPICAL SECTION NO. 8 WITH FULL WIDTH NEW PAVEMENT IN LIEU OF WEDGING & WIDENING:

FROM -Y7- STA. 12+00.14 TO 13+64.35
FROM -Y9- STA. 10+76.99 TO 13+25.00
FROM -Y15- STA. 10+10.00 TO 11+61.61
FROM -Y16- STA. 11+05.00 TO 14+01.75
FROM -Y19- STA. 10+15.30 TO 12+50.00

** USE 6:1 DITCH SLOPE AND ROADWAY CUT DITCH TYPICAL FROM:
-Y16- STA. 10+50.00 TO 10+65.00 RT

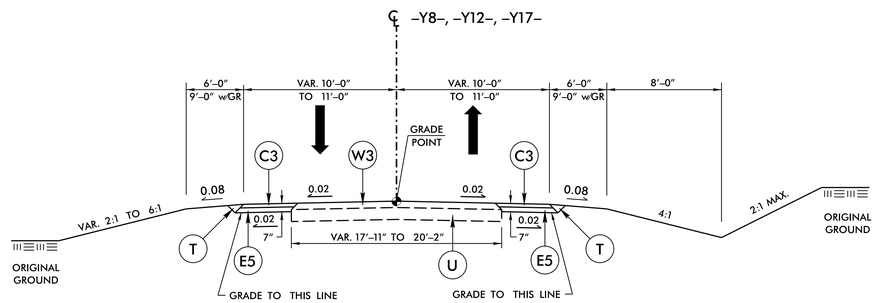

TYPICAL SECTION NO.9

USE TYPICAL SECTION NO. 9:

FROM -Y8- STA. 13+00.00 TO 14+36.89
FROM -Y12- STA. 14+27.24 TO 16+25.02
FROM -Y17- STA. 11+15.00 TO 14+15.00

USE TYPICAL SECTION NO. 9 WITH FULL WIDTH NEW PAVEMENT IN LIEU OF WEDGING & WIDENING:

FROM -Y12- STA. 11+18.19 TO 14+27.24
FROM -Y17- STA. 14+15.00 TO 17+89.73

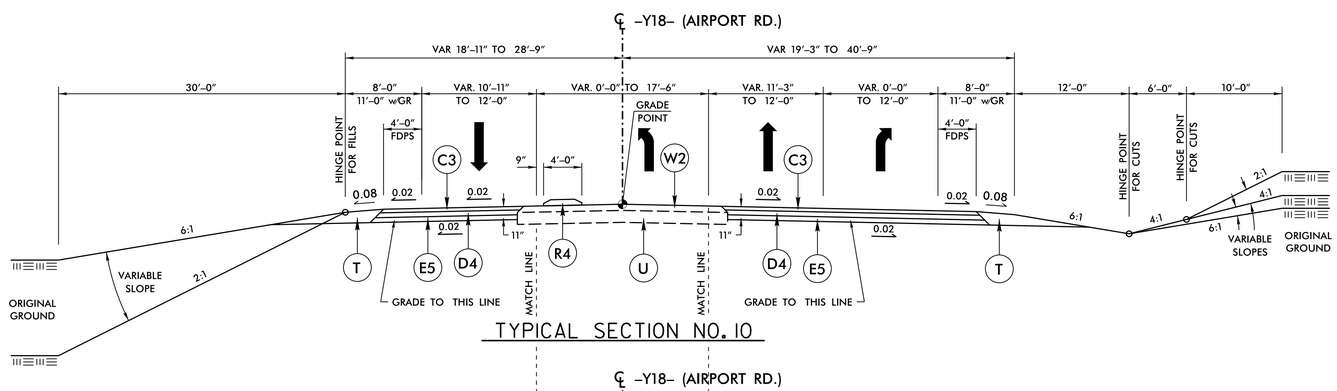

TYPICAL SECTION NO. 10

USE TYPICAL SECTION NO. 10:

FROM -Y18- STA. 17+50.00 TO 30+21.37

NOTE:
MILL TOP 1.5" LAYER OF EXISTING PAVEMENT TO ENSURE SMOOTH TIE-IN:
FROM -Y18- STA. 17+50.00 TO 17+65.00

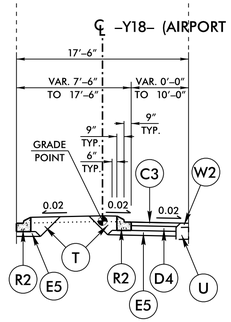

TYPICAL SECTION NO. 10-A

USE TYPICAL SECTION NO. 10-A IN CONJUNCTION WITH TYPICAL SECTION 10:

FROM -Y18- STA. 23+16.25 TO 27+31.67

PAVEMENT SCHEDULE
(FINAL PAVEMENT DESIGN)

C1	3" S9.5C
C2	VAR. S9.5C
C3	3" S9.5B
C4	VAR. S9.5B
D1	4" I19.0C
D2	2.5" I19.0C
D3	VAR. I19.0C
D4	4" I19.0B
D5	VAR. I19.0B
E1	5" B25.0C
E2	4" B25.0C
E3	3" B25.0C
E4	VAR. B25.0C
E5	4" B25.0B
E6	VAR. B25.0B
J1	8" ABC
K	LIME OR CEMENT SUBGRADE STABILIZ.
L	STABILIZER AGGREGATE
N	GEOTEXTILE FOR PAVEMENT STABILIZ.
P	.35 PRIME COAT
R1	2'-6" C & G
R2	1'-6" C & G
R3	2'-9" C & G
R4	5" MONO. CONC. ISLAND (KEYED IN)
S	4" SIDEWALK
T	EARTH MATERIAL
U	EXIST. PAVEMENT
V	MILLING, 2.5"
W1	WEDGING
W2	WEDGING
W3	WEDGING

PAVEMENT EDGE SLOPES 1:1 UNLESS NOTED OTHERWISE

7/2/2015
r:\roadway\proj\R2603_Rdy_typ.dgn

DocuSign Envelope ID: DA518730-DB21-4CE9-928C-9D938A62EA59

5/14/99

PROJECT REFERENCE NO.	SHEET NO.
R-2603	2A-7

ROADWAY DESIGN ENGINEER
NORTH CAROLINA PROFESSIONAL SEAL 19724 ENGINEER DAVID BURKE EVANS
8/10/2015

PAVEMENT DESIGN ENGINEER
NORTH CAROLINA PROFESSIONAL SEAL 031484 ENGINEER VANESSA GUIDRY MITCHELL
8/3/2015

M A Engineering Consultants, Inc. NC License: F-0160
598 East Chatham Street Suite 137 Cary, NC 27511
Phone: 919.297.0220 Fax: 919.297.0221

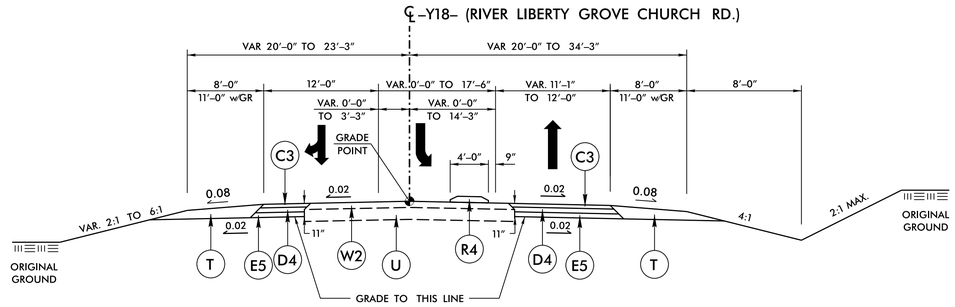

TYPICAL SECTION NO. 11

USE TYPICAL SECTION NO. 11:

FROM -Y18- STA. 37+12.86 TO 42+40.00

USE TYPICAL SECTION NO. 11 WITH FULL WIDTH NEW PAVEMENT IN LIEU OF WEDGING & WIDENING:

FROM -Y18- STA. 31+17.25 TO 37+12.86

NOTE:
MILL TOP 1.5" LAYER OF EXISTING PAVEMENT TO ENSURE SMOOTH TIE-IN:
FROM -Y18- STA. 40+75.00 TO 42+40.00

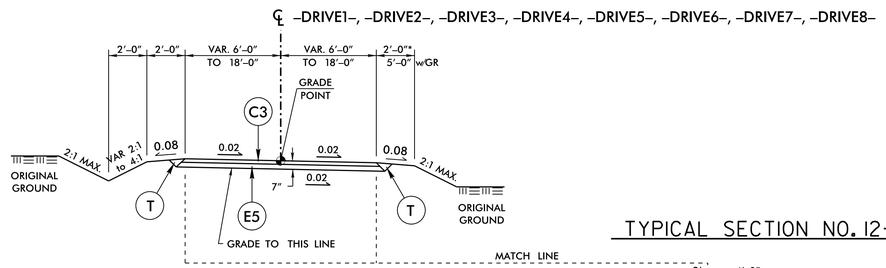

TYPICAL SECTION NO. 12

TYPICAL SECTION NO. 12-A

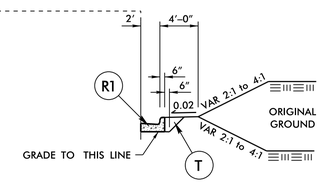

USE TYPICAL SECTION NO. 12:

FROM -DRIVE1- STA. 10+20.00 TO 11+40.45
FROM -DRIVE2- STA. 10+15.00 TO 11+43.00
FROM -DRIVE3- STA. 10+10.00 TO 13+48.52
FROM -DRIVE4- STA. 10+39.50 TO 14+00.00
FROM -DRIVE5- STA. 10+06.25 TO 10+75.00
FROM -DRIVE6- STA. 10+37.50 TO 13+33.60
FROM -DRIVE7- STA. 10+42.50 (EDGE OF CONC. DRIVE TURNOUT) TO 11+75.00
FROM -DRIVE8- STA. 10+00.00 TO 11+54.03

• NOTE: EXTEND RIGHT SIDE SHOULDER ON -DRIVE4- TO TIE TO PROPOSED -L- CUT SLOPE, SEE CROSS SECTIONS.

USE TYPICAL SECTION NO. 12-A IN CONJUNCTION WITH TYPICAL SECTION 12:

FROM -DRIVE2- STA. 10+15.00 TO 11+43.00 LT (MIRROR, AS NECESSARY)
FROM -DRIVE2- STA. 10+94.29 TO 11+43.00 RT
FROM -DRIVE6- STA. 10+37.50 TO 10+67.58 LT (MIRROR, AS NECESSARY)
FROM -DRIVE6- STA. 10+37.50 TO 10+75.37 RT

PAVEMENT SCHEDULE (FINAL PAVEMENT DESIGN)	
C1	3" S9.5C
C2	VAR. S9.5C
C3	3" S9.5B
C4	VAR. S9.5B
D1	4" I19.0C
D2	2.5" I19.0C
D3	VAR. I19.0C
D4	4" I19.0B
D5	VAR. I19.0B
E1	5" B25.0C
E2	4" B25.0C
E3	3" B25.0C
E4	VAR. B25.0C
E5	4" B25.0B
E6	VAR. B25.0B
J1	8" ABC
K	LIME OR CEMENT SUBGRADE STABILIZ.
L	STABILIZER AGGREGATE
N	GEOTEXTILE FOR PAVEMENT STABILIZ.
P	.35 PRIME COAT
R1	2'-6" C & G
R2	1'-6" C & G
R3	2'-9" C & G
R4	5" MONO. CONC. ISLAND (KEYED IN)
S	4" SIDEWALK
T	EARTH MATERIAL
U	EXIST. PAVEMENT
V	MILLING, 2.5"
W1	WEDGING
W2	WEDGING
W3	WEDGING
PAVEMENT EDGE SLOPES 1:1 UNLESS NOTED OTHERWISE	

7/2/2015
r:\roadway\proj\R2603_Rdy_typ.dgn
USER: MW

DocuSign Envelope ID: DA518730-DB21-4CE9-928C-9D938A62EA59

5/14/99

PROJECT REFERENCE NO.	SHEET NO.
R-2603	2A-8

ROADWAY DESIGN ENGINEER
NORTH CAROLINA PROFESSIONAL SEAL 19724 ENGINEER DAVID BURKE EVANS
8/10/2015

PAVEMENT DESIGN ENGINEER
NORTH CAROLINA PROFESSIONAL SEAL 031484 ENGINEER MARGARET G. MITCHELL
8/3/2015

M A Engineering Consultants, Inc.
NC License: F-0160
598 East Chatham Street Suite 137 Cary, NC 27511
Phone: 919.297.0220 Fax: 919.297.0221

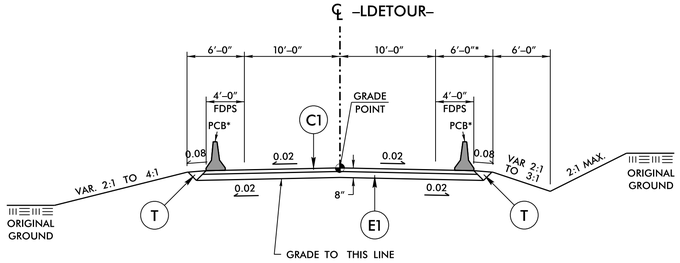

TYPICAL SECTION NO. 13

USE TYPICAL SECTION NO. 13:

FROM -LDETOUR- STA. 10+00.00 TO 18+72.92

NOTE: • PCB - PORTABLE CONCRETE BARRIER (SEE PLANS FOR LOCATIONS)

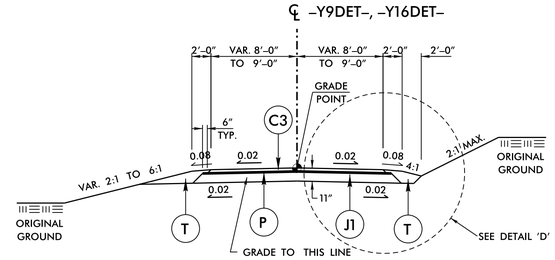

TYPICAL SECTION NO. 14

USE TYPICAL SECTION NO. 14:

FROM -Y9DET- STA. 10+10.39 TO 14+00.00
FROM -Y16DET- STA. 12+32.56 TO 17+42.30

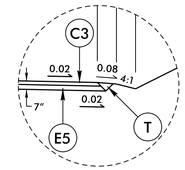

DETAIL 'D'
ALTERNATE PAVEMENT DESIGN

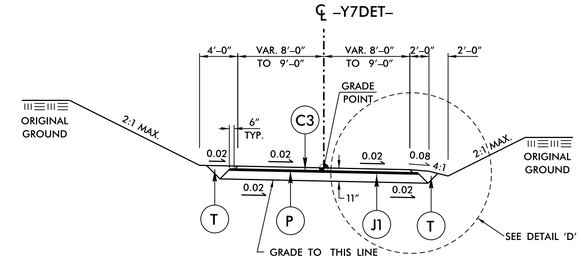

TYPICAL SECTION NO. 15

USE TYPICAL SECTION NO. 15:

FROM -Y7DET- STA. 5+71.26 TO 8+27.57

WIDEN EXISTING PAVEMENT USING EXISTING EDGE OF PAVEMENT AND EXISTING SUPERELEVATION AS CONTROL:

FROM -Y7DET- STA. 5+40.00 TO 5+65.92 LT

WIDEN EXISTING PAVEMENT USING PROFILE, GRADE POINT, AND EXISTING SUPERELEVATION AS CONTROL:

FROM -Y7DET- STA. 5+65.92 TO 5+71.26 RT & LT

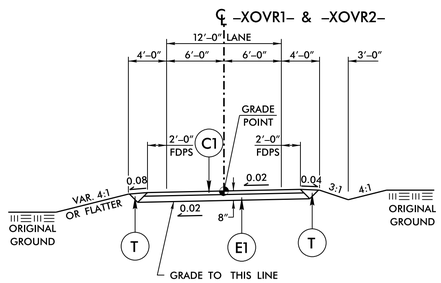

TYPICAL SECTION NO. 16

USE TYPICAL SECTION NO. 16:

FROM -XOVR1- STA. 14+21.88 TO 16+94.39
FROM -XOVR2- STA. 13+11.64 TO 15+51.43

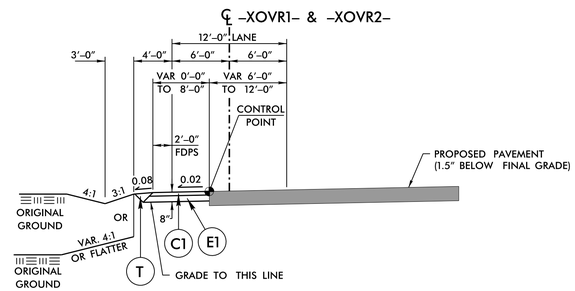

TYPICAL SECTION NO. 17

USE TYPICAL SECTION NO. 17:

WIDEN USING PROPOSED -L- (RT) MEDIAN EDGE OF PAVEMENT AND -XOVR1- OR -XOVR2- SUPERELEVATION AS CONTROL:

FROM -XOVR1- STA. 11+97.97 TO 14+21.88
FROM -XOVR2- STA. 15+51.43 TO 16+34.43

WIDEN USING PROPOSED -L- (LT) MEDIAN EDGE OF PAVEMENT AND -XOVR1- OR -XOVR2- SUPERELEVATION AS CONTROL:

FROM -XOVR1- STA. 16+94.39 TO 17+88.43 (MIRROR TYPICAL; PROP. PVMT. ON LEFT, WIDEN ON RIGHT)
FROM -XOVR2- STA. 10+43.29 TO 13+11.64 (MIRROR TYPICAL; PROP. PVMT. ON LEFT, WIDEN ON RIGHT)

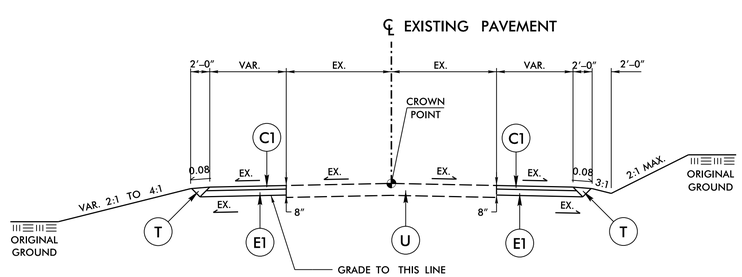

TYPICAL SECTION NO. 18

USE TYPICAL SECTION NO. 18:

AT TEMPORARY WIDENING LOCATIONS AS SHOWN IN THE WORK ZONE TRAFFIC CONTROL PLANS.

DIMENSIONS SHOWN ARE MINIMUMS AND SUBJECT TO CHANGE AS DIRECTED BY THE ENGINEER TO SUIT FIELD CONDITIONS.

WIDENING IS SHOWN ON BOTH SIDES OF THE TYPICAL TO REFLECT THE CUT AND FILL SECTIONS, HOWEVER, ACTUAL TEMPORARY WIDENING WILL TYPICALLY OCCUR ONLY ON ONE SIDE OF THE EXISTING PAVEMENT.

PAVEMENT SCHEDULE (FINAL PAVEMENT DESIGN)	
C1	3" S9.5C
C2	VAR. S9.5C
C3	3" S9.5B
C4	VAR. S9.5B
D1	4" I19.0C
D2	2.5" I19.0C
D3	VAR. I19.0C
D4	4" I19.0B
D5	VAR. I19.0B
E1	5" B25.0C
E2	4" B25.0C
E3	3" B25.0C
E4	VAR. B25.0C
E5	4" B25.0B
E6	VAR. B25.0B
J1	8" ABC
K	LIME OR CEMENT SUBGRADE STABILIZ.
L	STABILIZER AGGREGATE
N	GEOTEXTILE FOR PAVEMENT STABILIZ.
P	.35 PRIME COAT
R1	2'-6" C & G
R2	1'-6" C & G
R3	2'-9" C & G
R4	5" MONO. CONC. ISLAND (KEYED IN)
S	4" SIDEWALK
T	EARTH MATERIAL
U	EXIST. PAVEMENT
V	MILLING, 2.5"
W1	WEDGING
W2	WEDGING
W3	WEDGING
PAVEMENT EDGE SLOPES 1:1 UNLESS NOTED OTHERWISE	

7/22/2015
r:\roadway\proj\R2603_Rdy_typ.dgn
mcmahon

DocuSign Envelope ID: DA518730-DB21-4CE9-928C-9D938A62EA59

-LDETOUR- & -Y7DET-

PROJECT REFERENCE NO.	SHEET NO.
R-2603	2B-1
R/W SHEET NO.	

ROADWAY DESIGN ENGINEER — NORTH CAROLINA PROFESSIONAL SEAL 19724 — ENGINEER — DARYL D. BURKE, P.E. — RCAAA0328001 — 8/10/2015

HYDRAULICS ENGINEER — NORTH CAROLINA PROFESSIONAL SEAL 21656 — ENGINEER — KONG Y. THAO, P.E. — DBC48F0557 — 8/10/2015

M A Engineering Consultants, Inc. NC License: F-0160
598 East Chatham Street Suite 137 Cary, NC 27511
Phone: 919.297.0220 Fax: 919.297.0221

NAD 83/95

REVISIONS

8/17/99

-Y7DET-

PI Sta 5+91.11	PI Sta 8+00.05
Δ = 89° 17' 49.8" (LT)	Δ = 85° 18' 49.3" (RT)
D = 143° 14' 22.0"	D = 190° 59' 09.4"
L = 62.34'	L = 44.67'
T = 39.51'	T = 27.64'
R = 40.00'	R = 30.00'
SE = SEE PLANS	SE = SEE PLANS
V = 10 MPH	V = STOP.COND.

DETAIL TDS1
SPECIAL CUT DITCH
(Not to Scale)

Natural Ground, 2:1, D, d, 4:1 or Flatter, Front Ditch Slope, Geotextile
Type of Liner= Class B Rip-Rap
Min. D=1 Ft.
Max. d=0.5 Ft.

-Y7DET- FROM STA. 6+50 TO STA. 7+75 RT

DETAIL TSD2
SPECIAL CUT DITCH
(Not to Scale)

Natural Ground, 2:1, D, 4:1 or Flatter, Front Ditch Slope
Min. D=1Ft.

FROM -L- STA. 56+83 TO STA. 59+21 LT

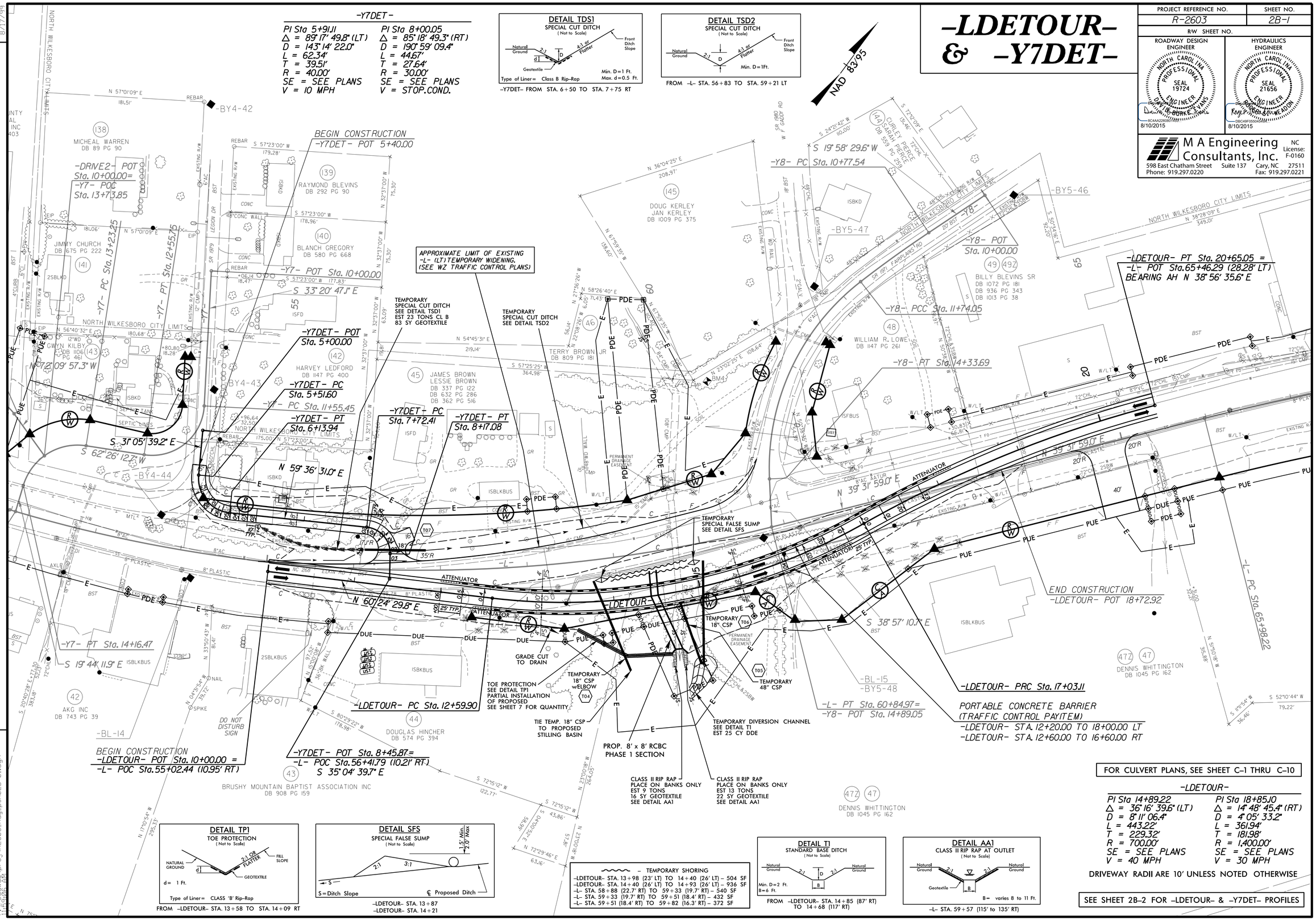

FOR CULVERT PLANS, SEE SHEET C-1 THRU C-10

-LDETOUR-

PI Sta 14+89.22	PI Sta 18+85.10
Δ = 36° 16' 39.6" (LT)	Δ = 14° 48' 45.4" (RT)
D = 8° 11' 06.4"	D = 4° 05' 33.2"
L = 443.22'	L = 361.94'
T = 229.32'	T = 181.98'
R = 700.00'	R = 1,400.00'
SE = SEE PLANS	SE = SEE PLANS
V = 40 MPH	V = 30 MPH

DRIVEWAY RADII ARE 10' UNLESS NOTED OTHERWISE

SEE SHEET 2B-2 FOR -LDETOUR- & -Y7DET- PROFILES

DETAIL TP1
TOE PROTECTION
(Not to Scale)

NATURAL GROUND, 2:1 OR FLATTER, FILL SLOPE, d, GEOTEXTILE
d= 1 Ft.
Type of Liner= CLASS 'B' Rip-Rap

FROM -LDETOUR- STA. 13+58 TO STA. 14+09 RT

DETAIL SFS
SPECIAL FALSE SUMP
(Not to Scale)

2:1, 3:1, 1.5' Min., 2.0' Max.
S=Ditch Slope
℄ Proposed Ditch

-LDETOUR- STA. 13+87
-LDETOUR- STA. 14+21

~ – TEMPORARY SHORING

-LDETOUR- STA. 13+98 (23' LT) TO 14+40 (26' LT)	– 504 SF
-LDETOUR- STA. 14+40 (26' LT) TO 14+93 (26' LT)	– 936 SF
-L- STA. 58+88 (22.7' RT) TO 59+33 (19.7' RT)	– 540 SF
-L- STA. 59+33 (19.7' RT) TO 59+51 (18.4' RT)	– 432 SF
-L- STA. 59+51 (18.4' RT) TO 59+82 (16.3' RT)	– 372 SF

DETAIL T1
STANDARD BASE DITCH
(Not to Scale)

Natural Ground, 2:1, D, 2:1, Natural Ground, B
Min. D=2 Ft.
B=6 Ft.

FROM -LDETOUR- STA. 14+85 (87' RT) TO 14+68 (117' RT)

DETAIL AA1
CLASS II RIP RAP AT OUTLET
(Not to Scale)

Natural Ground, 2:1, 2:1, Natural Ground, Geotextile, B
B= varies 8 to 11 Ft.

-L- STA. 59+57 (115' to 135' RT)

7/2/2015
11:15:06 AM
\\Mae\Data\proj\R2603_Rdy_psh02B-01.dgn

DocuSign Envelope ID: DA518730-DB21-4CE9-928C-9D938A62EA59

5/28/99

EXISTING GROUND	
PROPOSED GRADE	
LEFT DITCH GRADE	
RIGHT DITCH GRADE	

PROJECT REFERENCE NO.	SHEET NO.
R-2603	2B-2

ROADWAY DESIGN ENGINEER
NORTH CAROLINA PROFESSIONAL SEAL 19724 ENGINEER
DOUGLAS BURKE EVANS
BC4AA22D8D8C14A...
8/10/2015

HYDRAULICS ENGINEER
NORTH CAROLINA PROFESSIONAL SEAL 21656 ENGINEER
RAPHAEL CORNELIUS WEADON
D8CA8A1D5B5A8A9...
8/10/2015

M A Engineering Consultants, Inc.
NC License: F-0160
598 East Chatham Street Suite 137 Cary, NC 27511
Phone: 919.297.0220 Fax: 919.297.0221

–LDETOUR–

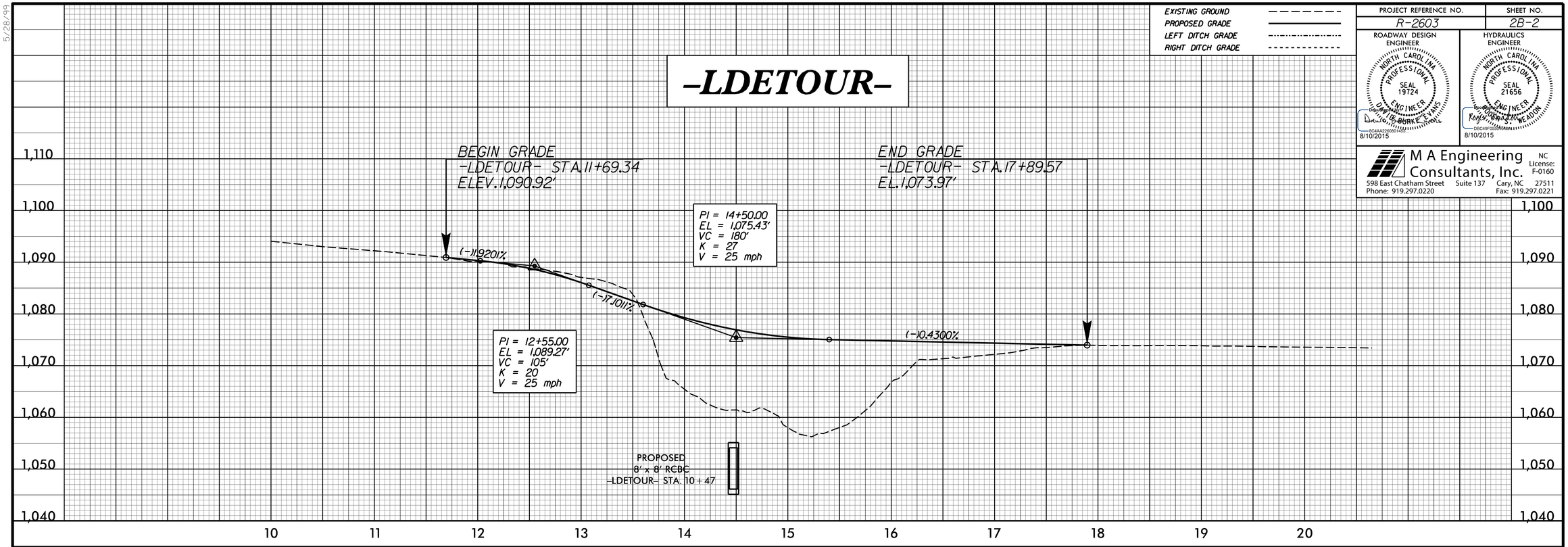

–Y7DET–

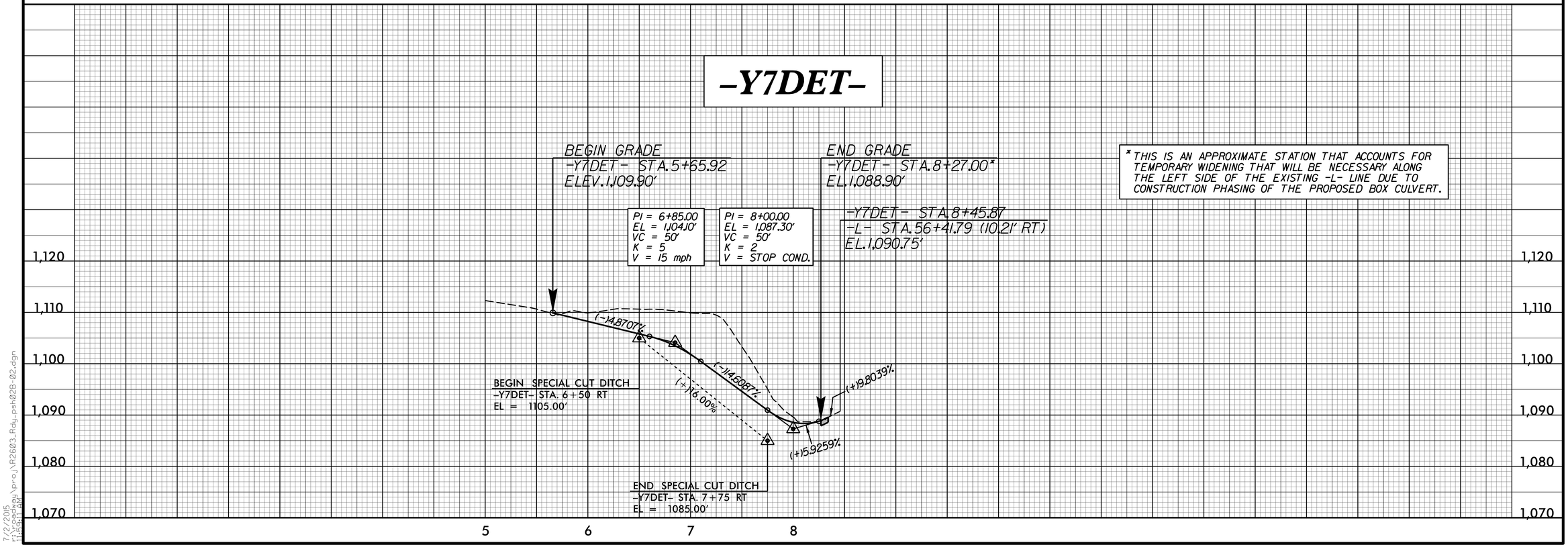

* THIS IS AN APPROXIMATE STATION THAT ACCOUNTS FOR TEMPORARY WIDENING THAT WILL BE NECESSARY ALONG THE LEFT SIDE OF THE EXISTING –L– LINE DUE TO CONSTRUCTION PHASING OF THE PROPOSED BOX CULVERT.

7/2/2015
r:\roadway\proj\R2603_Rdy_psh02B-02.dgn

DocuSign Envelope ID: DA518730-DB21-4CE9-928C-9D938A62EA59

8/17/99

REVISIONS

-Y9DET-
SIDNEY AVE. DETOUR

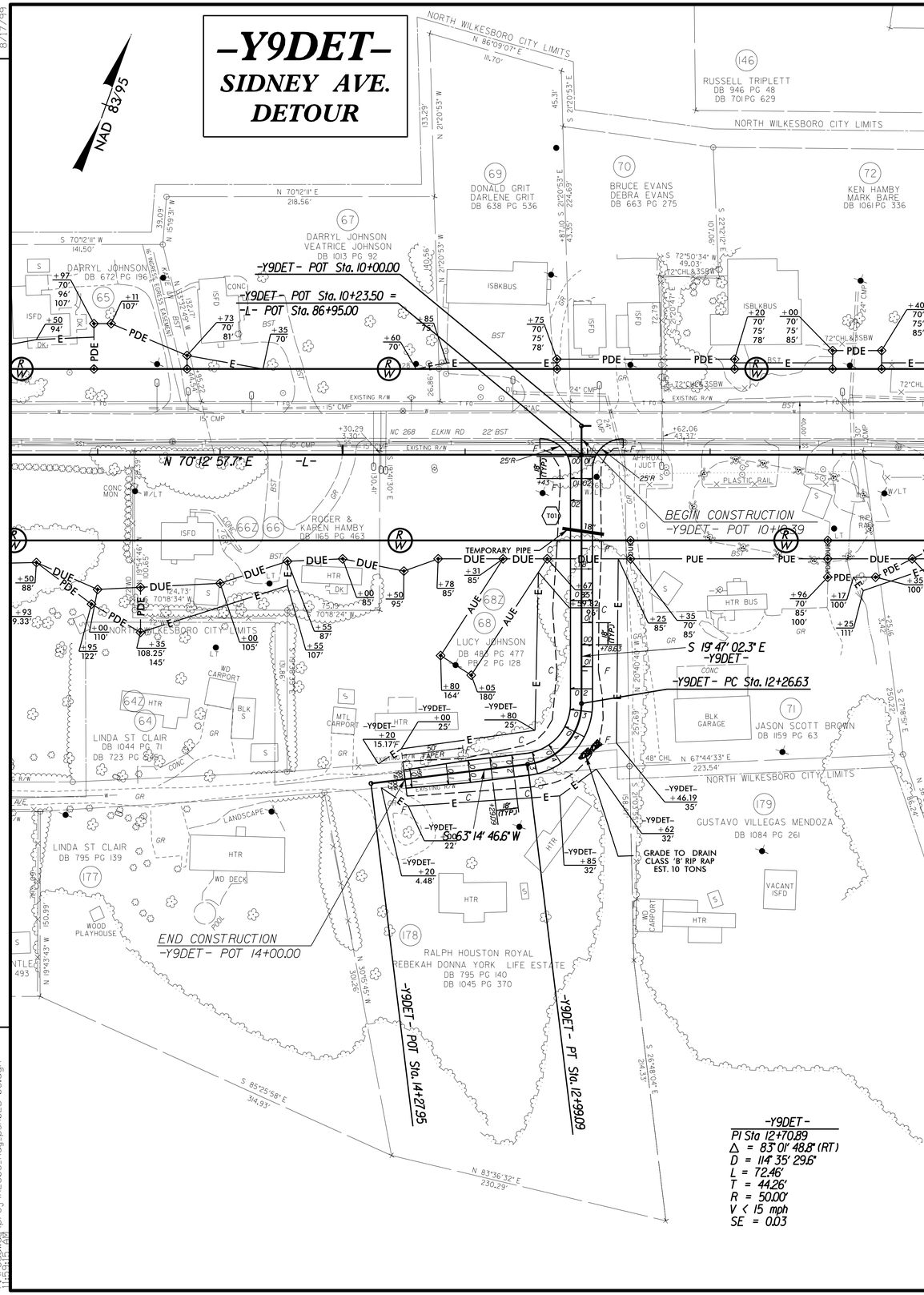

-Y9DET-
PI Sta 12+70.89
Δ = 83° 01' 48.8" (RT)
D = 114° 35' 29.6"
L = 72.46'
T = 44.26'
R = 50.00'
V < 15 mph
SE = 0.03

M A Engineering Consultants, Inc.
NC License: F-0160
598 East Chatham Street Suite 137 Cary, NC 27511
Phone: 919.297.0220 Fax: 919.297.0221

EXISTING GROUND
PROPOSED GRADE
LEFT DITCH GRADE
RIGHT DITCH GRADE

PROJECT REFERENCE NO.	SHEET NO.
R-2603	2B-3
R/W SHEET NO.	

ROADWAY DESIGN ENGINEER — NORTH CAROLINA PROFESSIONAL SEAL 19724 ENGINEER — DAVID BURKE EVANS — 8/10/2015

HYDRAULICS ENGINEER — NORTH CAROLINA PROFESSIONAL SEAL 21656 ENGINEER — ROBERT A. WEADON — 8/10/2015

-Y9DET-

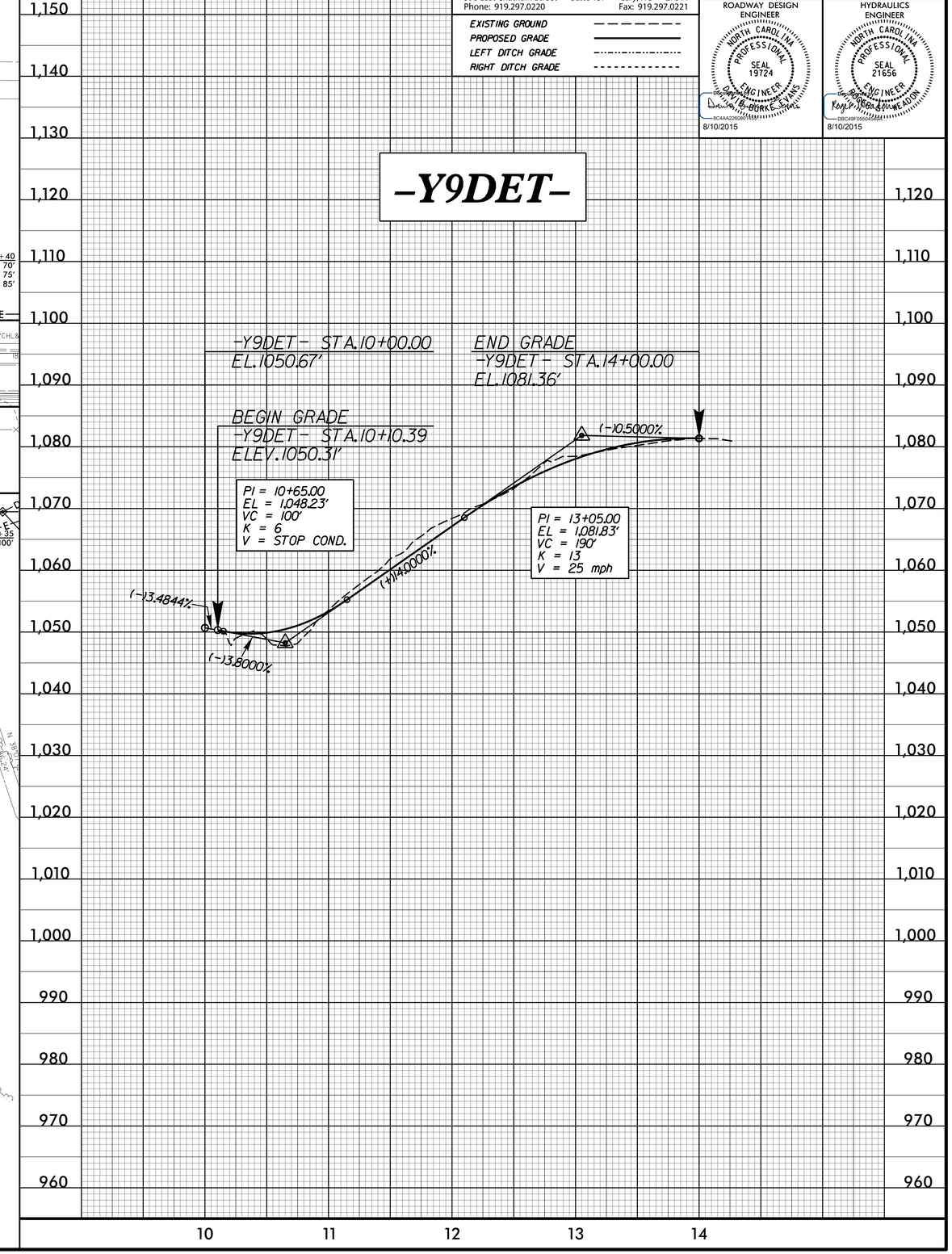

7/2/2015
11:10:29 AM
R:\Roadway\proj\R2603_Rdy_psh02B-03.dgn

DocuSign Envelope ID: DA518730-DB21-4CE9-928C-9D938A62EA59

-Y16DET-
SR 2090
DETOUR

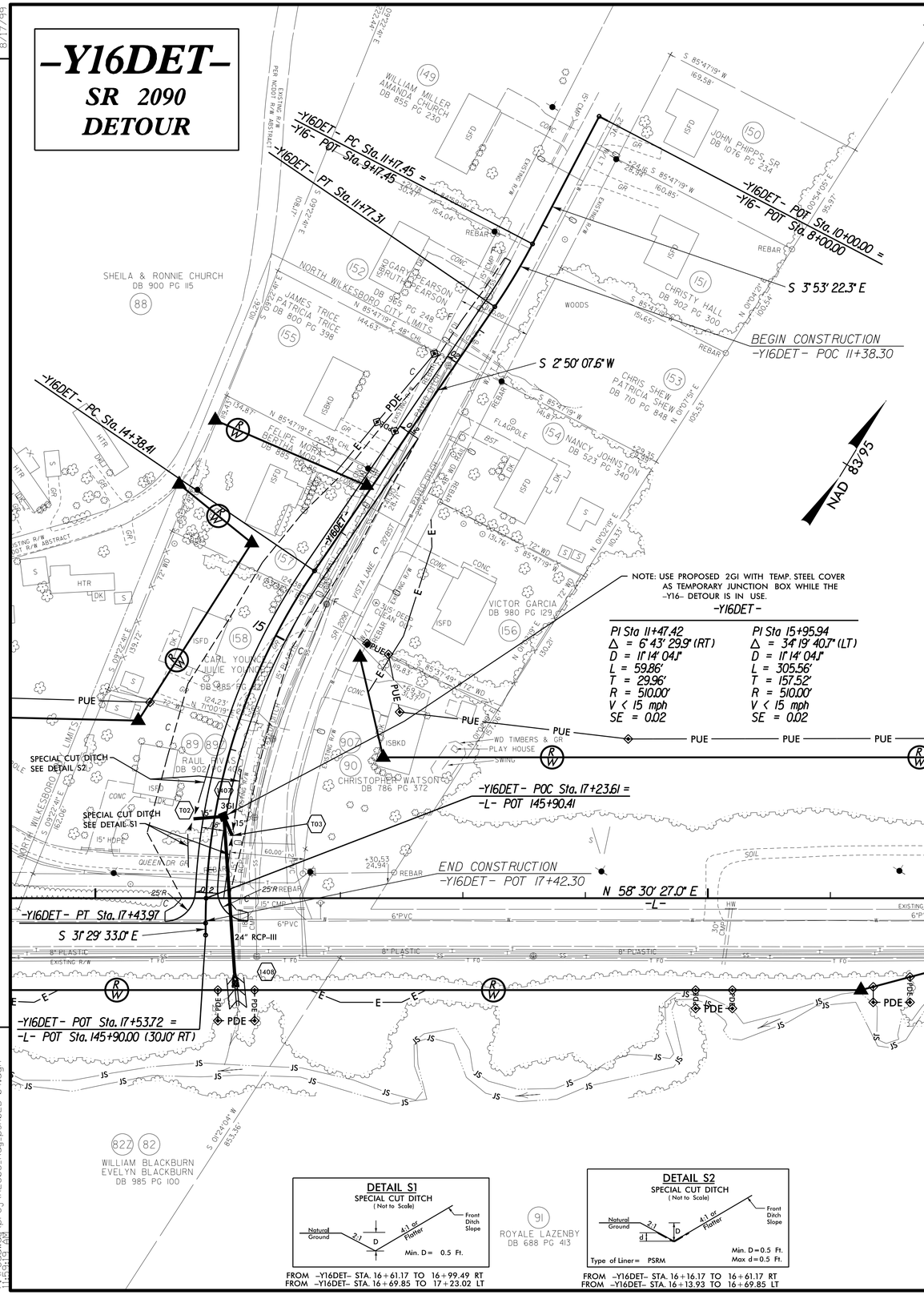

DETAIL S1
SPECIAL CUT DITCH
(Not to Scale)

FROM -Y16DET- STA. 16+61.17 TO 16+99.49 RT
FROM -Y16DET- STA. 16+69.85 TO 17+23.02 LT

DETAIL S2
SPECIAL CUT DITCH
(Not to Scale)

Type of Liner = PSRM

FROM -Y16DET- STA. 16+16.17 TO 16+61.17 RT
FROM -Y16DET- STA. 16+13.93 TO 16+69.85 LT

M A Engineering Consultants, Inc.
NC License: F-0160
598 East Chatham Street Suite 137 Cary, NC 27511
Phone: 919.297.0220 Fax: 919.297.0221

PROJECT REFERENCE NO.	SHEET NO.
R-2603	2B-4
R/W SHEET NO.	

EXISTING GROUND
PROPOSED GRADE
LEFT DITCH GRADE
RIGHT DITCH GRADE

ROADWAY DESIGN ENGINEER NORTH CAROLINA PROFESSIONAL SEAL 19724 ENGINEER DAVID BURKE EVANS
8/10/2015

HYDRAULICS ENGINEER NORTH CAROLINA PROFESSIONAL SEAL 21656 ENGINEER ROBERT KONY MADDEN
8/10/2015

-Y16DET-

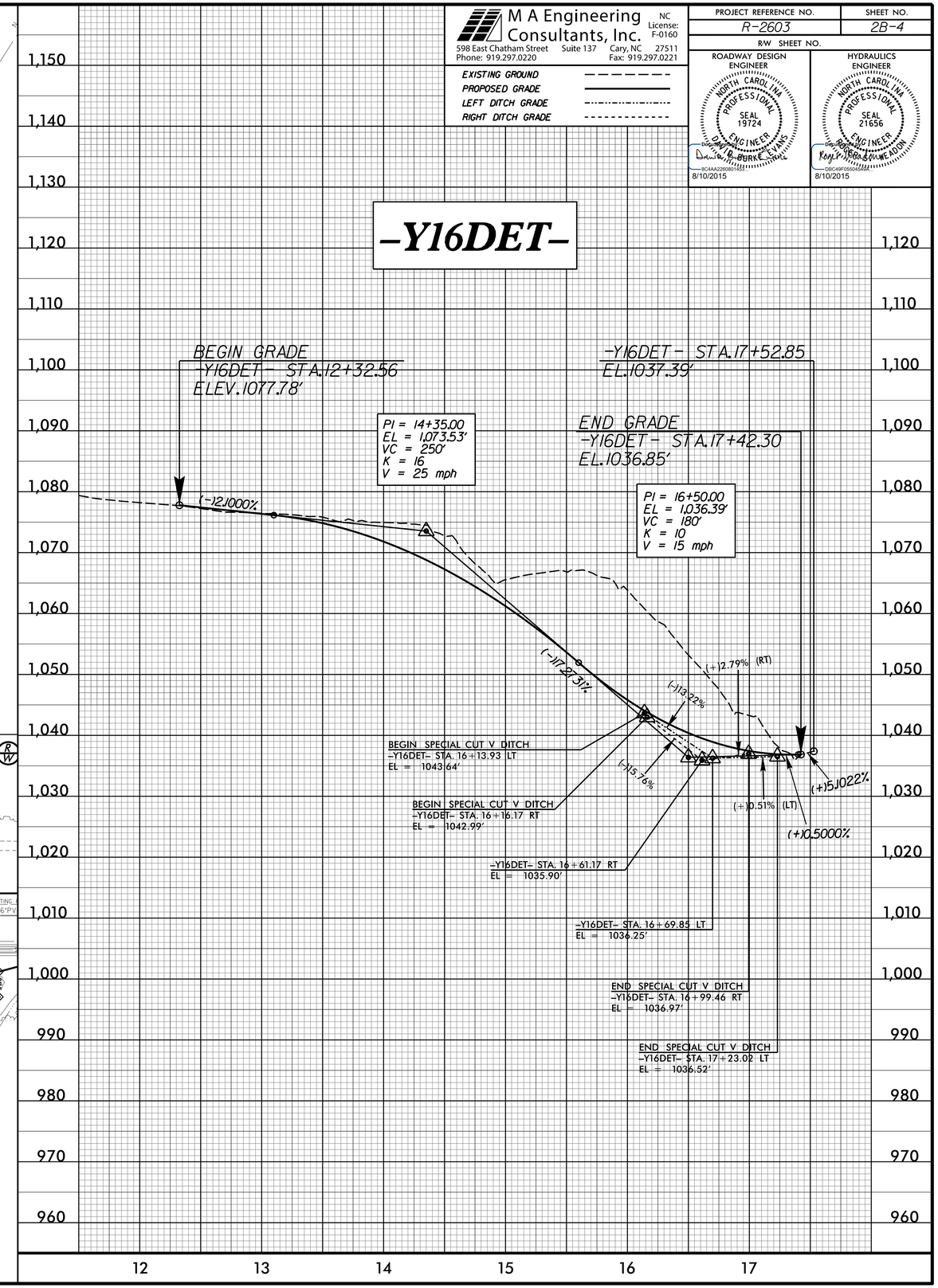

REVISIONS

8/17/99

7/2/2015
11:10:09 AM
\projects\R2603_Rdy_psh02B-04.dgn

DocuSign Envelope ID: DA518730-DB21-4CE9-928C-9D938A62EA59

PROJECT REFERENCE NO.	SHEET NO.
R-2603	2B-5
R/W SHEET NO.	

ROADWAY DESIGN ENGINEER

NORTH CAROLINA PROFESSIONAL SEAL 19724 ENGINEER DAVID BURKE EVANS

DocuSigned by: David Burke Evans
8C4AA22680801453...
8/10/2015

M A Engineering Consultants, Inc.
NC License: F-0160
598 East Chatham Street Suite 137 Cary, NC 27511
Phone: 919.297.0220 Fax: 919.297.0221

SCALE 0 50 100

INTERSECTION DETAILS

NOTE:
LOCATIONS OF WHEELCHAIR RAMP SYMBOLS (CR) ARE APPROXMATE.
REFER TO THE PAVEMENT MARKING PLANS FOR EXACT LOCATIONS.

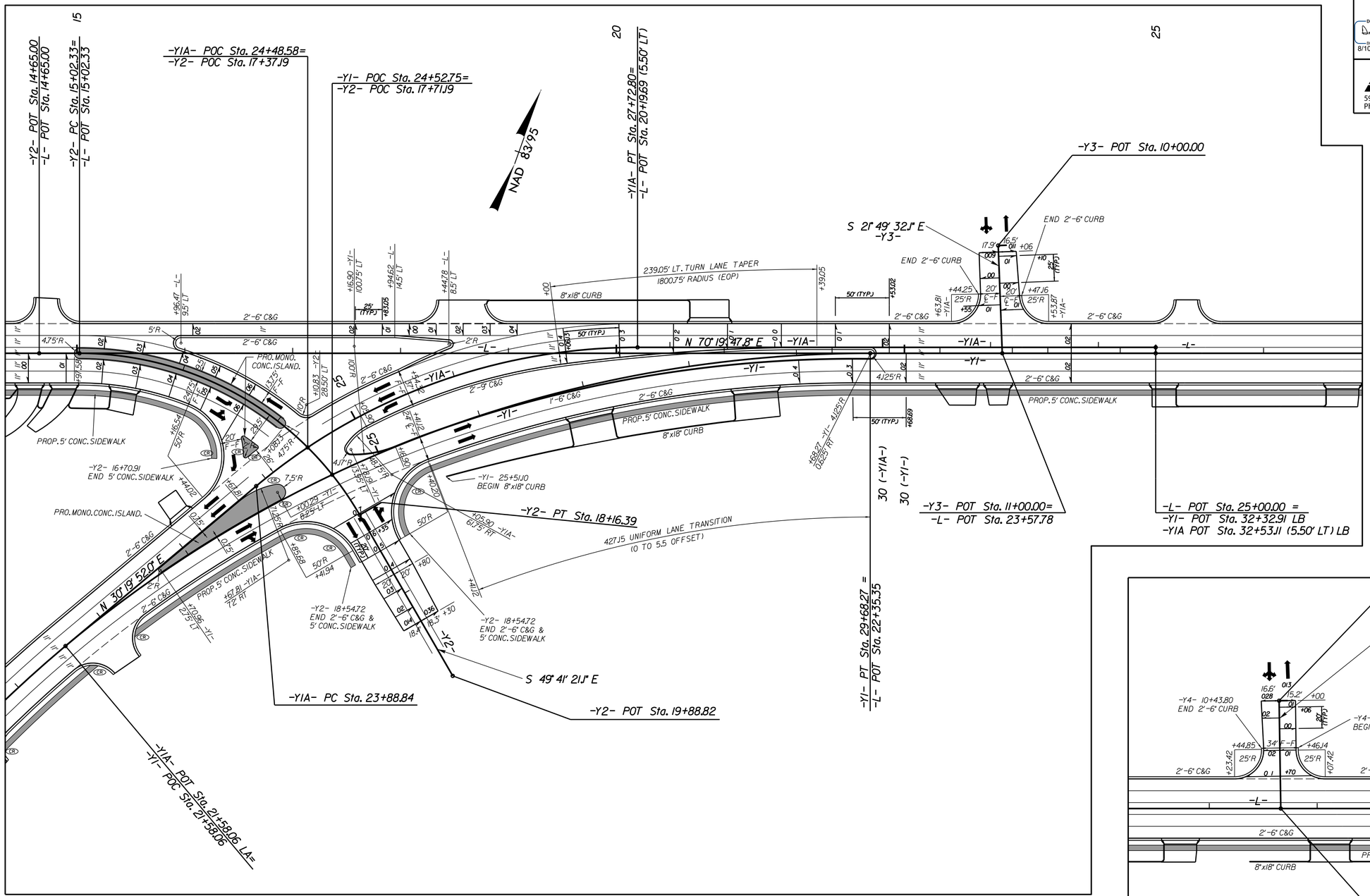

NC 268 (-Y1-/-Y1A-) ELKIN RD./
FLINT HILL RD. (-Y2-) INTERSECTION DETAIL

SEE SHEET 4 FOR PLAN VIEW

NC 268 (-Y1-/-Y1A-) ELKIN RD./
SCHOOL BUS DR. (-Y3-) INTERSECTION DETAIL

SEE SHEET 5 FOR PLAN VIEW

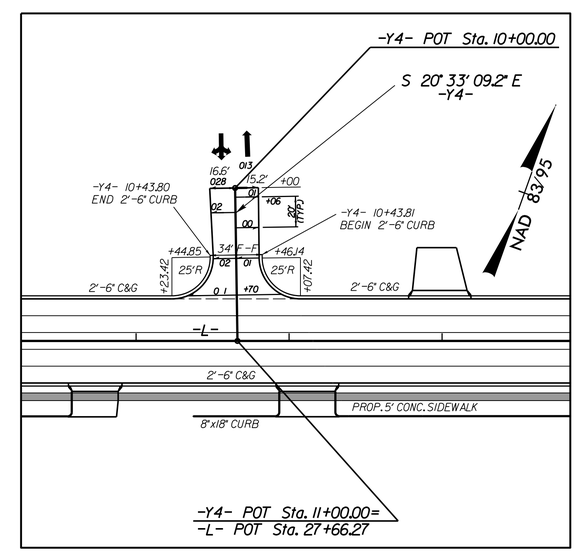

NC 268 (-L-) ELKIN RD./
TEMPLE ST. (-Y4-) INTERSECTION DETAIL

SEE SHEET 5 FOR PLAN VIEW

8/17/99

7/2/2015
11:09:34 AM
R:\Roadway\proj\R2603_Rdy_psh\02B-05.dgn

DocuSign Envelope ID: DA518730-DB21-4CE9-928C-9D938A62EA59

8/17/99

PROJECT REFERENCE NO.	SHEET NO.
R-2603	2B-6
R/W SHEET NO.	

ROADWAY DESIGN ENGINEER

NORTH CAROLINA PROFESSIONAL SEAL 19724 ENGINEER DAVID BURKE EVANS

DocuSigned by: David Burke Evans
8C4AA32608014 53...
8/10/2015

M A Engineering Consultants, Inc.
NC License: F-0160
598 East Chatham Street Suite 137 Cary, NC 27511
Phone: 919.297.0220 Fax: 919.297.0221

SCALE 0 50 100

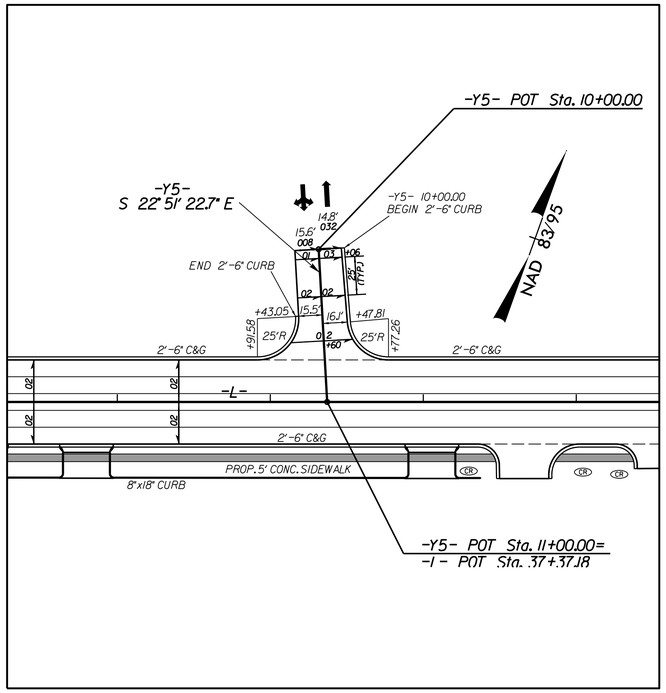

NC 268 (-L-) ELKIN RD./
WHITE PINE ST. (-Y5-) INTERSECTION DETAIL

SEE SHEET 6 FOR PLAN VIEW

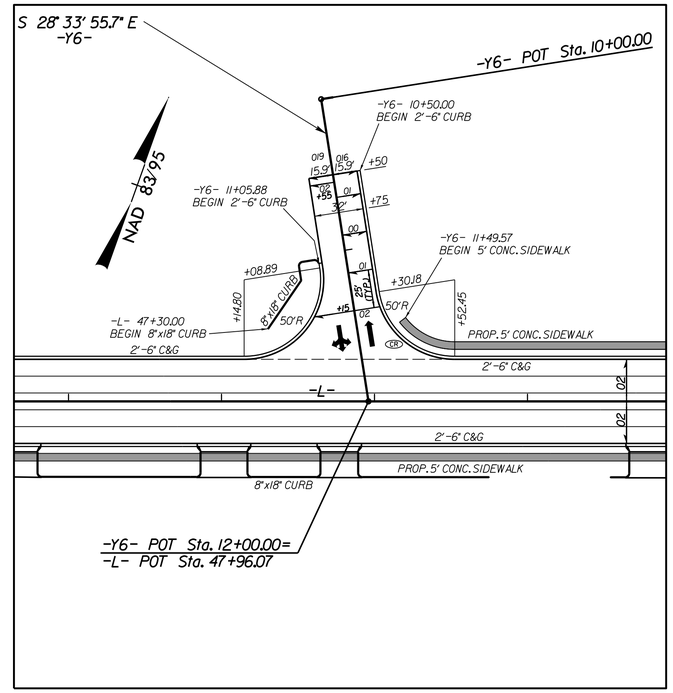

NC 268 (-L-) ELKIN RD./
SHAVER ST. (-Y6-) INTERSECTION DETAIL

SEE SHEET 6 FOR PLAN VIEW

INTERSECTION DETAILS

NOTE:
LOCATIONS OF WHEELCHAIR RAMP SYMBOLS (CR) ARE APPROXMATE. REFER TO THE PAVEMENT MARKING PLANS FOR EXACT LOCATIONS.

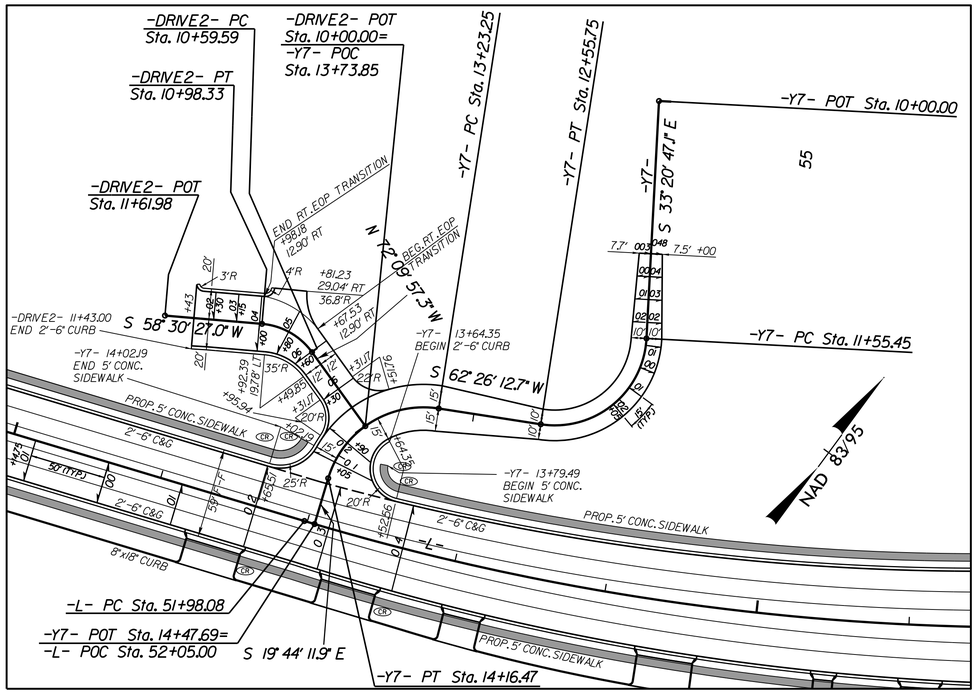

NC 268 (-L-) ELKIN RD./
LEGION DR. (-Y7-) INTERSECTION DETAIL

SEE SHEET 7 FOR PLAN VIEW

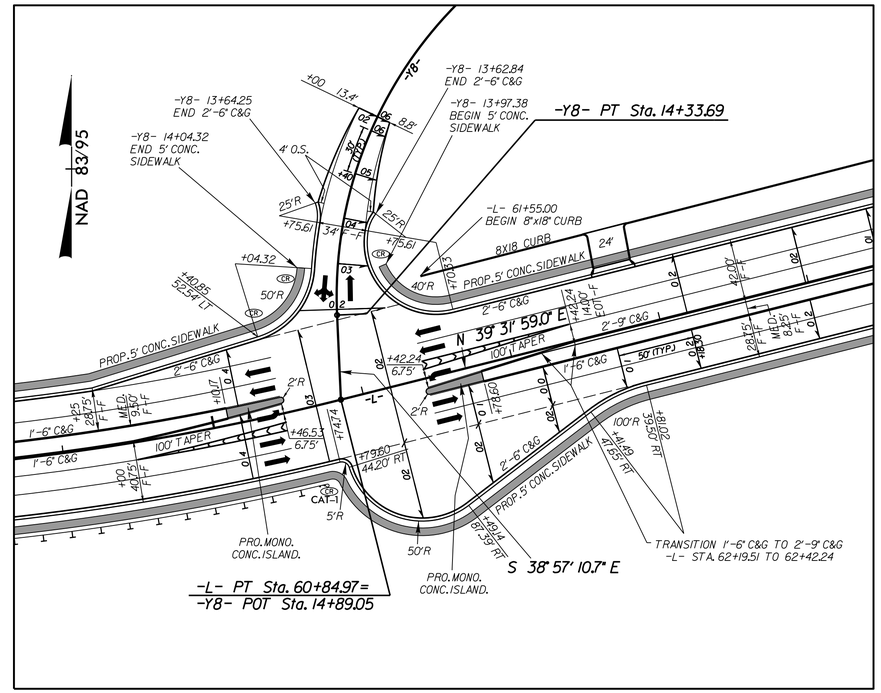

NC 268 (-L-) ELKIN RD./
FAIRPLAINS RD. (-Y8-) INTERSECTION DETAIL

SEE SHEET 7 FOR PLAN VIEW

7/2/2015
11:29:24 AM \proj\R2603_Rdy_psh028-06.dgn

DocuSign Envelope ID: DA518730-DB21-4CE9-928C-9D938A62EA59

8/17/99

PROJECT REFERENCE NO.	SHEET NO.
R-2603	2B-7
R/W SHEET NO.	

ROADWAY DESIGN ENGINEER

NORTH CAROLINA PROFESSIONAL SEAL 19724 ENGINEER DAVID BURKE EVANS

DocuSigned by: David Burke Evans
8C4AA3260801453...
8/10/2015

M A Engineering Consultants, Inc.
NC License: F-0160
598 East Chatham Street Suite 137 Cary, NC 27511
Phone: 919.297.0220 Fax: 919.297.0221

SCALE 0 50 100

INTERSECTION DETAILS

NOTE:
LOCATIONS OF WHEELCHAIR RAMP SYMBOLS (CR) ARE APPROXMATE. REFER TO THE PAVEMENT MARKING PLANS FOR EXACT LOCATIONS.

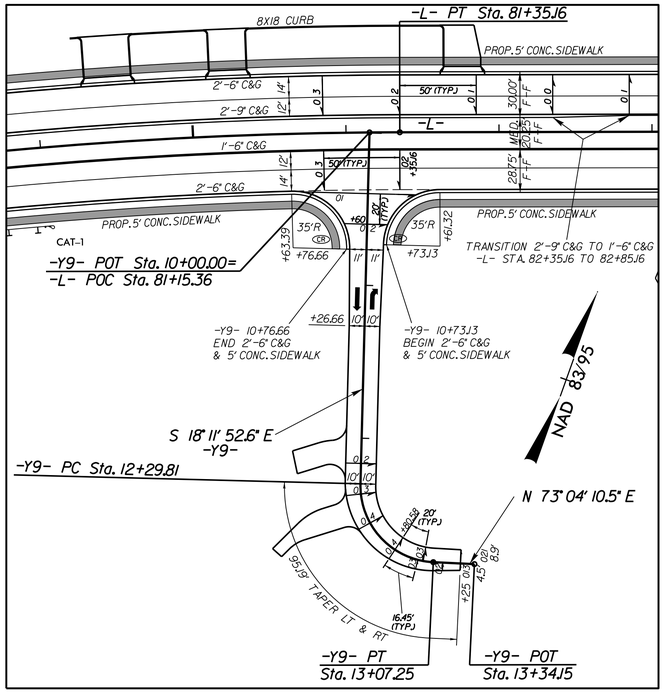

NC 268 (-L-) ELKIN RD./
SIDNEY AVE. (-Y9-) INTERSECTION DETAIL

SEE SHEET 9 FOR PLAN VIEW

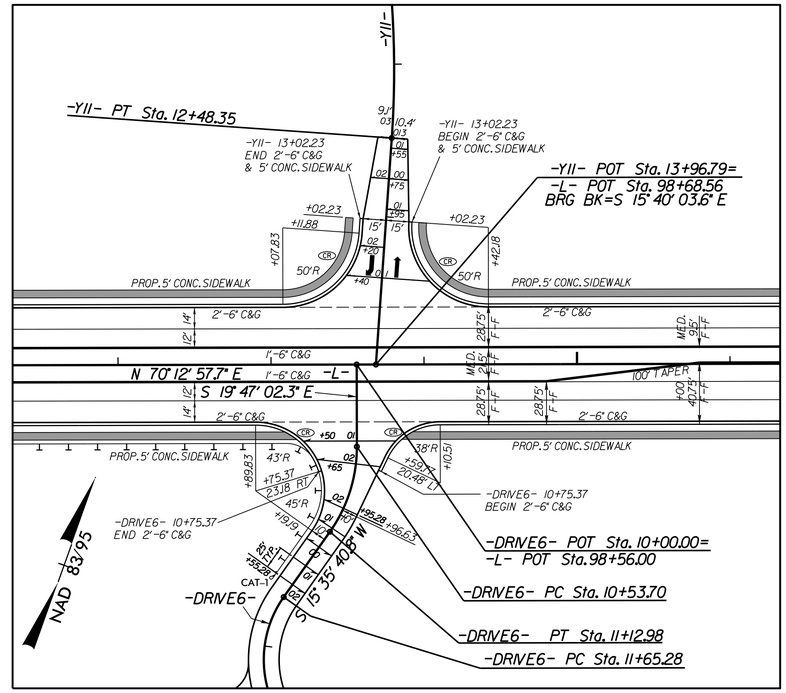

NC 268 (-L-) ELKIN RD./
AARON CALL RD. (-Y11-) INTERSECTION DETAIL

SEE SHEET 10 FOR PLAN VIEW

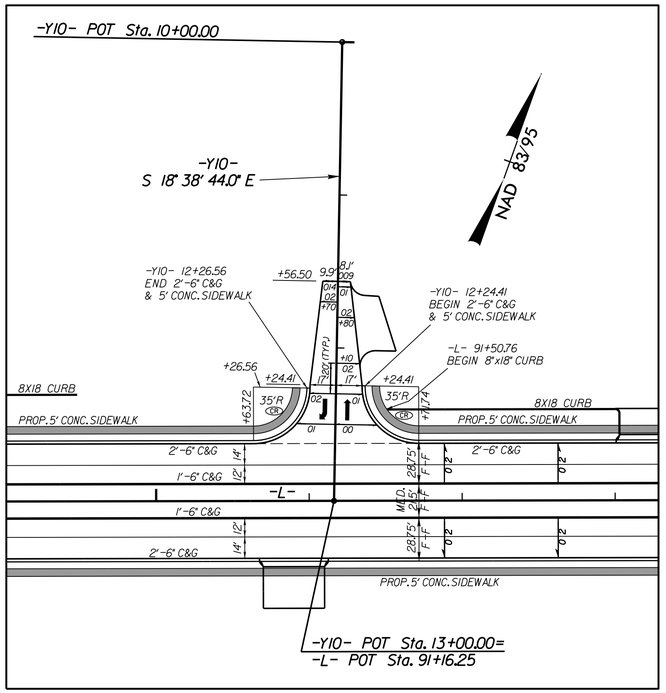

NC 268 (-L-) ELKIN RD./
PEBBLE ST. (-Y10-) INTERSECTION DETAIL

SEE SHEET 9 FOR PLAN VIEW

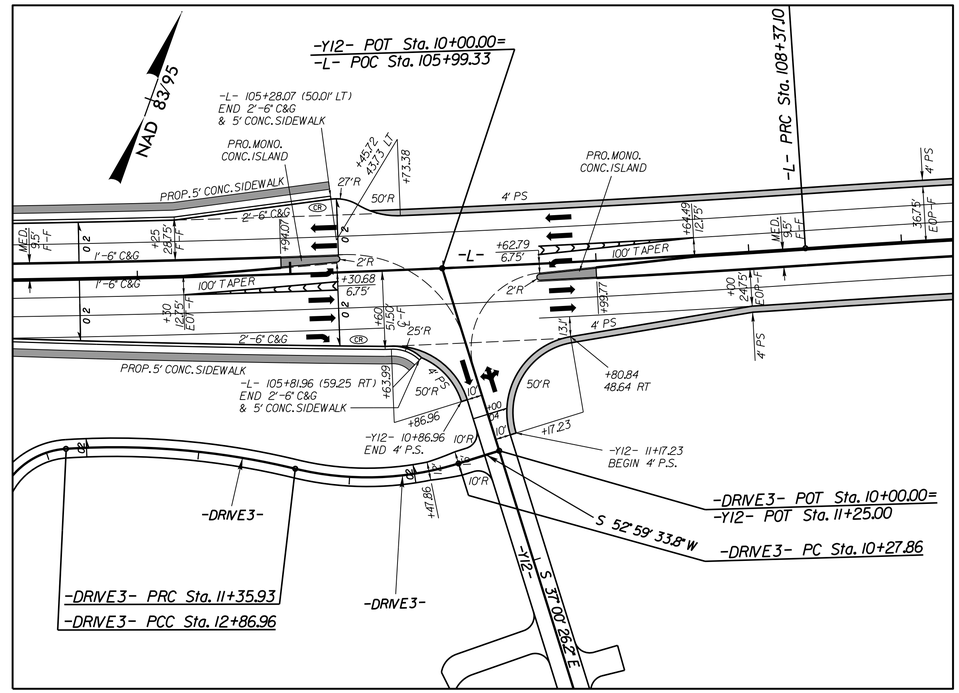

NC 268 (-L-) ELKIN RD./
FLINT HILL RD. (-Y12-) INTERSECTION DETAIL

SEE SHEET 11 FOR PLAN VIEW

7/2/2015
rt:\c2603\proj\R2603_Rdy_psh02B-07.dgn

DocuSign Envelope ID: DA518730-DB21-4CE9-928C-9D938A62EA59

8/17/99

PROJECT REFERENCE NO.	SHEET NO.
R-2603	2B-8
R/W SHEET NO.	

ROADWAY DESIGN ENGINEER

NORTH CAROLINA PROFESSIONAL SEAL 19724 ENGINEER DAVID BURKE EVANS

DocuSigned by: David Burke Evans
BC4AAA22B0801453...
8/10/2015

M A Engineering Consultants, Inc.
NC License: F-0160
598 East Chatham Street Suite 137 Cary, NC 27511
Phone: 919.297.0220 Fax: 919.297.0221

SCALE 0 50 100

INTERSECTION DETAILS

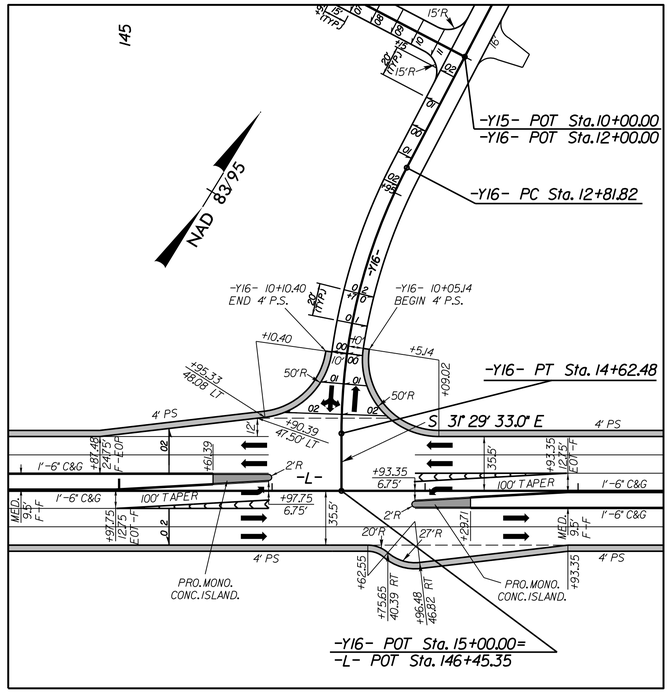

NC 268 (-L-) ELKIN RD./
VISTA LN. (-Y16-) INTERSECTION DETAIL

SEE SHEET 14 FOR PLAN VIEW

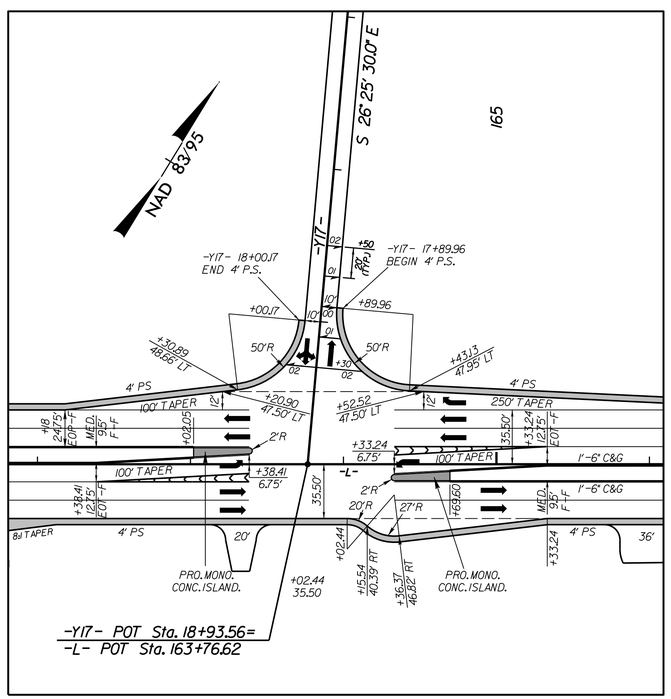

NC 268 (-L-) ELKIN RD./
BEAUMONT POPLAR ST. (-Y17-) INTERSECTION DETAIL

SEE SHEET 15 FOR PLAN VIEW

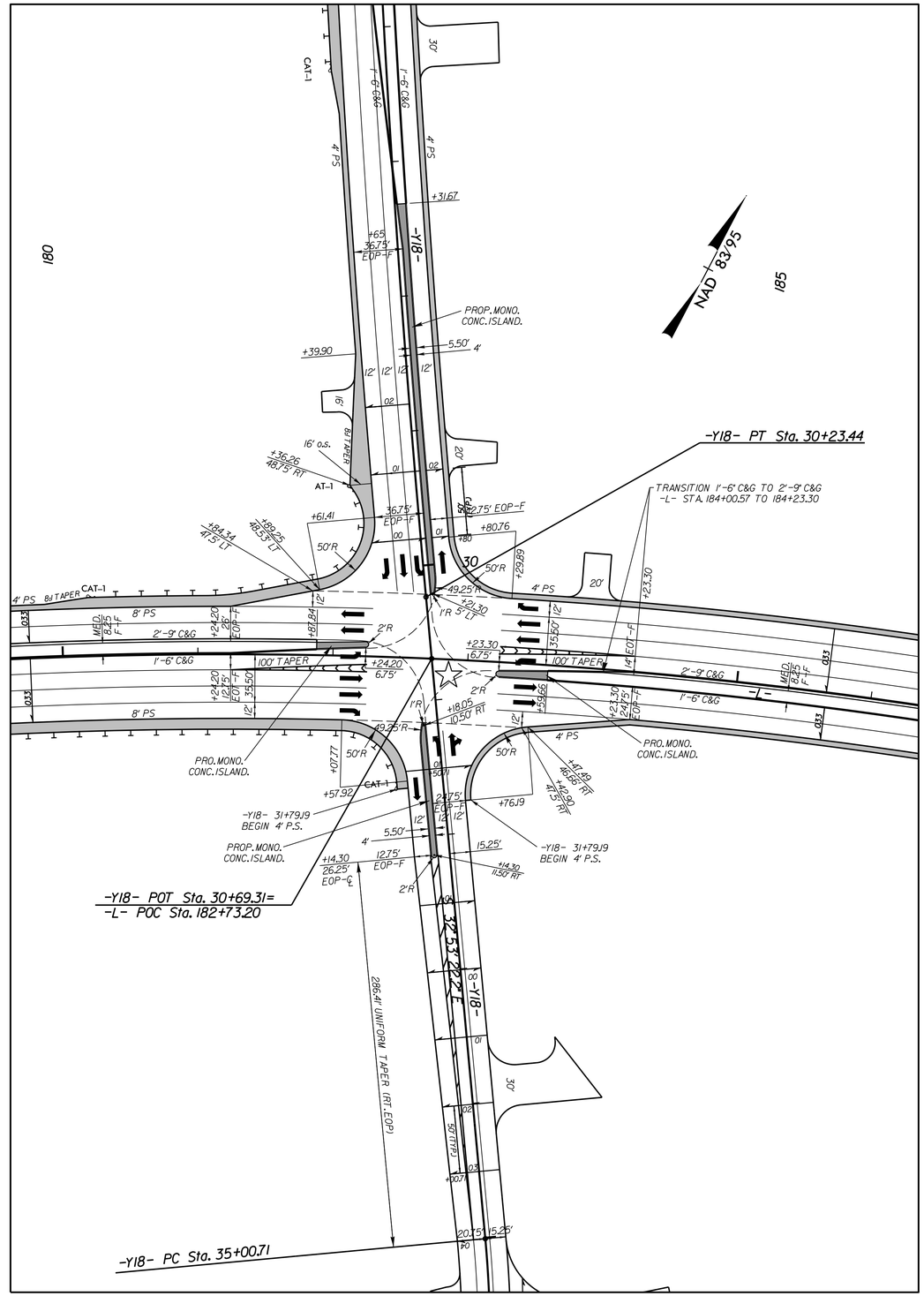

NC 268 (-L-) ELKIN RD./
AIRPORT RD./RIVER LIBERTY GROVE CHURCH RD. (-Y18-) INTERSECTION DETAIL

SEE SHEET 16 FOR PLAN VIEW

7/2/2015
11:53:44 AM
I:\Roadway\proj\R2603_Rdy_psh02B-08.dgn

DocuSign Envelope ID: DA518730-DB21-4CE9-928C-9D938A62EA59

PROJECT REFERENCE NO.	SHEET NO.
R-2603	2B-9
R/W SHEET NO.	

ROADWAY DESIGN ENGINEER — NORTH CAROLINA PROFESSIONAL SEAL 19724 ENGINEER — DAVID B. BURKE-EVANS — 8/10/2015

HYDRAULICS ENGINEER — NORTH CAROLINA PROFESSIONAL SEAL 21656 ENGINEER — KAYLA R. WEADON — 8/10/2015

M A Engineering Consultants, Inc.
NC License: F-0160
598 East Chatham Street Suite 137 Cary, NC 27511
Phone: 919.297.0220 Fax: 919.297.0221

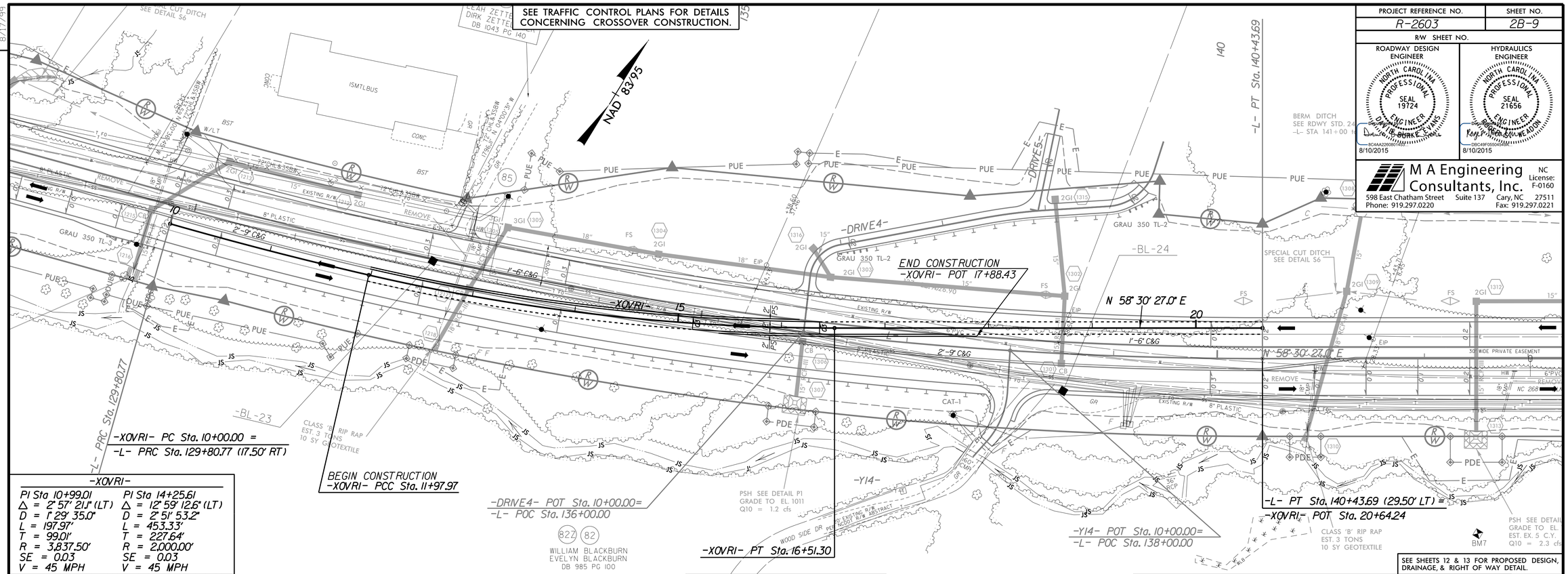

-XOVRI-

PI Sta 10+99.01	PI Sta 14+25.61
Δ = 2° 57' 21.1" (LT)	Δ = 12° 59' 12.6" (LT)
D = 1° 29' 35.0"	D = 2° 51' 53.2"
L = 197.97'	L = 453.33'
T = 99.01'	T = 227.64'
R = 3,837.50'	R = 2,000.00'
SE = 0.03	SE = 0.03
V = 45 MPH	V = 45 MPH

-XOVRI-

NOTE:
THE GRADE AS SHOWN TIES TO THE PROPOSED -L- CONSTRUCTION 1.5' BELOW FINAL GRADE. THE GRADE MAY BE ADJUSTED TO SUIT FIELD CONDITIONS AT THE TIME OF CROSSOVER CONSTRUCTION AT THE DIRECTION OF THE ENGINEER.

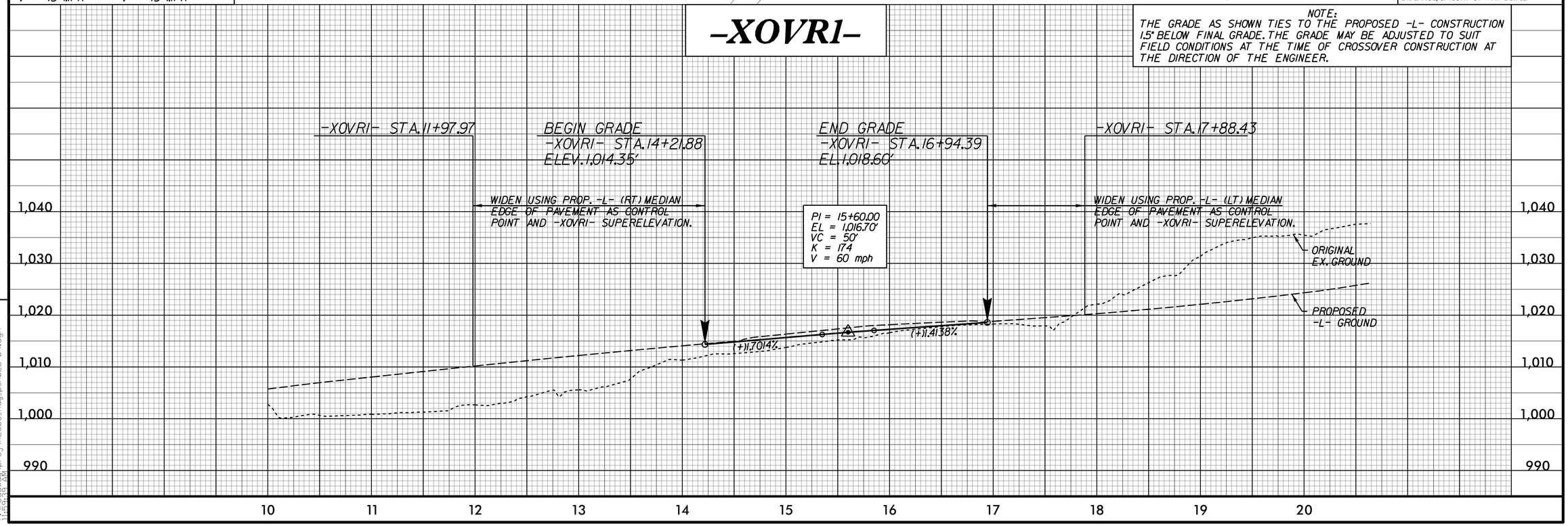

REVISIONS

8/17/99

7/2/2015
R:\Roadway\proj\R2603_Rdy_psh02B-09.dgn

DocuSign Envelope ID: DA518730-DB21-4CE9-928C-9D938A62EA59

8/17/99

REVISIONS

SEE TRAFFIC CONTROL PLANS FOR DETAILS CONCERNING CROSSOVER CONSTRUCTION.

-XOVR2-	
PI Sta 12+27.70	PI Sta 21+98.77
Δ = 3° 31' 14.9" (RT)	Δ = 3° 16' 26.5" (RT)
D = 0° 57' 17.7"	D = 1° 39' 03.4"
L = 368.70'	L = 198.31'
T = 184.41'	T = 99.18'
R = 6,000.00'	R = 3,470.50'
SE = 0.02	SE = 0.033
V = 45 MPH	V = 45 MPH

SEE SHEETS 15 & 16 FOR PROPOSED DESIGN, DRAINAGE, & RIGHT OF WAY DETAIL.

PROJECT REFERENCE NO.	SHEET NO.
R-2603	2B-10
R/W SHEET NO.	

ROADWAY DESIGN ENGINEER — NORTH CAROLINA PROFESSIONAL SEAL 19724 — ENGINEER — DAVID BURKE EVANS — 8CAAA2266A6444... — 8/10/2015

HYDRAULICS ENGINEER — NORTH CAROLINA PROFESSIONAL SEAL 21656 — ENGINEER — RONALD W. MEADOR — 8F2A9F6B5C5444... — 8/10/2015

M A Engineering Consultants, Inc.
NC License: F-0160
598 East Chatham Street Suite 137 Cary, NC 27511
Phone: 919.297.0220 Fax: 919.297.0221

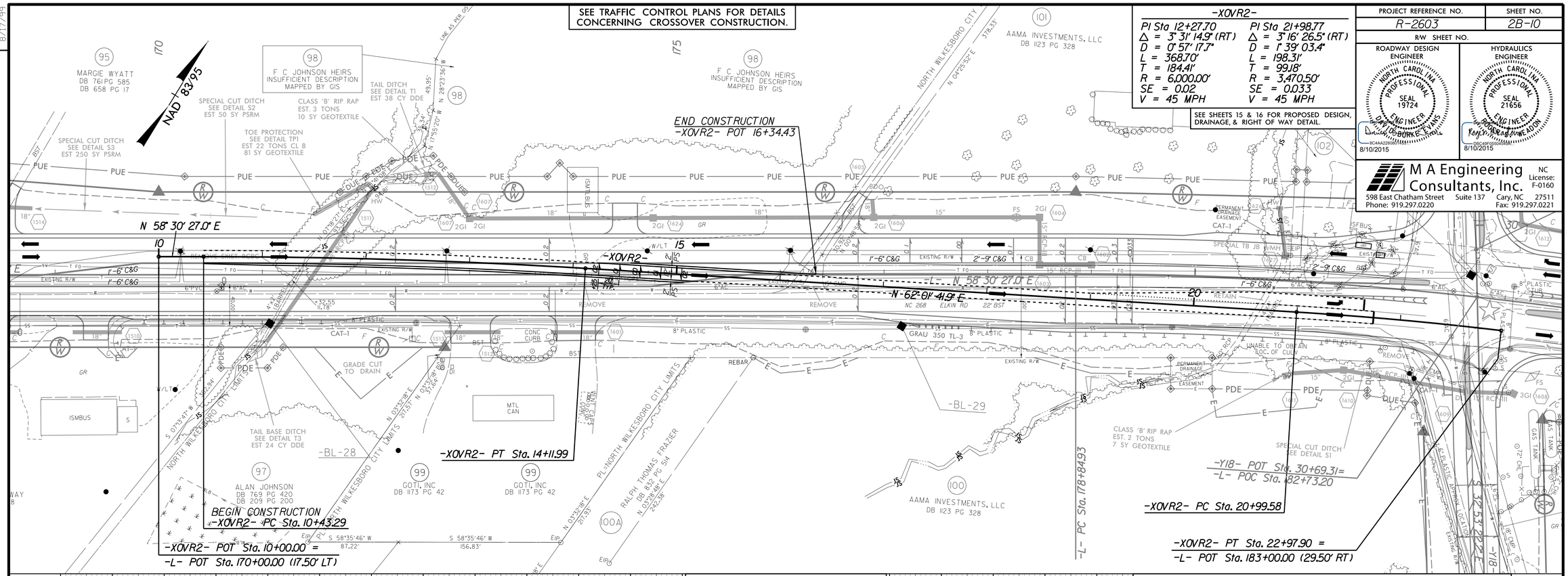

-XOVR2-

NOTE:
THE GRADE AS SHOWN TIES TO THE PROPOSED -L- CONSTRUCTION 1.5' BELOW FINAL GRADE. THE GRADE MAY BE ADJUSTED TO SUIT FIELD CONDITIONS AT THE TIME OF CROSSOVER CONSTRUCTION AT THE DIRECTION OF THE ENGINEER.

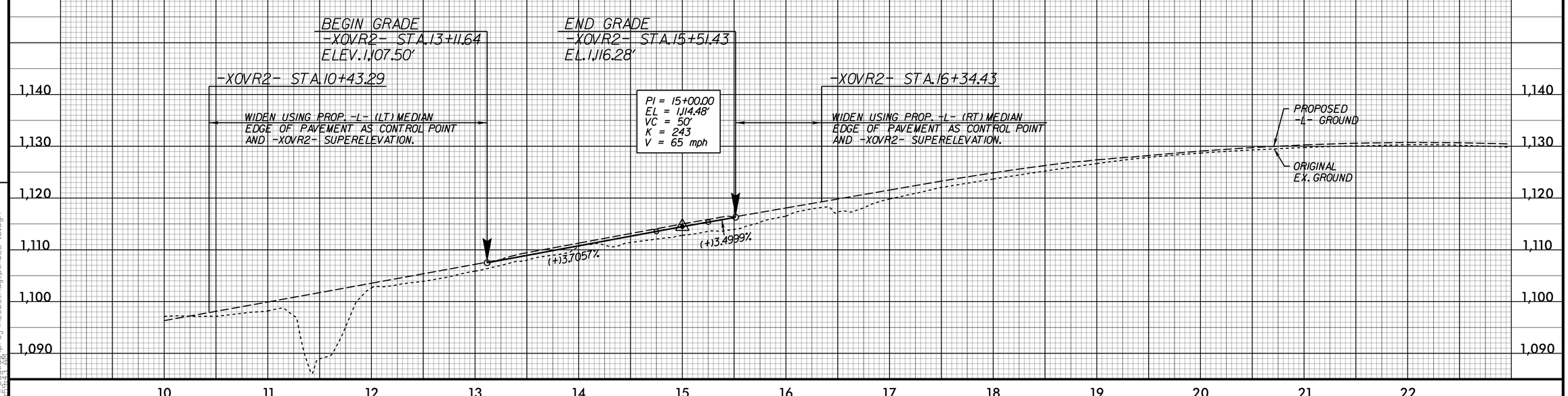

7/2/2015
11:02:24 AM
pw:\\pwdenpw\proj\R2603_Rdy_psh02B-10.dgn

PROJECT REFERENCE NO.	SHEET NO.
R-2603	2C-1

STATE OF
NORTH CAROLINA
DEPT. OF TRANSPORTATION
DIVISION OF HIGHWAYS
RALEIGH, N.C.

ENGLISH DETAIL DRAWING FOR

2′-9″ CONCRETE CURB & GUTTER

SHEET 1 OF 1

846D01

GENERAL NOTES:
- PLACE CONTRACTION JOINTS AT 10′ INTERVALS, EXCEPT THAT A 15′ SPACING MAY BE USED WHEN A MACHINE IS USED OR WHEN SATISFACTORY SUPPORT FOR THE FACE FORM CAN BE OBTAINED WITHOUT THE USE OF TEMPLATES AT 10′ INTERVALS.
- JOINT SPACING MAY BE ALTERED IF REQUIRED BY THE ENGINEER.
- CONTRACTION JOINTS MAY BE INSTALLED WITH THE USE OF TEMPLATES OR FORMED BY OTHER APPROVED METHODS. MAKE NON-TEMPLATE FORMED JOINTS A MIN. OF 1½″ DEEP.
- FILL ALL CONSTRUCTION JOINTS WITH JOINT FILLER AND SEALER.
- SPACE EXPANSION JOINTS AT 90′ INTERVALS AND ADJACENT TO ALL RIGID OBJECTS.
- SEE RDWY. STD. DWG. NO. 846.01, SHEET 2 OF 3 FOR PLACEMENT IN SUPERELEVATIONS. (USE 2′-6″ CURB AND GUTTER RATES)

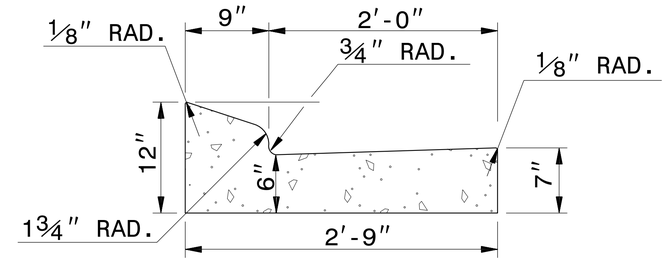

2′-9″ CURB AND GUTTER

SECTION VIEW OF CURB AND GUTTER

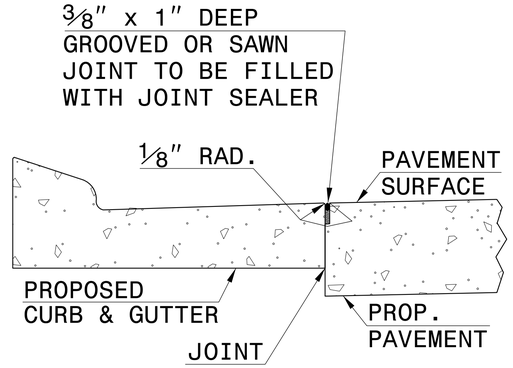

LONGITUDINAL JOINT

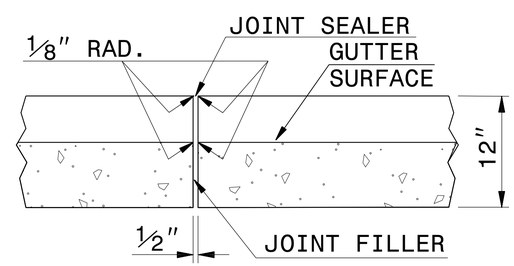

TRANSVERSE EXPANSION JOINT IN CURB AND GUTTER

SECTION VIEW OF JOINTS

STATE OF
NORTH CAROLINA
DEPT. OF TRANSPORTATION
DIVISION OF HIGHWAYS
RALEIGH, N.C.

ENGLISH DETAIL DRAWING FOR

2′-9″ CONCRETE CURB & GUTTER

SHEET 1 OF 1

846D01

8/11/2015

NORTH CAROLINA PROFESSIONAL SEAL 022966 ENGINEER Joel S. Howerton

DocuSigned by: Joel Howerton
873F3D17DCDC45F...

CONTRACT STANDARDS AND DEVELOPMENT UNIT
Office 919-707-6950 FAX 919-250-4119

SEE PLATE FOR TITLE

ORIGINAL BY: STD. 846.01 DATE:
MODIFIED BY: E.E. WARD DATE: 8-15-00
CHECKED BY: DATE:
FILE SPEC.: /usr/details/stand/c&g2′-9″.dgn

$$$$SYSTIME$$$$
$$$$USERNAME$$$$
$$$$DGNFILE$$$$

PROJECT REFERENCE NO.	SHEET NO.
R-2603	2C-2

NOTE: SEE STD.DWG. 846.01 FOR 2'-6" CURB AND GUTTER INFORMATION.

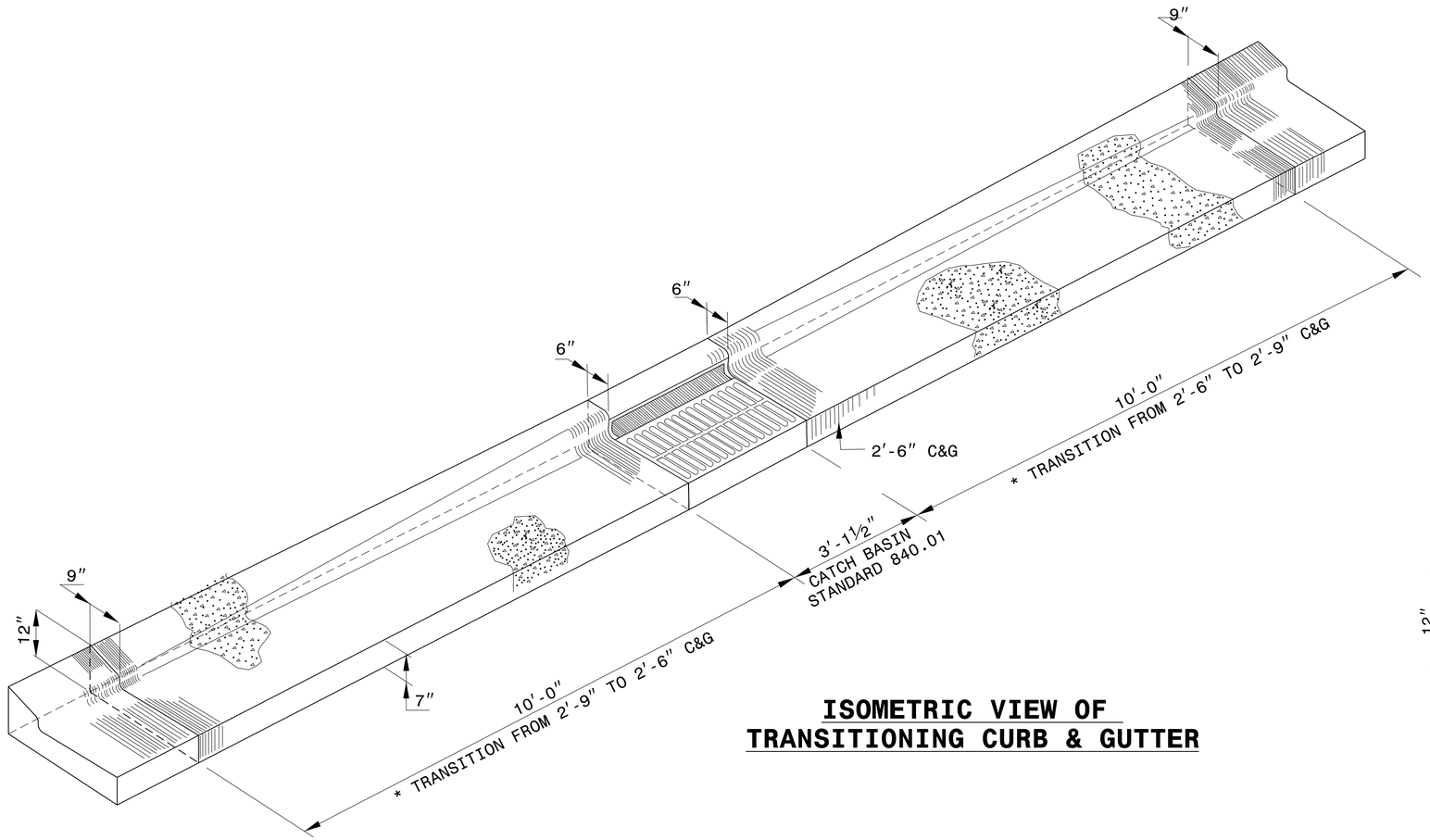

ISOMETRIC VIEW OF TRANSITIONING CURB & GUTTER

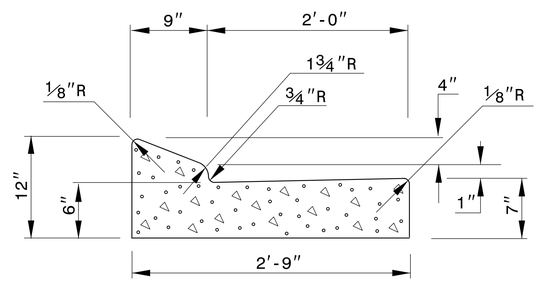

PROPOSED 2'-9" CURB & GUTTER

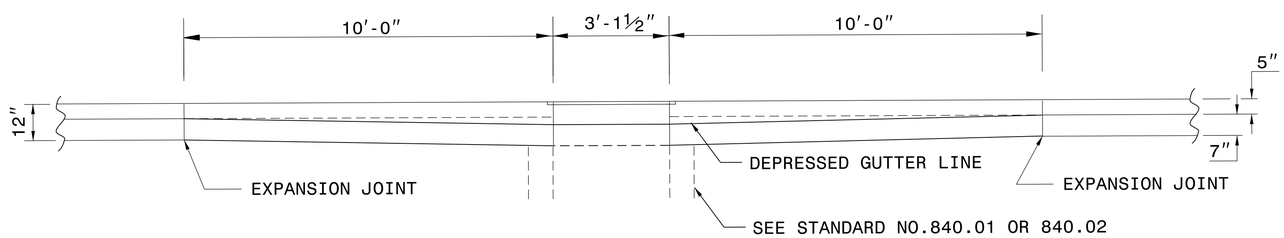

ELEVATION

* MAINTAIN THE EDGE OF PAVEMENT. TRANSITION THE CURB ALONG THE BACK OF THE CURB.

8/11/2015

NORTH CAROLINA PROFESSIONAL ENGINEER SEAL 022966 Joel S. Howerton

DocuSigned by: Joel Howerton 873F3D17DCDC45F...

CONTRACT STANDARDS AND DEVELOPMENT UNIT
Office 919-707-6950 FAX 919-250-4119

DETAIL OF 2'-9" TO 2'-6" CURB & GUTTER TRANSITION SECTION

ORIGINAL BY: _____ DATE: _____
MODIFIED BY: tspell DATE: july 14,2009
CHECKED BY: _____ DATE: _____
FILE SPEC.: s:eric/usr/details/stand/cgtranst.dgn

$$$$SYTME$$$$
$$$$SCNAME$$$$
$$$$USRNAME$$$$

5/14/99

PROJECT REFERENCE NO.	SHEET NO.
R-2603	2C-3

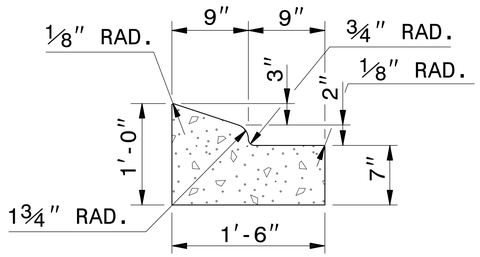

1'-6" CURB AND GUTTER

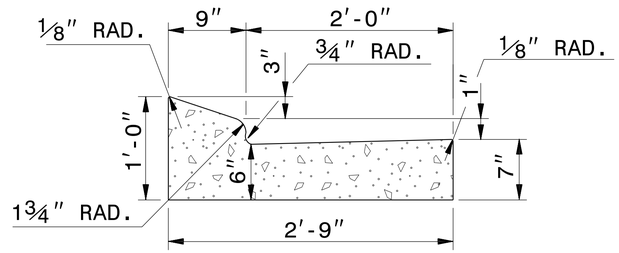

2'-9" CURB AND GUTTER

NOTE: SEE STD. DWG. 846.01 FOR ADDITIONAL CURB AND GUTTER INFORMATION.

SEE ROADWAY PLANS FOR LOCATION OF CURB TRANSITION.

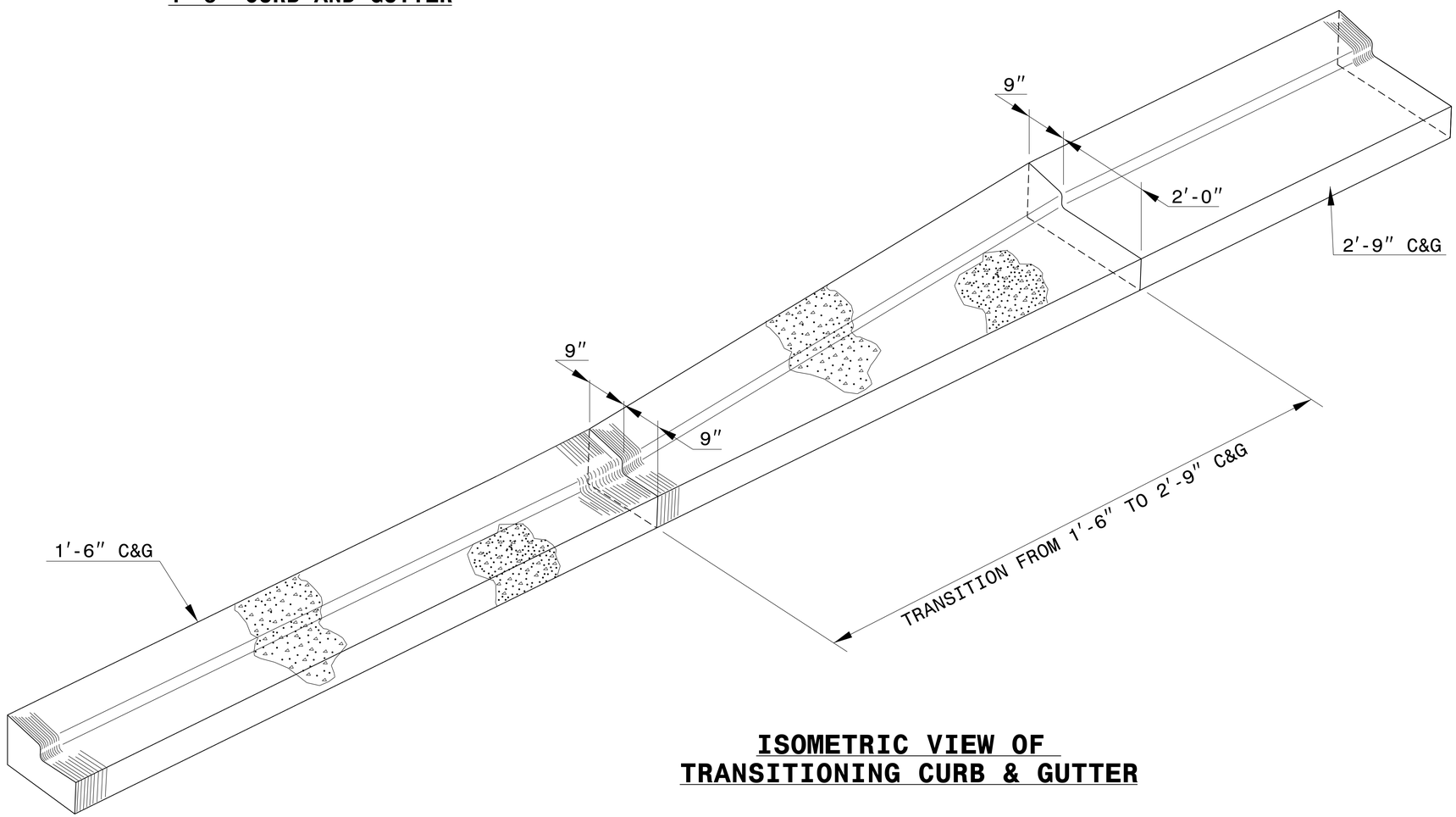

ISOMETRIC VIEW OF TRANSITIONING CURB & GUTTER

8/11/2015

NORTH CAROLINA PROFESSIONAL SEAL 022966 ENGINEER Joel S. Howerton

DocuSigned by: Joel Howerton 873F3D17DCDC45F...

CONTRACT STANDARDS AND DEVELOPMENT UNIT
Office 919-707-6950 FAX 919-250-4119

DETAIL OF 1'-6" TO 2'-9" CURB & GUTTER TRANSITION SECTION

ORIGINAL BY: T.S.SPELL DATE: NOV. 26, 2001
MODIFIED BY: T.S.SPELL DATE: JAN. 23, 2007
CHECKED BY: DATE:
FILE SPEC.: DS174:/usr/details/stand/cgtransit.dgn

PROJECT REFERENCE NO.	SHEET NO.
R-2603	2C-4

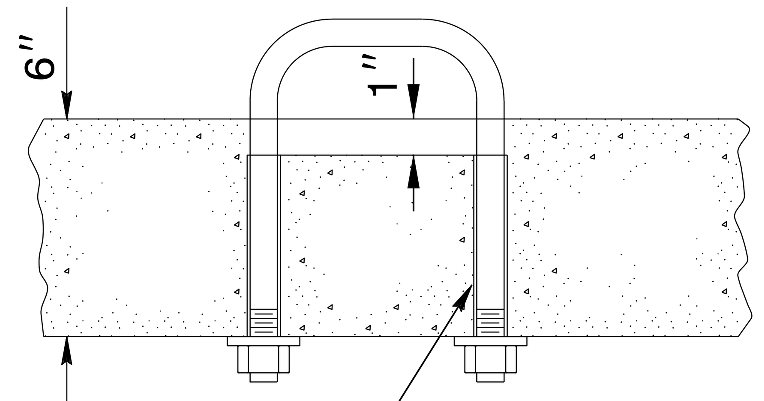

PARTIAL SECTION

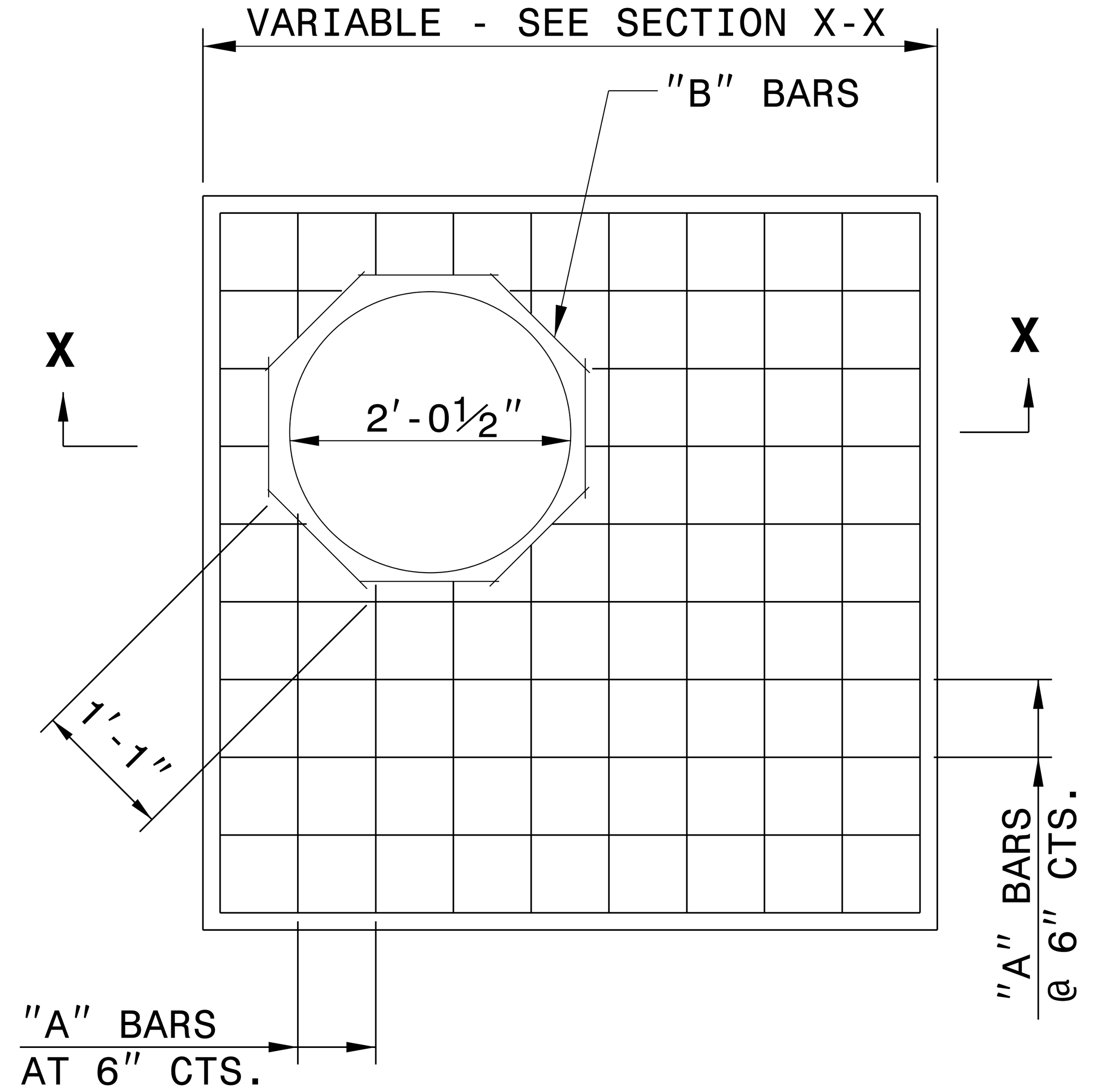

PLAN

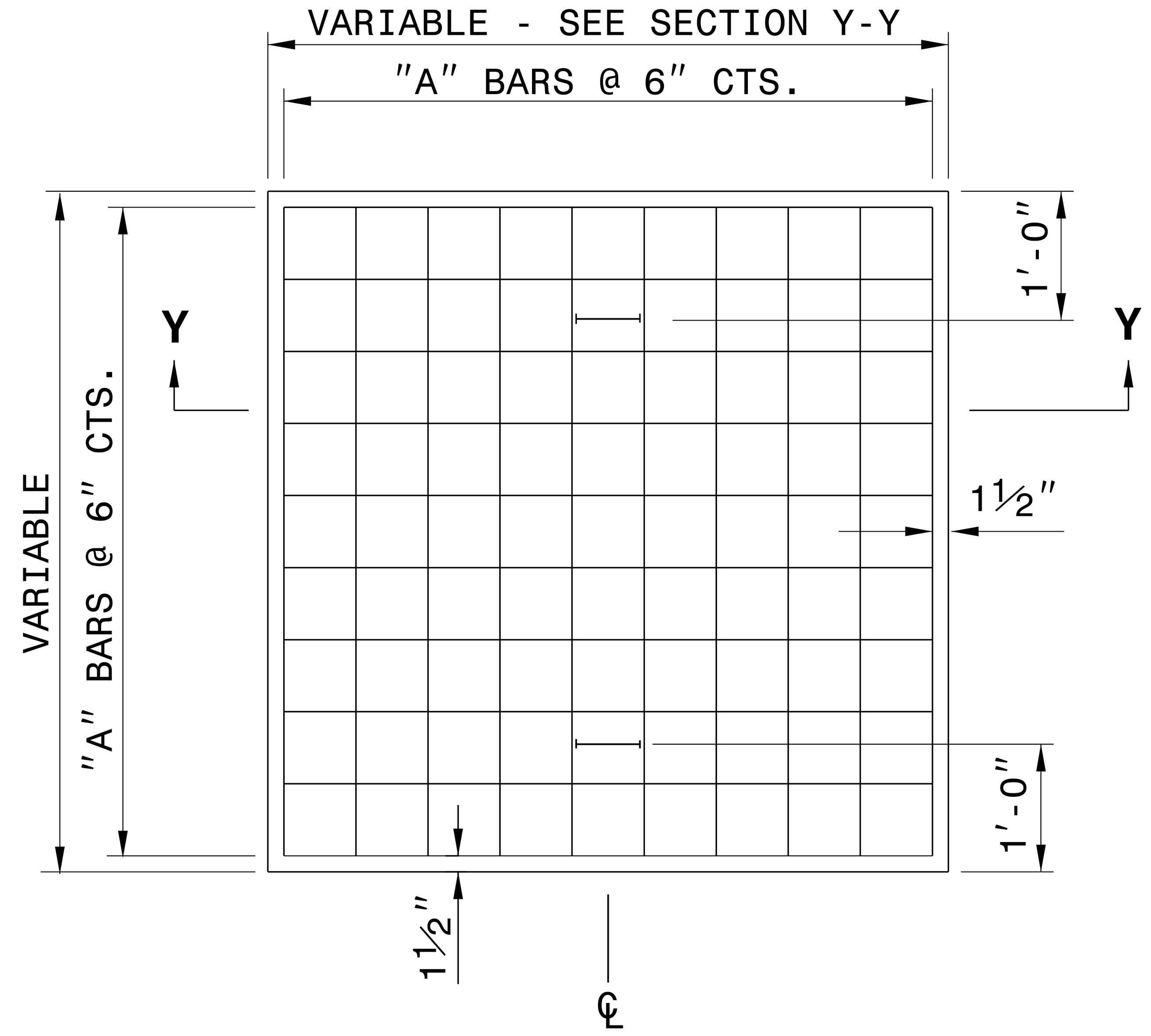

PLAN

GENERAL NOTES:

CONSTRUCT IN ACCORDANCE WITH SECTION 859 OF THE STANDARD SPECIFICATIONS.

THE DIMENSIONS FOR THE EXISTING BOXES ARE APPROXIMATE AND MAY VARY SLIGHTLY.

DETAIL INTENDED FOR NON-TRAFFIC BEARING DRAINAGE STRUCTURES.

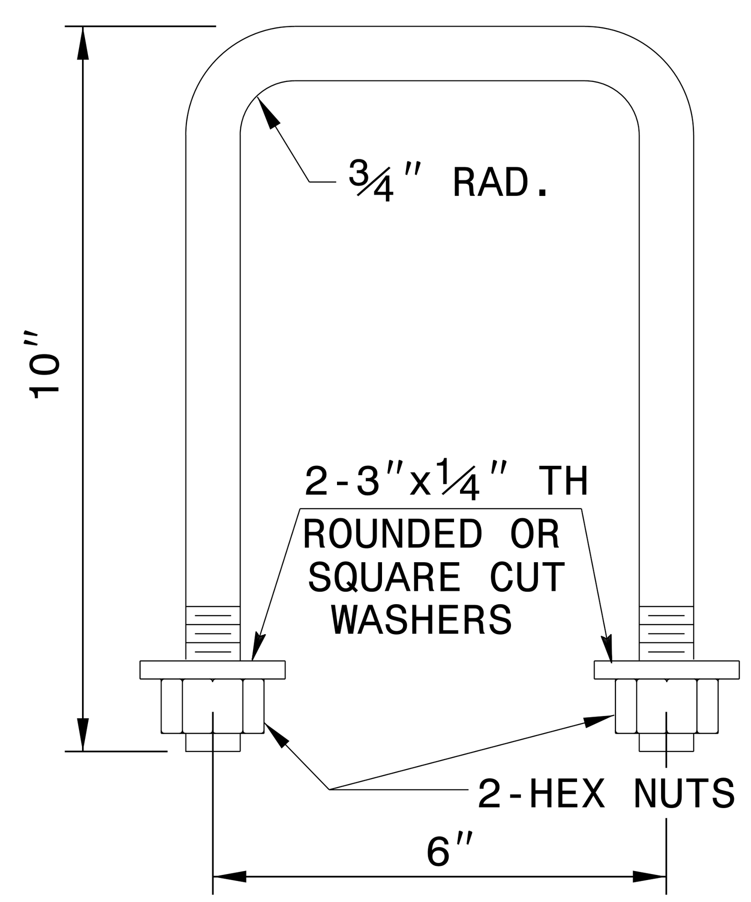

DETAIL OF HANDLE

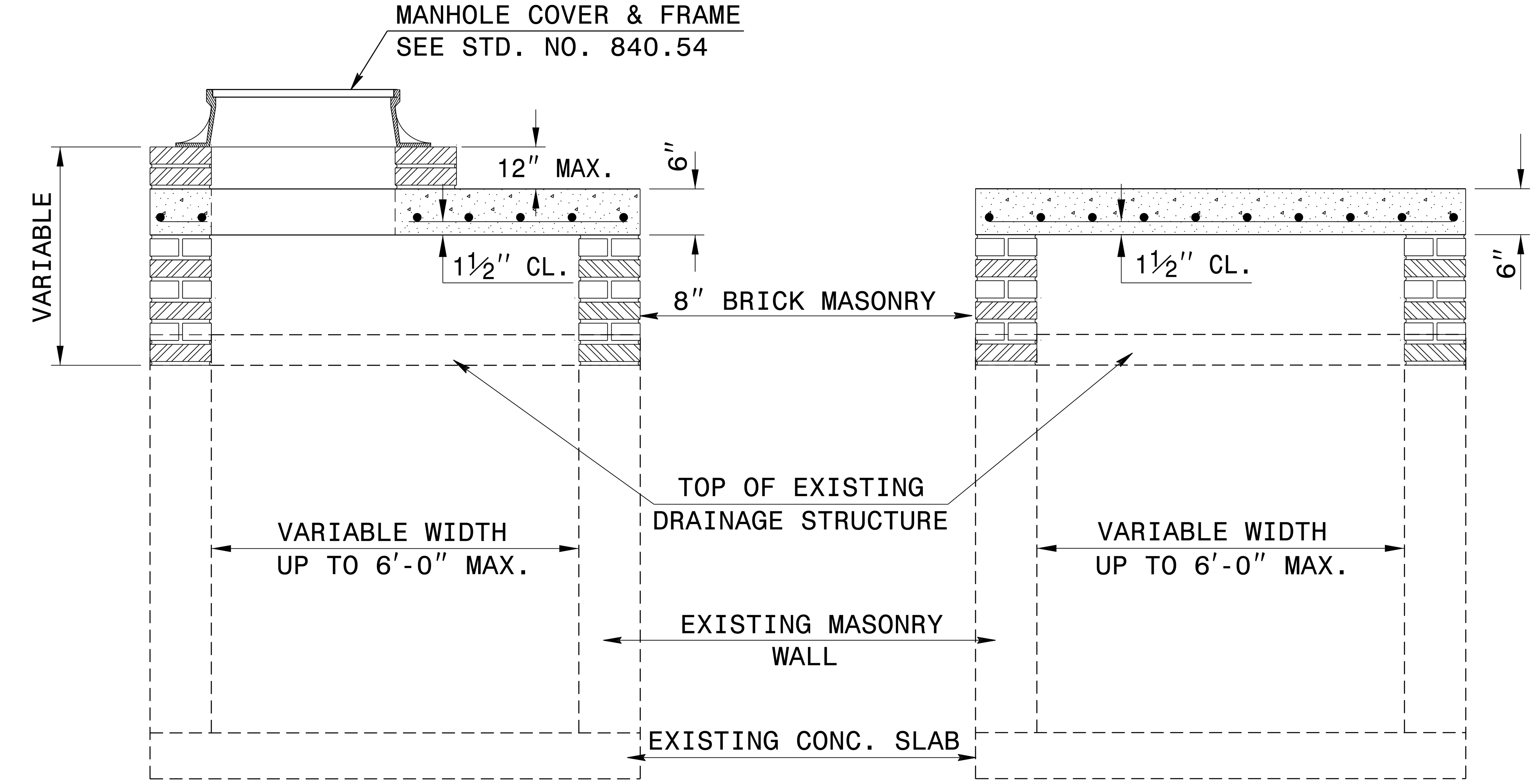

SECTION X-X **SECTION Y-Y**

BILL OF MATERIALS

REINFORCING STEEL				
CODE	SIZE	QTY.	LENGTH	REINF. STEEL LBS.
A	#4	20	4′-6″	60.12
B	#4	8	1′-1″	5.79
TOTAL				65.91 *

MASONRY	CU YDS
TOP SLAB CONCRETE CLASS "B"	.4326 *
BRICK MASONRY PER FT HT (MIN)	.4111

* NOTE:
QUANTITIES BASED ON 3′-6″ X 3′-6″ DRAINAGE STRUCTURE. ADJUST QUANTITIES FOR LARGER STRUCTURES AND MANHOLE CONSTRUCTION.

8/11/2015

NORTH CAROLINA PROFESSIONAL SEAL 022966 ENGINEER Joel S. Howerton

DocuSigned by: Joel Howerton 873F3D17DCDC45F...

CONTRACT STANDARDS AND DEVELOPMENT UNIT
Office 919-707-6950 FAX 919-250-4119

DETAIL TO CONVERT EXISTING DI, CB, OTCB or GI TO JUNCTION BOX (MANHOLE OPTIONAL)

ORIGINAL BY: T.S.S. DATE: NOV.1997
MODIFIED BY: T.S.S. DATE: FEB.2000
CHECKED BY: DATE:
FILE SPEC.: ds174:/usr/details/stand/boxtojbe.dgn

$$$$$$SYSTIME$$$$$
$$$$$$$$$$DGN$$$$$$$$$$$$$$$$
$$$$USERNAME$$$$

PROJECT REFERENCE NO.	SHEET NO.
R-2603	2C-5

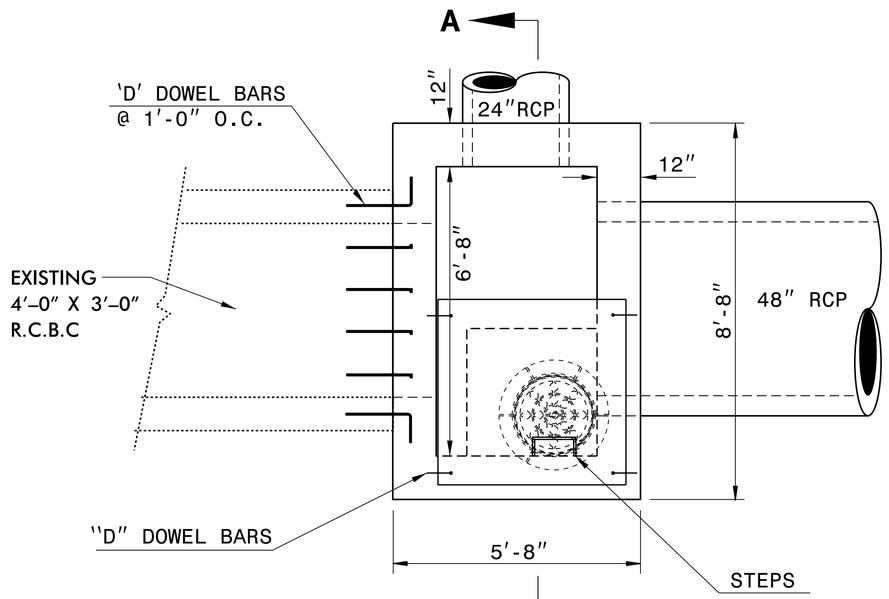

PLAN VIEW

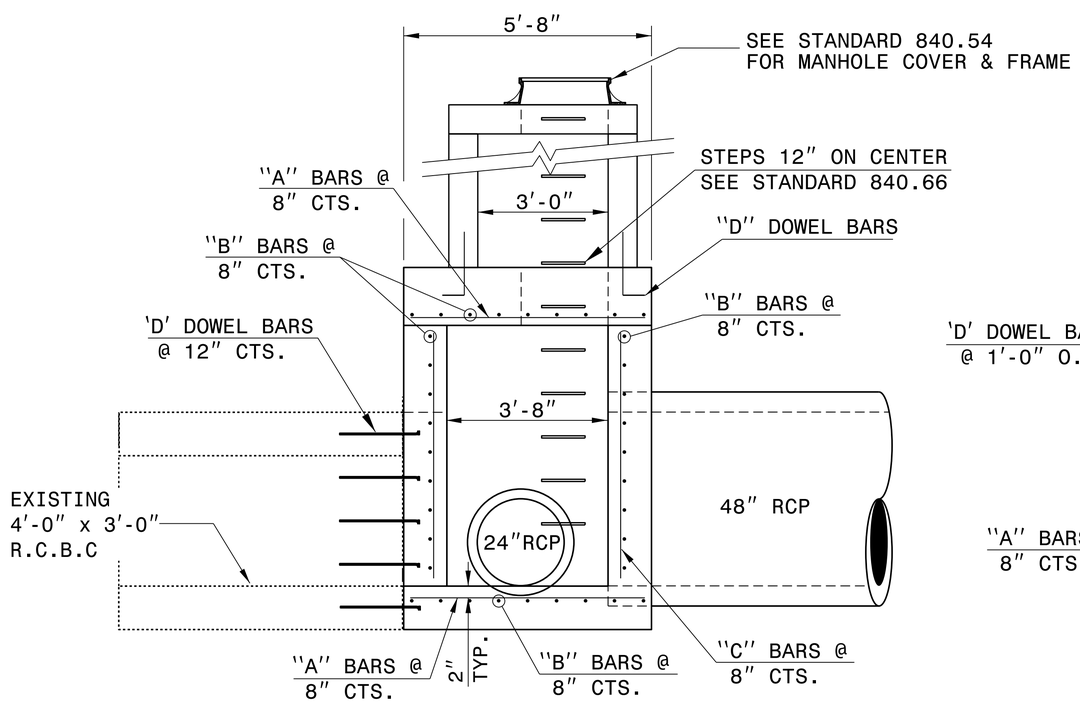

ELEVATION

GENERAL NOTES:

-CONSTRUCT THE JUNCTION BOX WITH CLASS "B" OR BETTER CONCRETE.

-CHAMFER ALL EXPOSED CORNERS 1".

-DOWEL 'D' BARS SHALL BE IMBEDDED 1'-0" MINIMUM INTO THE CULVERT WALLS, TOP AND BOTTOM SLABS. DOWELS SHALL BE CHEMICALLY ANCHORED IN ACCORDANCE WITH STRUCTURE SPECIAL PROVISION "ADHESIVELY ANCHORED ANCHOR BOLTS OR DOWELS". DOWEL 'D' BARS SHALL BE ROTATED TO VARIOUS ANGLES WHEN BEING ANCHORED TO OBTAIN GOOD ATTACHMENT BETWEEN THE CULVERT AND COLLAR.

-ALL DIMENSIONS SHOULD BE FIELD VERIFIED.

-CONSTRUCT CONCRETE BOX IN ACCORDANCE WITH SECTION 825 OF THE STANDARD SPECIFICATIONS.

-ADJUST LENGTH OF STEEL BARS AS NEEDED TO COMPENSATE FOR PIPES AND MANHOLE OPENINGS.

-REINFORCING STEEL SHALL CONFORM TO AASHTO M31 FOR GRADE 60.

-CUT OR BEND STEEL BARS AS NEEDED TO PROVIDE 2" CLEARANCE.

-PLACE STEPS 12" ON CENTERS IN ACCORDANCE WITH STD. 840.66.

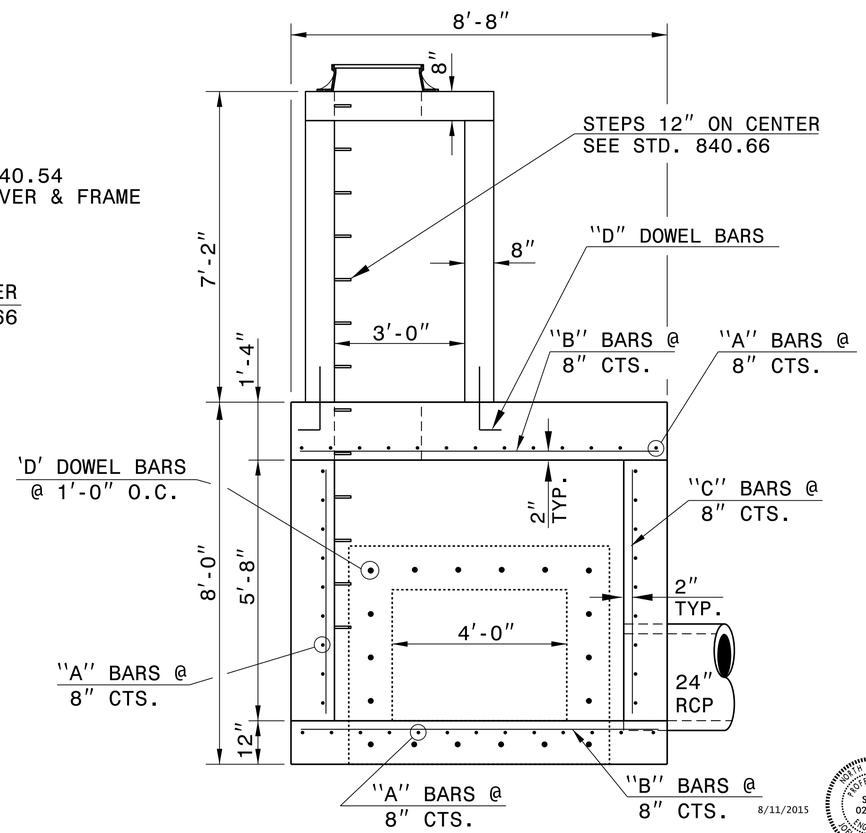

SECTION A-A

8/11/2015

BILL OF MATERIAL				
BAR	NO.	SIZE	LENGTH	WEIGHT
A	48	#5	5'-4"	267
B	45	#5	8'-4"	391
C	33	#5	6'-3"	215
D	24	#5	2'-6"	63
TOTAL REINF. STEEL (LBS.)				918
CLASS "B" CONC.(C.Y.)				12.2

* NO DEDUCTIONS MADE FOR 4'X 3' RCBC OR 48" RCP.

CONCRETE DEDUCTION

4'X 3' RCBC = 0.4 CU.YDS.

48" RCP = 0.7 CU.YDS.

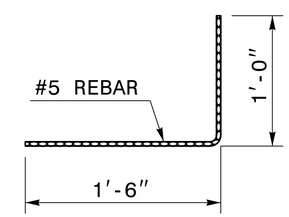

DOWEL 'D'

STR.#0903

CONTRACT STANDARDS AND DEVELOPMENT UNIT
Office 919-707-6950 FAX 919-250-4119

DETAIL OF JUNCTION BOX CONNECTING EXISTING 4'x 3' RCBC TO 48"RCP W/MANHOLE

ORIGINAL BY: T.Spell DATE: 1-16-03
MODIFIED BY: K.Kempf DATE: 6-2-15
CHECKED BY: DATE:
FILE SPEC.: s:kkempf/english/R2603jb_cb_tbjb.dgn

DocuSigned by: Joel Howerton 873F3D17DCDC45F...

05-JUN-2015 12:29
s:\contracts\Special Details\kkempf\english\R2603jb_cb_tbjb.dgn
$$$$USERNAME$$$$

PROJECT REFERENCE NO.	SHEET NO.
R-2603	2C-6

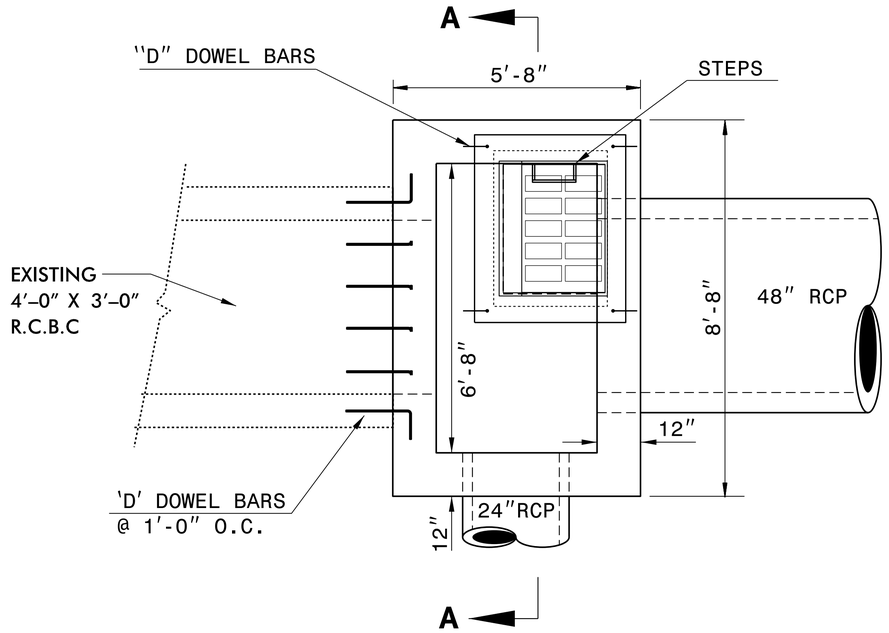

PLAN VIEW

GENERAL NOTES:

-CONSTRUCT THE JUNCTION BOX WITH CLASS "B" OR BETTER CONCRETE.

-CHAMFER ALL EXPOSED CORNERS 1".

-DOWEL 'D' BARS SHALL BE IMBEDDED 1'-0" MINIMUM INTO THE CULVERT WALLS, TOP AND BOTTOM SLABS. DOWELS SHALL BE CHEMICALLY ANCHORED IN ACCORDANCE WITH STRUCTURE SPECIAL PROVISION "ADHESIVELY ANCHORED ANCHOR BOLTS OR DOWELS". DOWEL 'D' BARS SHALL BE ROTATED TO VARIOUS ANGLES WHEN BEING ANCHORED TO OBTAIN GOOD ATTACHMENT BETWEEN THE CULVERT AND COLLAR.

-ALL DIMENSIONS SHOULD BE FIELD VERIFIED.

-CONSTRUCT CONCRETE BOX IN ACCORDANCE WITH SECTION 825 OF THE STANDARD SPECIFICATIONS.

-ADJUST LENGTH OF STEEL BARS AS NEEDED TO COMPENSATE FOR PIPES AND MANHOLE OPENINGS.

-REINFORCING STEEL SHALL CONFORM TO AASHTO M31 FOR GRADE 60.

-CUT OR BEND STEEL BARS AS NEEDED TO PROVIDE 2" CLEARANCE.

-PLACE STEPS 12" ON CENTERS IN ACCORDANCE WITH STD. 840.66.

BILL OF MATERIAL

BAR	NO.	SIZE	LENGTH	WEIGHT
A	48	#5	5'-4"	267
B	45	#5	8'-4"	391
C	33	#5	6'-3"	215
D	24	#5	2'-6"	63
TOTAL REINF. STEEL (LBS.)				918
CLASS "B" CONC.(C.Y.)				9.4

* NO DEDUCTIONS MADE FOR 4'X 3' RCBC OR 48" RCP.

CONCRETE DEDUCTION
4'X 3' RCBC = 0.4 CU.YDS.
48" RCP = 0.7 CU.YDS.

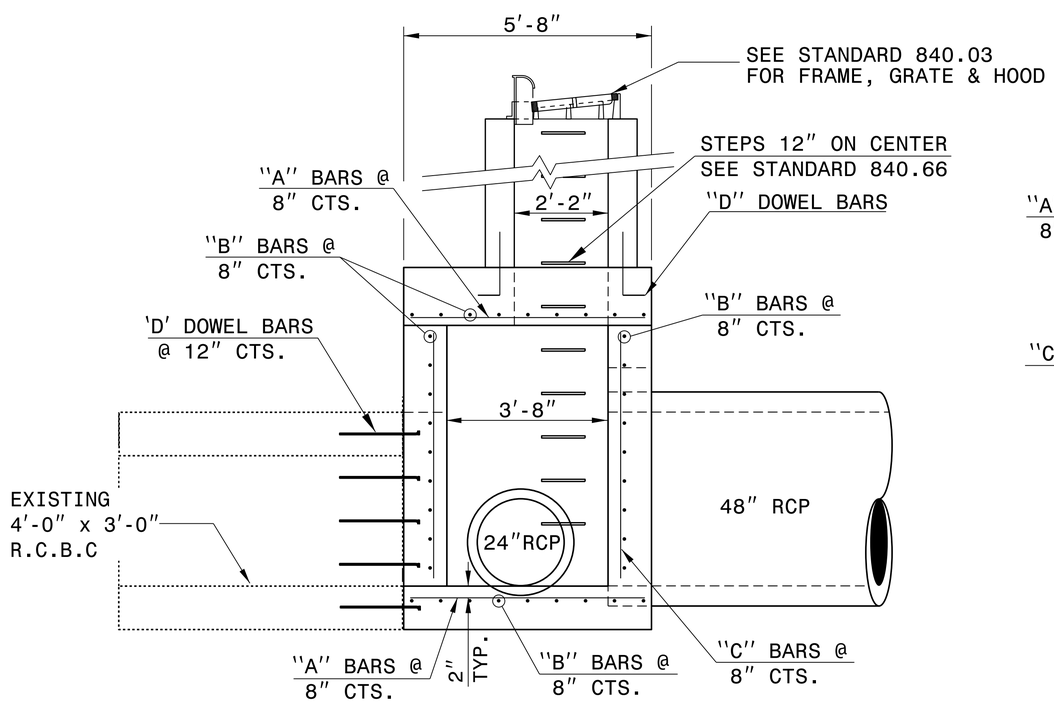

ELEVATION

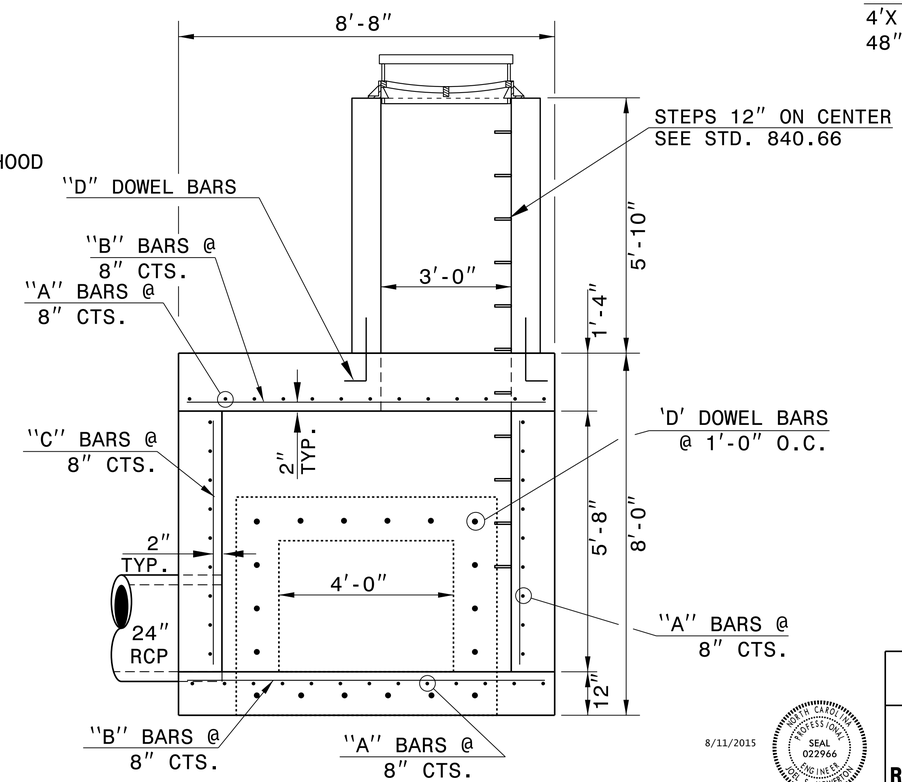

SECTION A-A

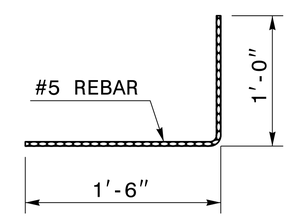

DOWEL 'D'

STR.#0914

8/11/2015

NORTH CAROLINA PROFESSIONAL SEAL 022966 ENGINEER JOEL S. HOWERTON

DocuSigned by: Joel Howerton 873F3D17DCDC45F...

CONTRACT STANDARDS AND DEVELOPMENT UNIT
Office 919-707-6950 FAX 919-250-4119

DETAIL OF JUNCTION BOX CONNECTING EXISTING 4'x 3' RCBC TO 48"RCP W/CATCH BASIN

ORIGINAL BY:	T.Spell	DATE:	1-16-03
MODIFIED BY:	K.Kempf	DATE:	6-2-15
CHECKED BY:		DATE:	
FILE SPEC.:	s:kkempf/english/R2603jb_cb_tbjb.dgn		

05-JUN-2015 12:33
S:\Contracts\Special Details\kkempf\english\R2603jb_cb_tbjb.dgn
$$$$USERNAME$$$$

STATE OF
NORTH CAROLINA
DEPT. OF TRANSPORTATION
DIVISION OF HIGHWAYS
RALEIGH, N.C.

ENGLISH DETAIL DRAWING FOR

CONCRETE ENDWALL FOR SINGLE 48″ R.C. PIPE AND 18″ R.C. PIPE

SHEET 1 OF 1

838D01

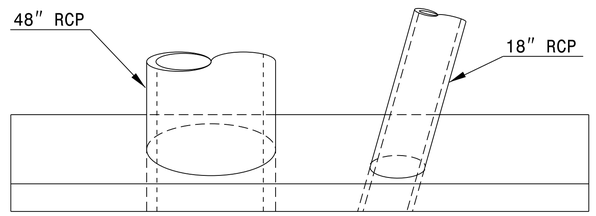

PLAN

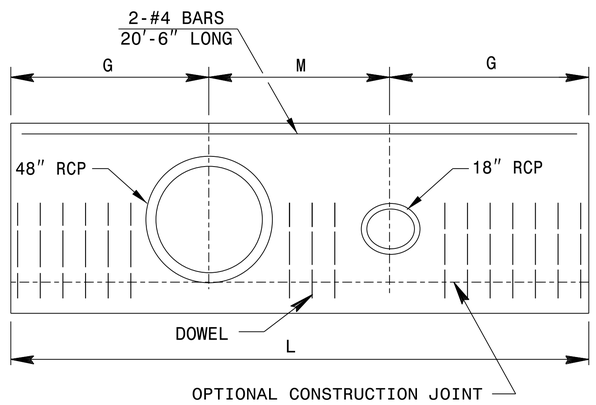

ELEVATION

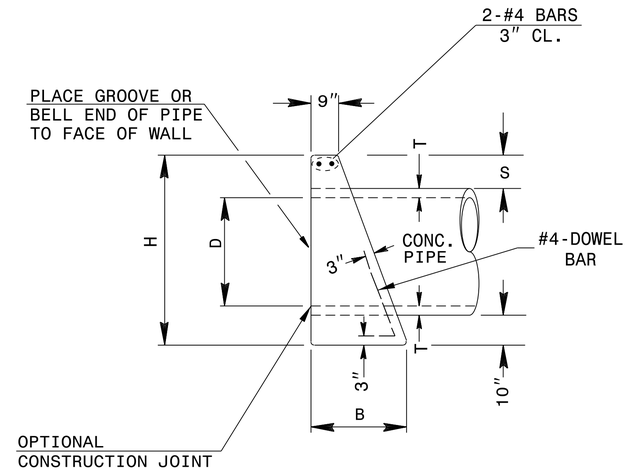

END ELEVATION

* 18″ RCP NOT SHOWN FOR CLARITY

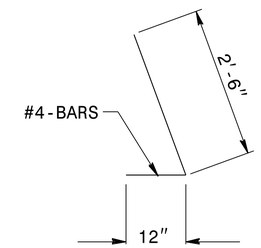

DOWEL

DIMENSIONS AND CONCRETE QUANTITIES									
USING CONCRETE PIPE									
	COMMON DIMENSIONS					DOUBLE PIPE			
D	H	B	G	T	S	M	L	YD^3	REINF. STEEL
48″	6′-9″	3′-5″	7′-2″	5¾″	11½″	6′-8″	21′-0″	8.0	60.0

GENERAL NOTES:

CONSTRUCT ENDWALL IN ACCORDANCE WITH SECTION 838 OF THE STANDARD SPECIFICATIONS AND THIS DETAIL.

FORMS ARE TO BE USED FOR THE CONSTRUCTION OF THE BASE.

WHEN THE CONTRACTOR ELECTS TO USE A CONSTRUCTION JOINT AT THE BOTTOM OF THE PIPE, DOWELS SHALL BE PLACED IN THE BASE AS SHOWN ON PLANS. SPACING OF BARS IS TO BE APPROXIMATELY 12″ CENTERS UNLESS OTHERWISE DIRECTED BY THE ENGINEER.

CLASS "B" CONCRETE SHALL BE USED.

MITRE HEADWALL FOR 24″ C.M. PIPE AS SHOWN IN STANDARD DRAWING 838.01.

STATE OF
NORTH CAROLINA
DEPT. OF TRANSPORTATION
DIVISION OF HIGHWAYS
RALEIGH, N.C.

ENGLISH DETAIL DRAWING FOR

CONCRETE ENDWALL FOR SINGLE 48″ R.C. PIPE AND 18″ R.C. PIPE

SHEET 1 OF 1

838D01

STR.#0916 & #0917

8/11/2015

NORTH CAROLINA PROFESSIONAL SEAL 022966 ENGINEER JOEL S. HOWERTON

DocuSigned by: Joel Howerton
873F3D17DCDC45F...

CONTRACT STANDARDS AND DEVELOPMENT UNIT
Office 919-707-6950 FAX 919-250-4119

SEE PLATE FOR TITLE

ORIGINAL BY: _____ DATE: _____
MODIFIED BY: KKEMPF DATE: JUNE 2015
CHECKED BY: _____ DATE: _____
FILE SPEC.: details/kkempf/english/R2603_838d01.dgn

05-JUN-2015 12:22
S:\Contracts\Contracts\Special Details\kkempf\english\R2603_838d01.dgn
$$$$USERNAME$$$$

PROJECT REFERENCE NO.	SHEET NO.
R-2603	2C-8

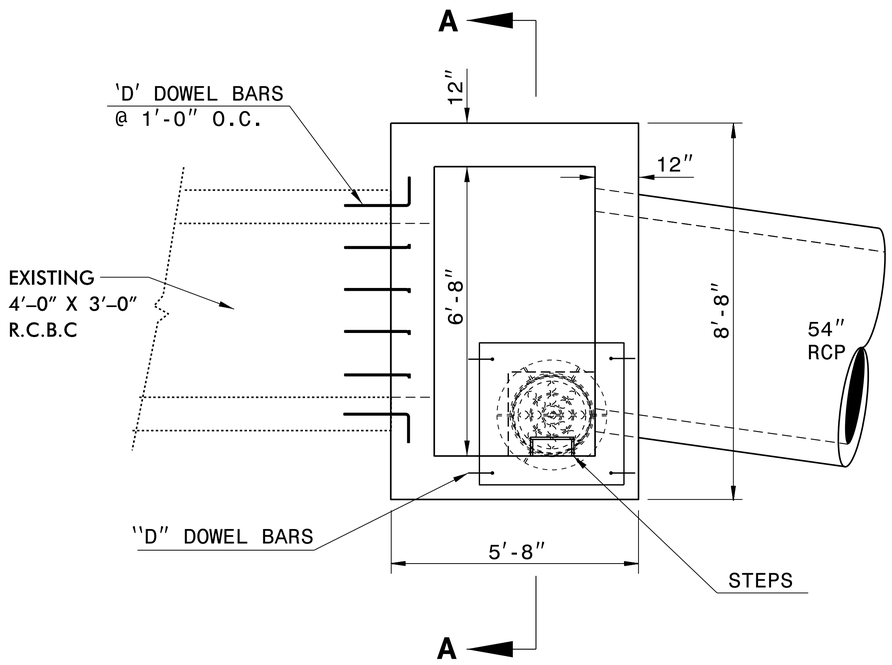

PLAN VIEW

GENERAL NOTES:

-CONSTRUCT THE JUNCTION BOX WITH CLASS "B" OR BETTER CONCRETE.

-CHAMFER ALL EXPOSED CORNERS 1".

-DOWEL 'D' BARS SHALL BE IMBEDDED 1'-0" MINIMUM INTO THE CULVERT WALLS, TOP AND BOTTOM SLABS. DOWELS SHALL BE CHEMICALLY ANCHORED IN ACCORDANCE WITH STRUCTURE SPECIAL PROVISION "ADHESIVELY ANCHORED ANCHOR BOLTS OR DOWELS". DOWEL 'D' BARS SHALL BE ROTATED TO VARIOUS ANGLES WHEN BEING ANCHORED TO OBTAIN GOOD ATTACHMENT BETWEEN THE CULVERT AND COLLAR.

-ALL DIMENSIONS SHOULD BE FIELD VERIFIED.

-CONSTRUCT CONCRETE BOX IN ACCORDANCE WITH SECTION 825 OF THE STANDARD SPECIFICATIONS.

-ADJUST LENGTH OF STEEL BARS AS NEEDED TO COMPENSATE FOR PIPES AND MANHOLE OPENINGS.

-REINFORCING STEEL SHALL CONFORM TO AASHTO M31 FOR GRADE 60.

-CUT OR BEND STEEL BARS AS NEEDED TO PROVIDE 2" CLEARANCE.

-PLACE STEPS 12" ON CENTERS IN ACCORDANCE WITH STD. 840.66.

BILL OF MATERIAL

BAR	NO.	SIZE	LENGTH	WEIGHT
A	57	#5	5'-4"	317
B	45	#5	8'-4"	391
C	40	#5	5'-4"	223
D	24	#5	2'-6"	63
TOTAL REINF. STEEL (LBS.)				944
CLASS "B" CONC.(C.Y.)				9.4

* NO DEDUCTIONS MADE FOR 4'X 3' RCBC OR 54" RCP.

CONCRETE DEDUCTION
4'X 3' RCBC = 0.4 CU.YDS.
54" RCP = 0.9 CU.YDS.

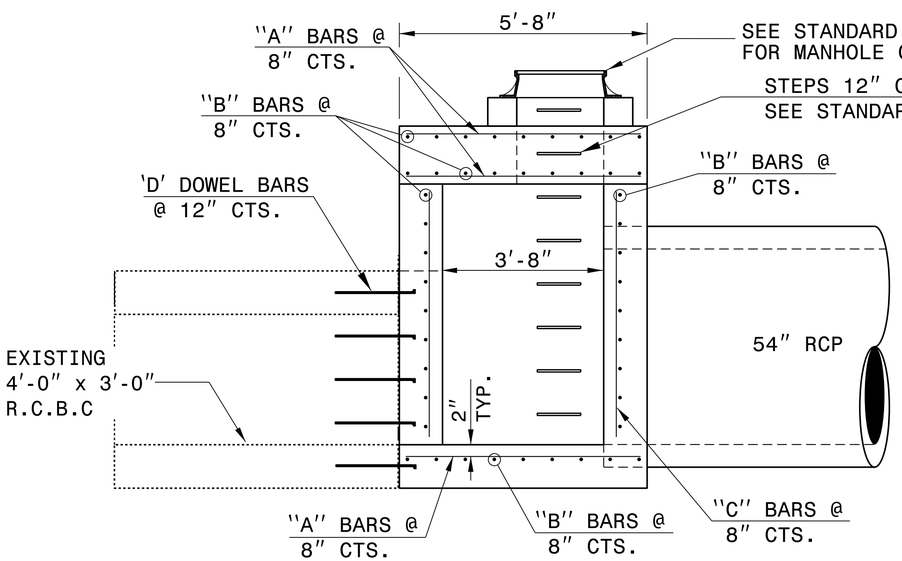

ELEVATION

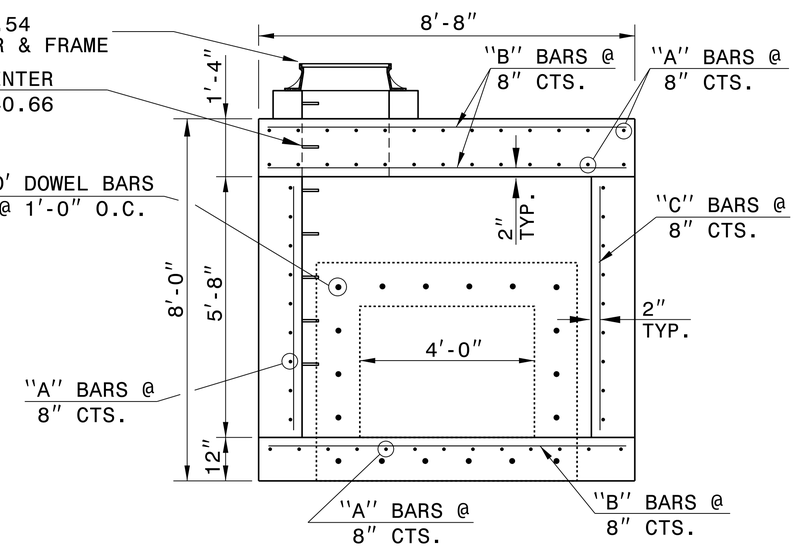

SECTION A-A

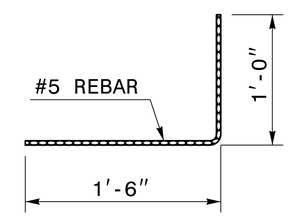

DOWEL 'D'

STR.#1422

8/11/2015

NORTH CAROLINA PROFESSIONAL SEAL 022966 ENGINEER JOEL W. HOWERTON

DocuSigned by: Joel Howerton 873F3D17DCDC45F...

CONTRACT STANDARDS AND DEVELOPMENT UNIT
Office 919-707-6950 FAX 919-250-4119

DETAIL OF TRAFFIC BEARING JUNCTION BOX CONNECTING EXISTING 4'x 3' RCBC TO 54"RCP

ORIGINAL BY: T.Spell DATE: 1-16-03
MODIFIED BY: K.Kempf DATE: 6-2-15
CHECKED BY: DATE:
FILE SPEC.: s:kkempf/english/R2603jb_cb_tbjb.dgn

05-JUN-2015 12:33
S:\Contracts\Contracts\Special Details\kkempf\english\R2603jb_cb_tbjb.dgn
$$$$USERNAME$$$$

PROJECT REFERENCE NO.	SHEET NO.
R-2603	2C-9

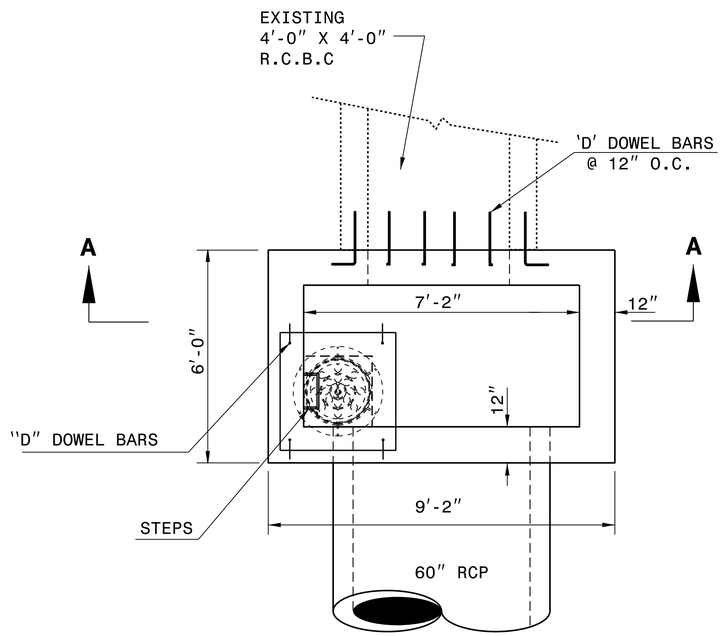

PLAN VIEW

GENERAL NOTES:

-CONSTRUCT THE JUNCTION BOX WITH CLASS "B" OR BETTER CONCRETE.

-CHAMFER ALL EXPOSED CORNERS 1".

-DOWEL 'D' BARS SHALL BE IMBEDDED 1'-0" MINIMUM INTO THE CULVERT WALLS, TOP AND BOTTOM SLABS. DOWELS SHALL BE CHEMICALLY ANCHORED IN ACCORDANCE WITH STRUCTURE SPECIAL PROVISION "ADHESIVELY ANCHORED ANCHOR BOLTS OR DOWELS". DOWEL 'D' BARS SHALL BE ROTATED TO VARIOUS ANGLES WHEN BEING ANCHORED TO OBTAIN GOOD ATTACHMENT BETWEEN THE CULVERT AND COLLAR.

-ALL DIMENSIONS SHOULD BE FIELD VERIFIED.

-CONSTRUCT CONCRETE BOX IN ACCORDANCE WITH SECTION 825 OF THE STANDARD SPECIFICATIONS.

-ADJUST LENGTH OF STEEL BARS AS NEEDED TO COMPENSATE FOR PIPES AND MANHOLE OPENINGS.

-REINFORCING STEEL SHALL CONFORM TO AASHTO M31 FOR GRADE 60.

-CUT OR BEND STEEL BARS AS NEEDED TO PROVIDE 2" CLEARANCE.

-PLACE STEPS 12" ON CENTERS IN ACCORDANCE WITH STD. 840.66.

BILL OF MATERIAL

BAR	NO.	SIZE	LENGTH	WEIGHT
A	63	#5	5'-8"	373
B	56	#5	8'-10"	415
C	42	#5	6'-2"	270
D	22	#5	2'-6"	57
E	64	#5	3'-4"	222
F	20	#5	10'-4"	215
TOTAL REINF. STEEL (LBS.)				1552
CLASS "B" CONC.(C.Y.)				15.3

* NO DEDUCTIONS MADE FOR 4'X 4' RCBC OR 60" RCP

CONCRETE DEDUCTION

4'X 4' RCBC = 0.6 CU.YDS.
60" RCP = 1.1 CU.YDS.

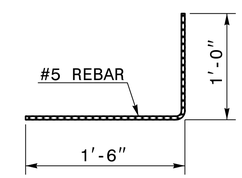

DOWEL 'D'

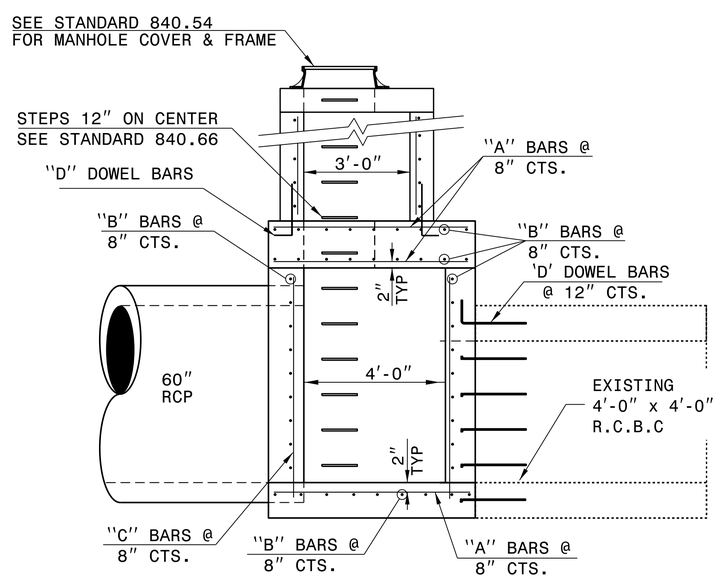

ELEVATION

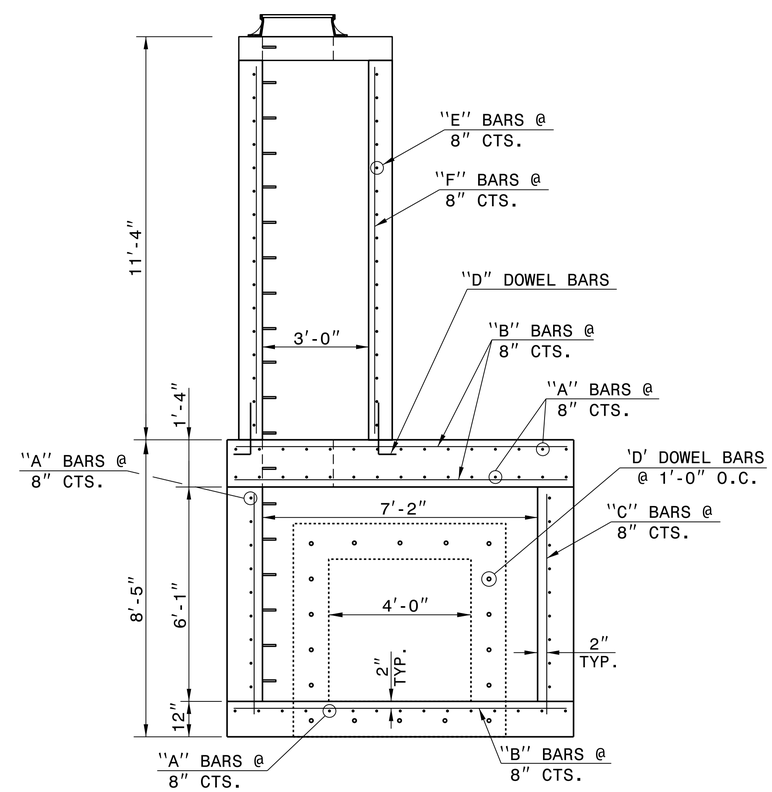

SECTION A-A

STR.#1627

CONTRACT STANDARDS AND DEVELOPMENT UNIT
Office 919-707-6950 FAX 919-250-4119

DETAIL OF TRAFFIC BEARING JUNCTION BOX CONNECTING EXISTING 4' x 4' RCBC TO 60"RCP

8/11/2015

NORTH CAROLINA PROFESSIONAL SEAL 022966 ENGINEER JOEL S. HOWERTON

DocuSigned by: Joel Howerton 873F3D17DCDC45F...

ORIGINAL BY:	T.Spell	DATE:	9-8-08
MODIFIED BY:	K.Kempf	DATE:	5-27-15
CHECKED BY:		DATE:	
FILE SPEC.:	s:kkempf/english/R2603jb_cb_tbjb.dgn		

05-JUN-2015 12:35
S:\Contracts\Special Details\kkempf\english\R2603jb_cb_tbjb.dgn
$$$$USERNAME$$$$

PROJECT REFERENCE NO.	SHEET NO.
R-2603	2C-10

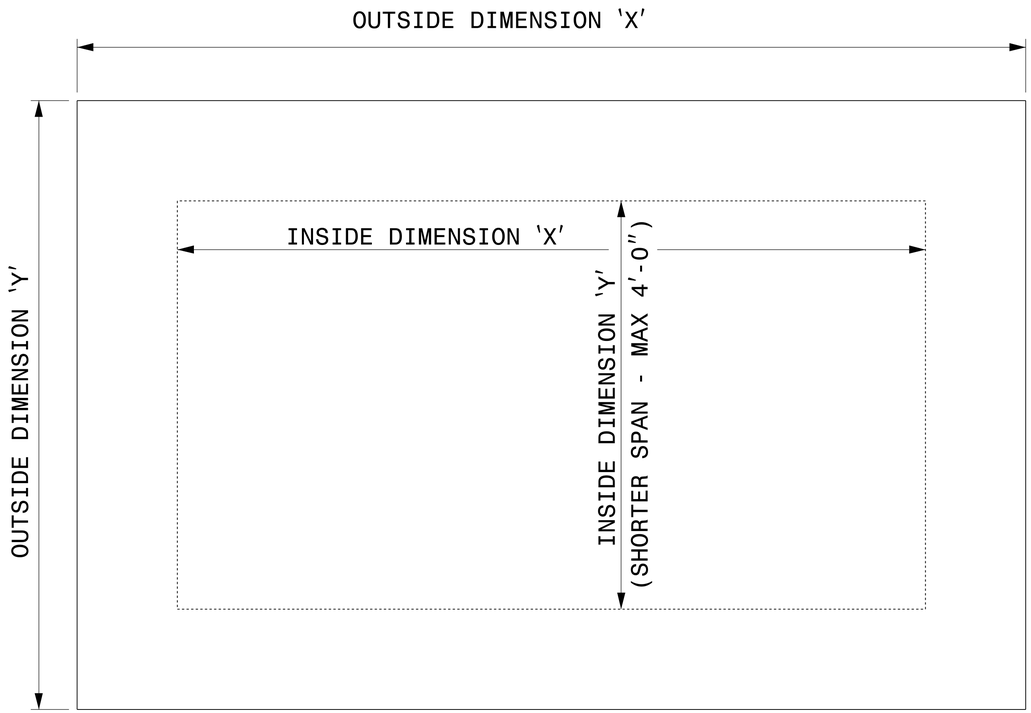

PLAN VIEWS

GENERAL NOTES:

-USE GRADE A36 STEEL
-STEEL COVERS ARE FOR TEMPORARY USE DURING PHASE CONSTRUCTION.
-FILL SHALL BE PLACED DIRECTLY OVER THE STEEL PLATES.
-SEE ROADWAY PLANS AND PROVISIONS FOR LOCATIONS
-QUANTITES TO BE PAID FOR AT THE UNIT PRICE BID PER EACH.

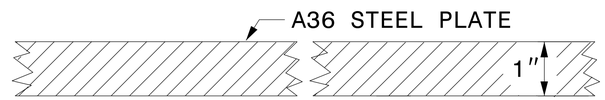

SECTION VIEW OF STEEL TOP PLATE

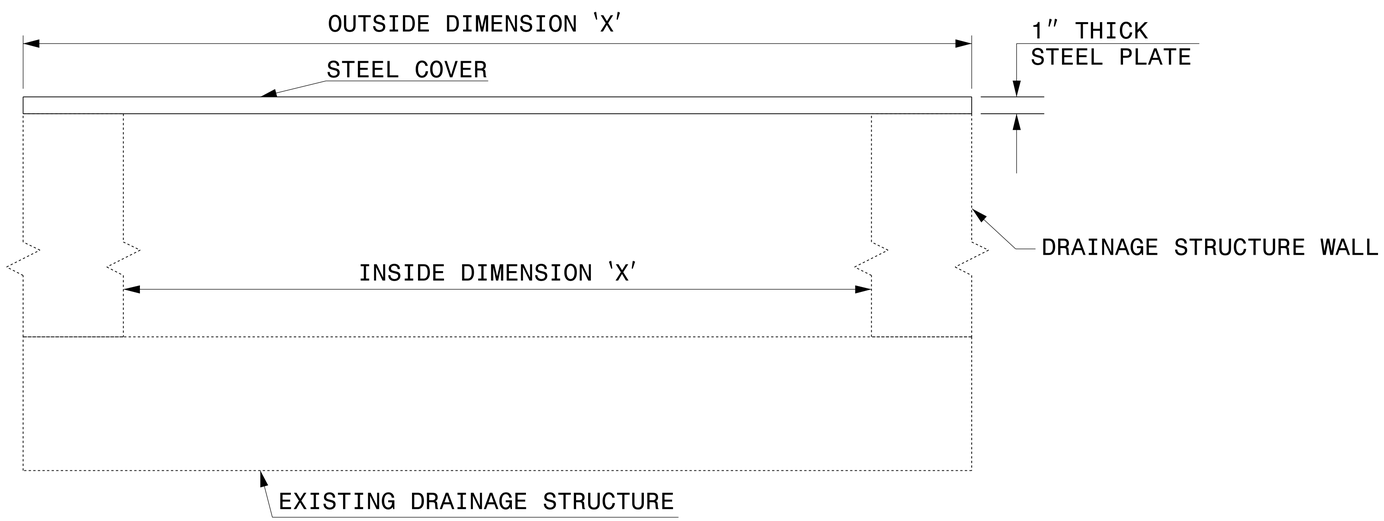

ELEVATION VIEWS

8/11/2015

NORTH CAROLINA PROFESSIONAL SEAL 022966 ENGINEER Joel S. Howerton

DocuSigned by: Joel Howerton B73F3D17DCDC45F...

CONTRACT STANDARDS
AND DEVELOPMENT UNIT
Office 919-707-6950 FAX 919-250-4119

DETAIL OF TEMPORARY 1" STEEL COVER OVER DRAINAGE STRUCTURE

ORIGINAL BY: E.E. WARD DATE: 2-2-98
MODIFIED BY: DATE:
CHECKED BY: DATE:
FILE SPEC.: eric:/usr/details/metric/stand/stlcvr2.dgn

$$$$SYSTIME$$$$
$$$$DGNFILE$$$$
$$$$USERNAME$$$$

PROJECT REFERENCE NO.	SHEET NO.
R-2603	2C-11

STATE OF NORTH CAROLINA DEPT. OF TRANSPORTATION DIVISION OF HIGHWAYS RALEIGH, N.C.

ENGLISH DETAIL DRAWING FOR
STRUCTURE ANCHOR UNITS
GUARDRAIL ANCHOR UNIT, TYPE III FOR ATTACHMENT TO RAIL ON BRIDGE - SUB REGIONAL TIER

SHEET 2 OF 7
862d03

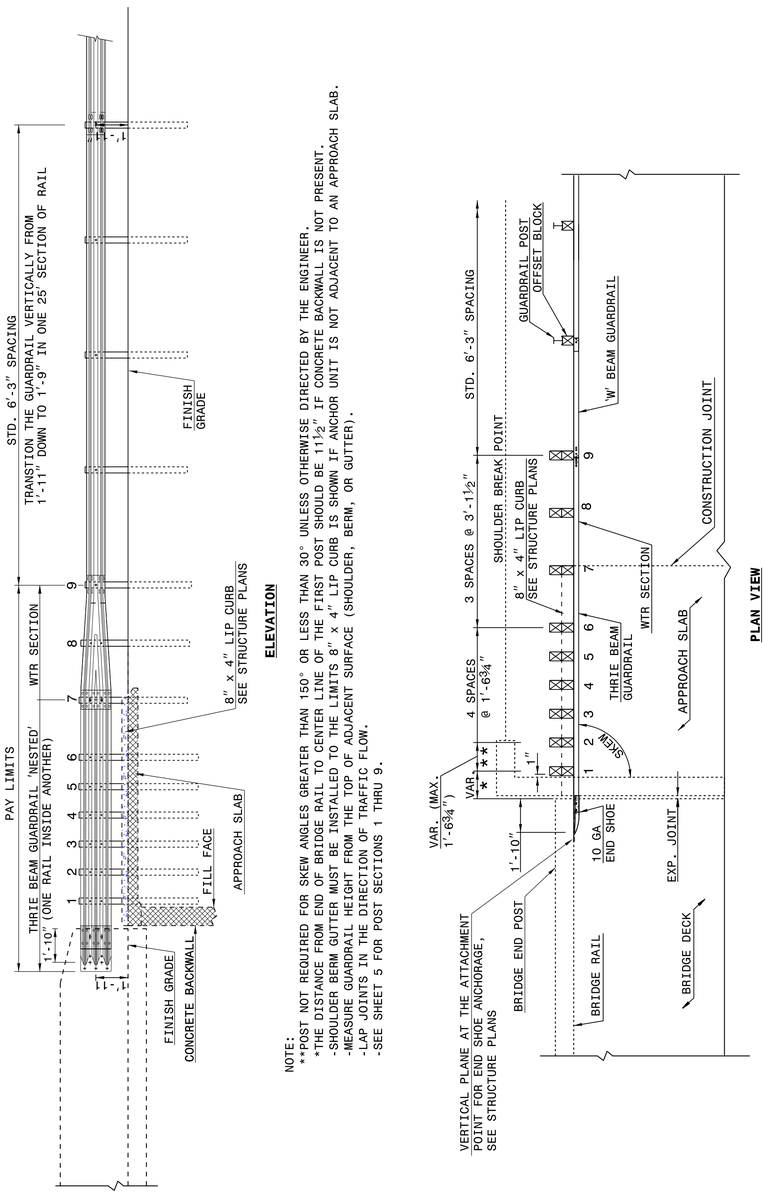

GUARDRAIL ANCHOR UNIT, TYPE III FOR ATTACHMENT TO RAIL ON BRIDGE - SUB REGIONAL TIER

STATE OF NORTH CAROLINA DEPT. OF TRANSPORTATION DIVISION OF HIGHWAYS RALEIGH, N.C.

ENGLISH DETAIL DRAWING FOR
STRUCTURE ANCHOR UNITS
GUARDRAIL ANCHOR UNIT, TYPE III

SHEET 3 OF 7
862d03

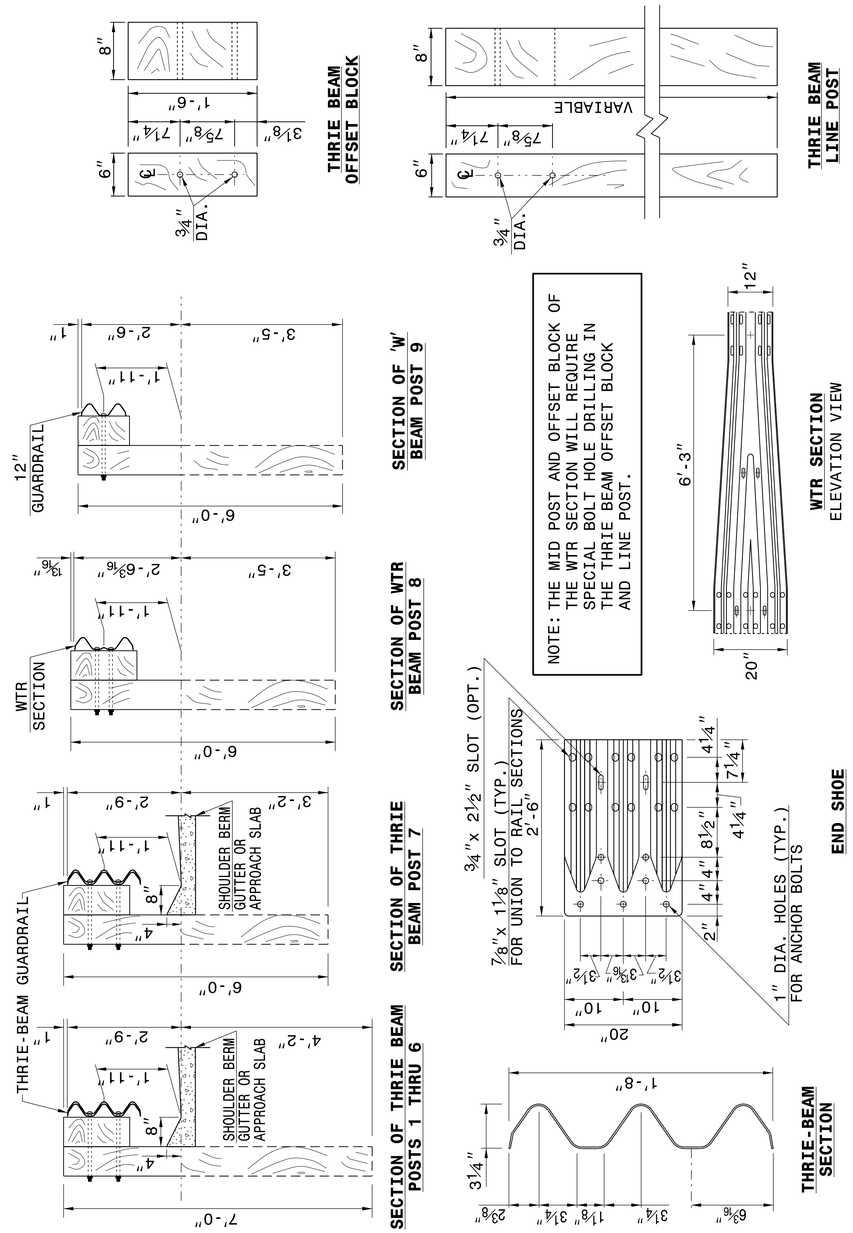

STATE OF NORTH CAROLINA DEPT. OF TRANSPORTATION DIVISION OF HIGHWAYS RALEIGH, N.C.

ENGLISH DETAIL DRAWING FOR
STRUCTURE ANCHOR UNITS
GUARDRAIL ANCHOR UNIT, TYPE III

SHEET 3 OF 7
862d03

8/11/2015

NORTH CAROLINA PROFESSIONAL SEAL 022966 ENGINEER Joel S. Howerton

DocuSigned by: Joel Howerton
B73F3D17DCDC45F...

CONTRACT STANDARDS AND DEVELOPMENT UNIT
Office 919-707-6950 FAX 919-250-4119

SEE TITLE BLOCK

ORIGINAL BY: J HOWERTON DATE: 06-22-12
MODIFIED BY: DATE:
CHECKED BY: DATE:
FILE SPEC.:

$$$$$$SYTME$$$$
$$$$$$SCREN$$$$ON$$$$$$$$$$$$$$$$
$$$$$$USERNAME$$$$

PROJECT REFERENCE NO.	SHEET NO.
R-2603	2C-12

STATE OF
NORTH CAROLINA
DEPT. OF TRANSPORTATION
DIVISION OF HIGHWAYS
RALEIGH, N.C.

ENGLISH DETAIL DRAWING FOR
GUARDRAIL ANCHOR UNIT
GUARDRAIL ANCHOR UNIT TYPE B-77
FOR F-SHAPE BARRIER

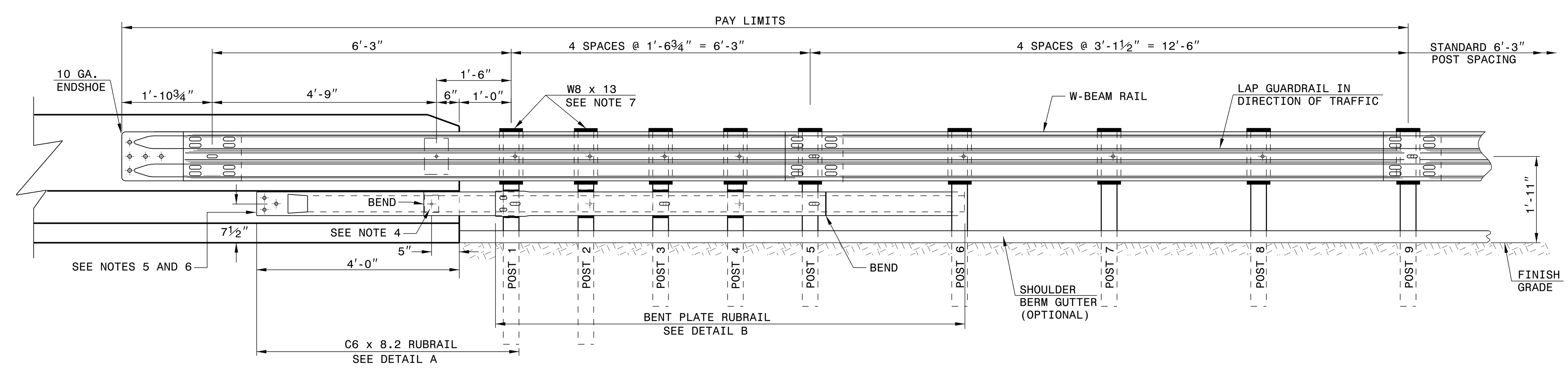

ELEVATION

GENERAL NOTES:
1) POSTS 1 THROUGH 5 REQUIRE AN ADDITIONAL HOLE TO ATTACH LOWER BLOCKOUTS AND/OR RUBRAIL.
2) RUBRAIL BLOCKOUTS LOCATED ON POSTS 1 THROUGH 4 ARE OFFSET DRILLED AND SECURED WITH ⅝" BUTTONHEAD BOLTS (SEE CHART FOR BOLT LENGTHS). SECURE BLOCKS ONLY TO POSTS 2 AND 4. SECURE RUBRAIL AND BLOCKOUTS TO POSTS 1 AND 3. RUBRAIL IS SECURED TO POST 5 WITH A ⅝" x 4½" BUTTONHEAD BOLT. RUBRAIL IS FLARED TO BACK OF POST 6 AND NOT SECURED.
3) STEEL SPACER TUBE IS A SCHEDULE 40 GALVANIZED PIPE 6" INSIDE DIAMETER x 9" LONG. ATTACH TUBE TO GUARDRAIL ONLY WITH ⅝" x 1¼" LONG BUTTONHEAD BOLT AND RECTANGULAR PLATE WASHER.
4) SEE DETAIL D FOR SLOPED RUBRAIL BLOCKOUT. BLOCKOUT IS ATTACHED TO RAIL ELEMENT ONLY. USE ⅜" x 3" LAG BOLT WITH FLAT WASHER.
5) SHOP FABRICATE THE C6 x 8.2 RUBRAIL END TO BE CONSISTENT WITH THE SLOPE OF THE F SHAPE AND ATTACH FLUSH WITH THE SLOPED TOE OF THE BARRIER OR BRIDGE RAIL.
6) ANCHORAGE:
   (a) AT EXISTING BRIDGE RAIL AND NEW OR EXISTING BARRIERS, ANCHOR RUBRAIL USING THREE ⅝" x 6" CHEMICALLY ANCHORED BOLTS WITH WASHERS. MAXIMUM PROJECTION FOR BOLTS IS ½".
   (b) AT EXISTING BRIDGE RAIL AND NEW OR EXISTING BARRIERS, ANCHOR THE W-BEAM END SHOE USING A 4 BOLT HOLD DOWN PLATE (SEE STD. DWG. 862.04). A 4 BOLT INSERT ASSEMBLY IS ALLOWED ON PRECAST REINFORCED CONCRETE BARRIER (SEE STD. DWG. 857.01). INSTALL THE W-BEAM END SHOE BEHIND THE NESTED W-BEAM ELEMENTS.
   (c) AT NEW BRIDGE RAIL, ANCHOR THE W-BEAM END SHOE AND RUBRAIL AS DETAILED ON THE STRUCTURE PLANS.
7) POSTS 1 AND 2 ARE W8 x 13, 7'-6" LONG. ALL OTHER POSTS IN THE ANCHOR UNIT ARE W6 x 8.5.

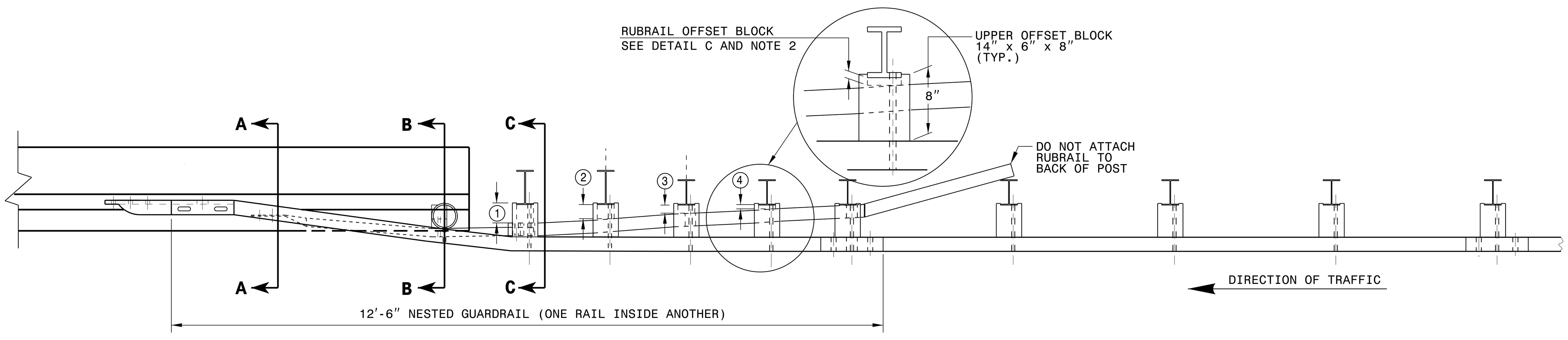

PLAN

SHEET 4 OF 7
862D03

GUARDRAIL ANCHOR UNIT TYPE B-77

STATE OF
NORTH CAROLINA
DEPT. OF TRANSPORTATION
DIVISION OF HIGHWAYS
RALEIGH, N.C.

ENGLISH DETAIL DRAWING FOR
STRUCTURE ANCHOR UNIT
GUARDRAIL ANCHOR UNIT TYPE B-77
FOR F-SHAPE BARRIER

SHEET 4 OF 7
862D03

STATE OF
NORTH CAROLINA
DEPT. OF TRANSPORTATION
DIVISION OF HIGHWAYS
RALEIGH, N.C.

ENGLISH DETAIL DRAWING FOR
STRUCTURE ANCHOR UNIT
GUARDRAIL ANCHOR UNIT TYPE B-77
FOR F-SHAPE BARRIER

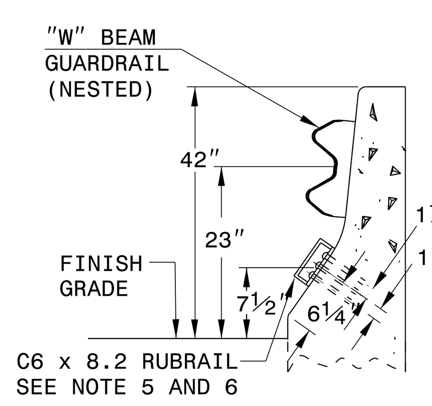

SECTION A-A

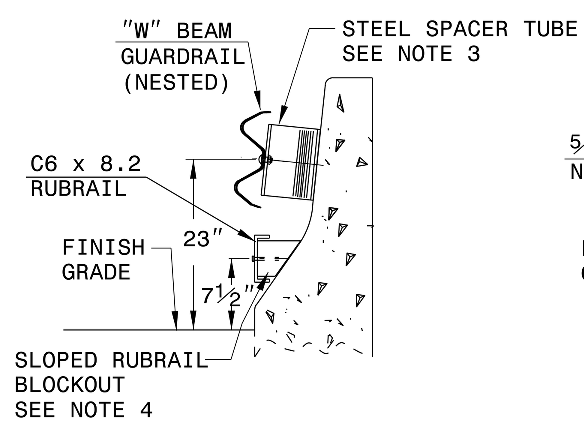

SECTION B-B

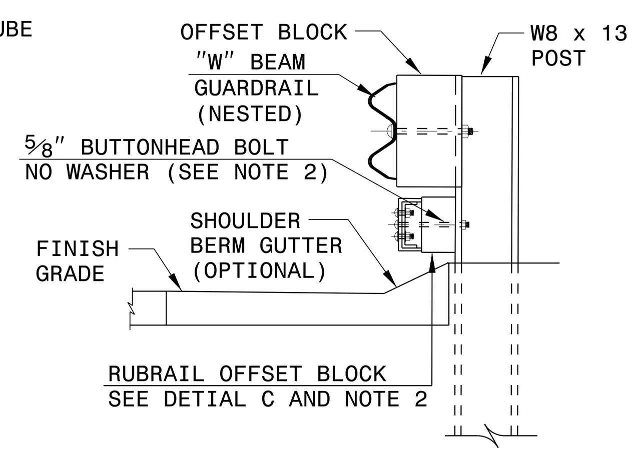

SECTION C-C

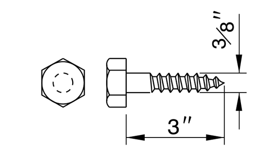

DETAIL E
LAG BOLT

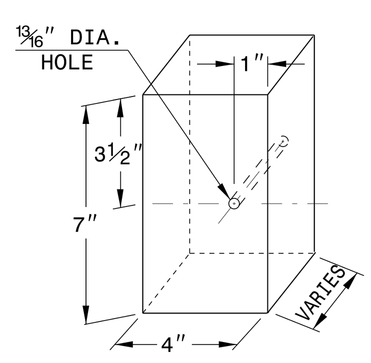

RUBRAIL BLOCKS 7" HIGH x 4" WIDE		
POST	THICKNESS	BOLT LENGTH
1	4¼"	9"
2	3¼"	5" *
3	2"	6"
4	1"	3" *

* BOLTS FOR POSTS 2 AND 4 ARE USED TO ATTACH BLOCK TO POST. RUBRAIL NOT ATTACHED TO BLOCK.

DETAIL C
RUBRAIL BLOCKOUT

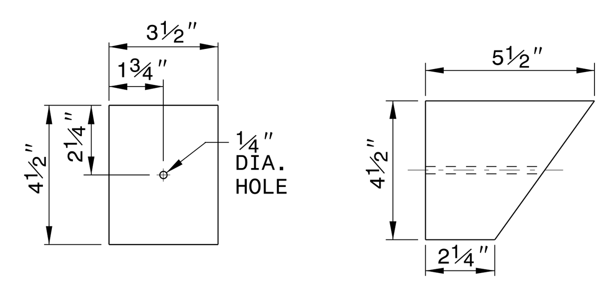

DETAIL D
SLOPED RUBRAIL BLOCKOUT

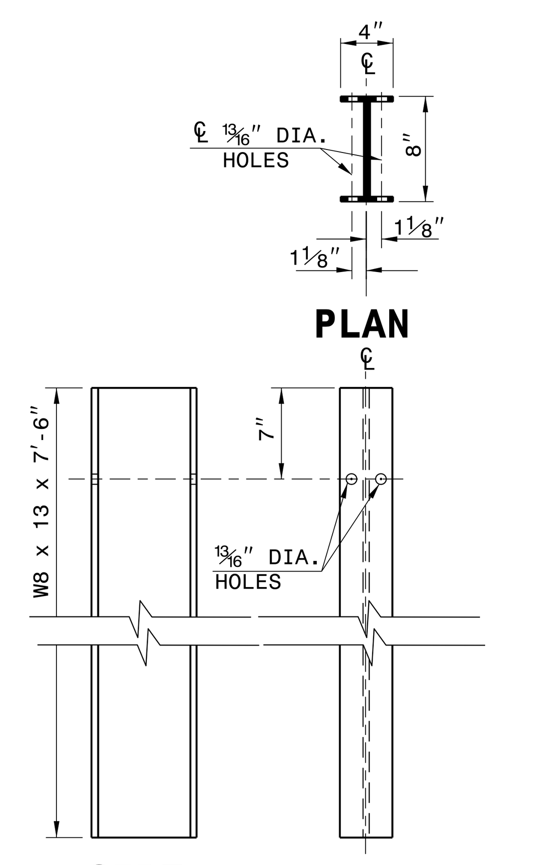

DETAIL F STEEL POST
"W8 X 13 X 7'-6"

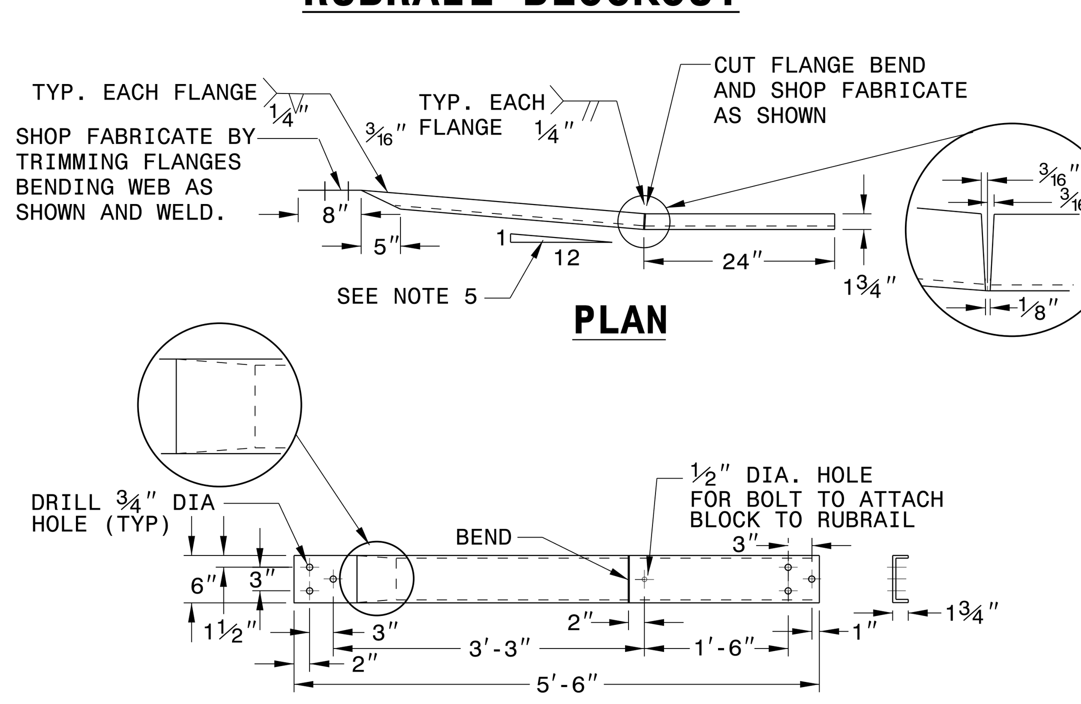

DETAIL A
C6 x 8.2 RUBRAIL

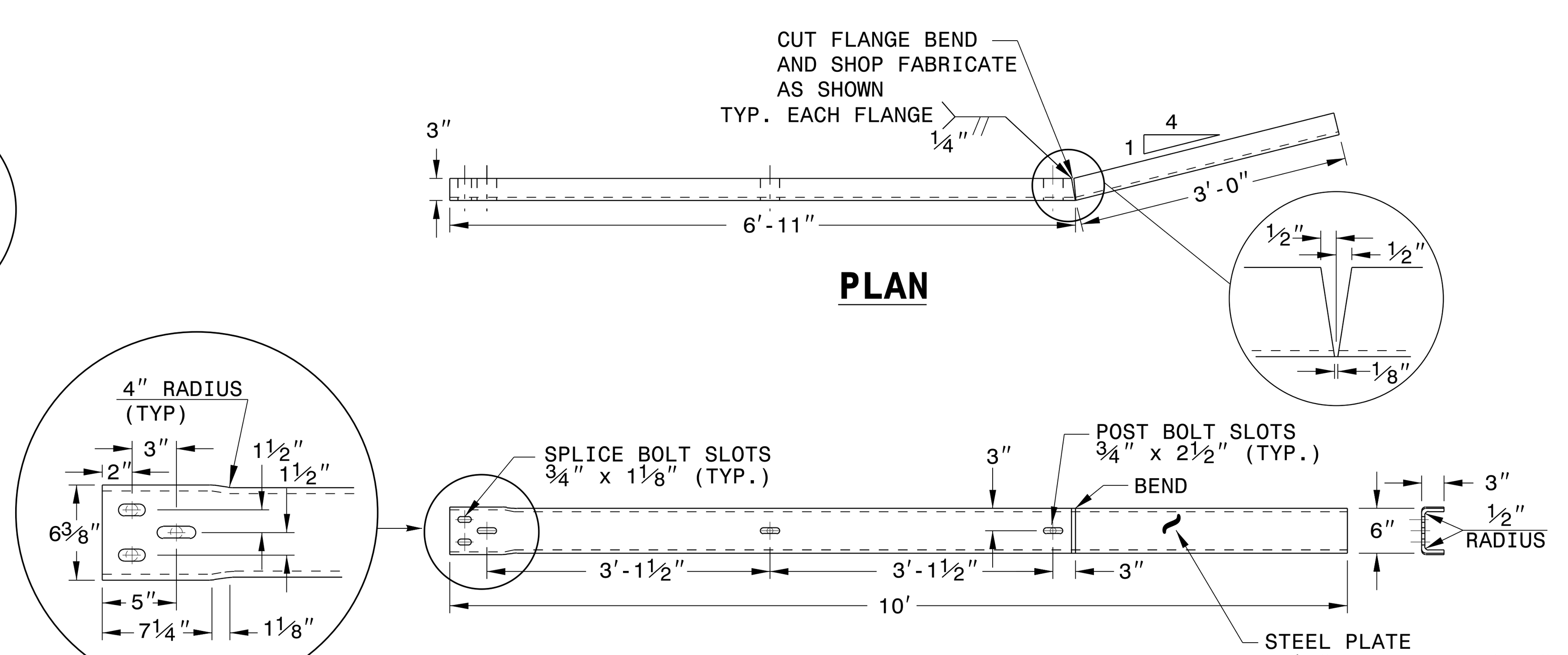

DETAIL B
BENT PLATE RUBRAIL

SHEET 5 OF 7
862D03

GUARDRAIL ANCHOR UNIT TYPE B-77

STATE OF
NORTH CAROLINA
DEPT. OF TRANSPORTATION
DIVISION OF HIGHWAYS
RALEIGH, N.C.

ENGLISH DETAIL DRAWING FOR
STRUCTURE ANCHOR UNIT
GUARDRAIL ANCHOR UNIT TYPE B-77
FOR F-SHAPE BARRIER

SHEET 5 OF 7
862D03

8/11/2015

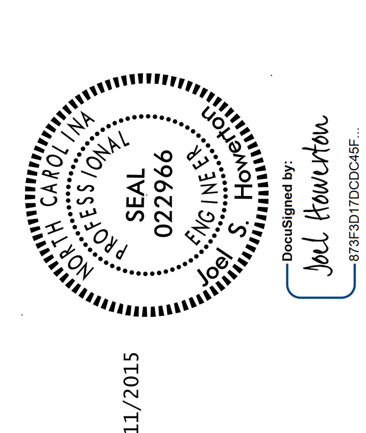

CONTRACT STANDARDS AND DEVELOPMENT UNIT
Office 919-707-6950 FAX 919-250-4119

SEE TITLE BLOCK

ORIGINAL BY: J HOWERTON DATE: 06-22-12
MODIFIED BY: DATE:
CHECKED BY: DATE:
FILE SPEC.:

$$$$$$SYSTIME$$$$$
$$$$$$$$$$$$$DGN$$$$$$$$$$$$$$
$$$$$USERNAME$$$$

PROJECT REFERENCE NO.	SHEET NO.
R-2603	2C-13

COAL COMBUSTION PRODUCT PLACEMENT

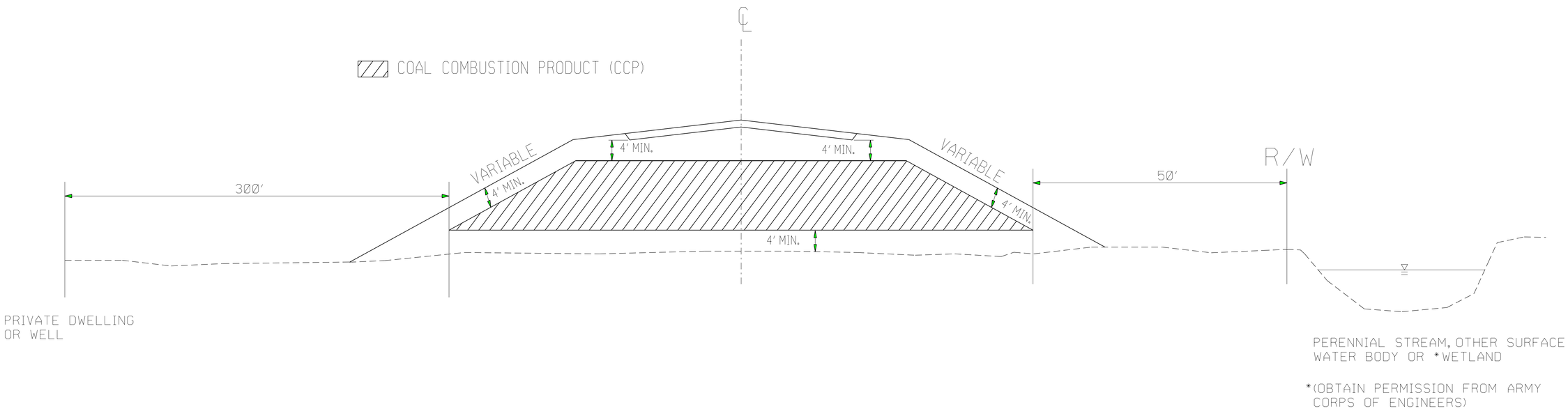

PLACE CCP IN HATCHED AREA IN ACCORDANCE
WITH THE PROJECT SPECIAL PROVISIONS

PLACE CCP A MINIMUM OF 5' ABOVE
SEASONAL HIGH GROUND WATER

PLACE AT LOCATIONS AS APPROVED BY THE ENGINEER

PLACE SOIL BORROW MATERIAL ON THE OUTSIDE
OF CCP AS EACH LIFT OF CCP IS PLACED

NORTH CAROLINA PROFESSIONAL SEAL 022966 ENGINEER Joel S. Howerton

DocuSigned by:
Joel S Howerton 3/17/2015
449E8E255221447...

CONTRACT STANDARDS AND DEVELOPMENT UNIT
Office 919-707-6950 FAX 919-250-4119

COAL COMBUSTION PRODUCT PLACEMENT DETAIL

ORIGINAL BY: J.S.H. DATE: 3/16/15
MODIFIED BY: DATE:
CHECKED BY: DATE:
FILE SPEC.: joel/coal combustion material detail.dgn

$$$$SYSTIME$$$$
$$$$TIME$$$$
$$$$USERNAME$$$$

PROJECT REFERENCE NO.	SHEET NO.
R-2603	2G-1

GEOTECHNICAL ENGINEER

NORTH CAROLINA PROFESSIONAL SEAL 022246 ENGINEER SCOTT A. HIDDEN

DocuSigned by: Scott A. Hidden 7/24/2015
F760CAEB96FC4D3...
SIGNATURE DATE

ENGINEER

SIGNATURE DATE

GROUNDWATER CONDITION (SEE NOTE 6)	H SHORING HEIGHT (FT)	SLOPE OR SURCHARGE CASE WITH NO TRAFFIC IMPACT					SURCHARGE CASE WITH TRAFFIC IMPACT				
		SHEET PILES		H-PILES WITH TIMBER LAGGING			SHEET PILES		H-PILES WITH TIMBER LAGGING		
		MINIMUM REQUIRED EMBEDMENT (FT)	MINIMUM REQUIRED SECTION MODULUS (IN^3/FT)	MINIMUM REQUIRED EMBEDMENT* (FT) (SEE NOTE 10)			MINIMUM REQUIRED EMBEDMENT (FT)	MINIMUM REQUIRED SECTION MODULUS (IN^3/FT)	MINIMUM REQUIRED EMBEDMENT* (FT) (SEE NOTE 10)		
				HP 10x42	HP 12x53	HP 14x73			HP 10x42	HP 12x53	HP 14x73
GROUNDWATER ELEVATION BEWTEEN BOTTOM OF SHORING AND PILE TIP	< 6	11.5	4.5	11.5	11.5	11.5	16.0	12.0	13.0	13.0	13.0
	7	13.0	7.0	13.0	13.0	13.0	17.0	14.5	14.5	14.5	14.5
	8	15.0	10.0	--	15.0	15.0	18.0	17.0	--	15.5	15.5
	9	17.0	14.0	--	17.0	17.0	19.0	20.0	--	17.0	17.0
	10	18.5	19.5	--	--	18.5	20.0	23.5	--	--	18.5
	11	20.5	26.0	--	--	--	21.0	28.0	--	--	20.0
	12	22.5	33.0	--	--	--	22.0	33.0	--	--	21.5
GROUNDWATER ELEVATION BELOW PILE TIP	< 6	7.5	3.0	8.0	8.0	8.0	11.0	10.0	9.5	9.5	9.5
	7	8.5	4.5	9.5	9.5	9.5	12.0	12.0	10.5	10.5	10.5
	8	10.0	6.5	10.5	10.5	10.5	12.5	14.0	11.5	11.5	11.5
	9	11.0	9.5	--	12.0	12.0	13.5	16.5	--	12.5	12.5
	10	12.5	13.0	--	--	13.5	14.0	19.5	--	13.5	13.5
	11	13.5	17.0	--	--	14.5	15.0	22.5	--	--	14.5
	12	15.0	21.5	--	--	16.0	16.0	25.5	--	--	15.5

MINIMUM REQUIRED EMBEDMENT AND SECTION MODULUS

*DO NOT USE H-PILES WITH TIMBER LAGGING FOR GROUNDWATER CONDITION, SHORING HEIGHT AND H-PILE SIZE SHOWN IF MINIMUM REQUIRED EMBEDMENT IS "--".

NOTES:

1. AT THE CONTRACTOR'S OPTION, USE STANDARD TEMPORARY SHORING AS NOTED IN THE PLANS.
2. FOR STANDARD TEMPORARY SHORING, SEE STANDARD SHORING PROVISION.
3. STANDARD TEMPORARY SHORING IS BASED ON THE FOLLOWING IN-SITU ASSUMED SOIL PARAMETERS:
   UNIT WEIGHT, γ = 120 LB/CF
   FRICTION ANGLE, ϕ = 30 DEGREES
   COHESION, c = 0 LB/SF
4. DO NOT USE STANDARD TEMPORARY SHORING IF ASSUMED SOIL PARAMETERS ARE NOT APPLICABLE.
5. DO NOT USE STANDARD TEMPORARY SHORING WHEN VERY LOOSE OR SOFT SOIL OR MUCK IS WITHIN THE EMBEDMENT DEPTH.
6. USE GROUNDWATER ELEVATION NOTED IN THE PLANS. IF NO GROUNDWATER ELEVATION IS SHOWN IN THE PLANS, USE "GROUNDWATER ELEVATION BETWEEN BOTTOM OF SHORING AND PILE TIP" FOR GROUNDWATER CONDITION. DO NOT USE STANDARD TEMPORARY SHORING IF GROUNDWATER IS ABOVE BOTTOM OF SHORING.
7. AT THE CONTRACTOR'S OPTION OR IF AVAILABLE CLEAR DISTANCE IS LESS THAN THE MINIMUM REQUIRED FOR CONCRETE BARRIER, SET BARRIER NEXT TO AND UP AGAINST TRAFFIC SIDE OF PILES AND USE "SURCHARGE CASE WITH TRAFFIC IMPACT".
8. AT THE CONTRACTOR'S OPTION OR IF AVAILABLE CLEAR DISTANCE IS LESS THAN 4' FOR TEMPORARY GUARDRAIL, ATTACH GUARDRAIL TO TRAFFIC SIDE OF PILES AS SHOWN IN THE PLANS AND USE "SURCHARGE CASE WITH TRAFFIC IMPACT".
9. MINIMUM REQUIRED EXTENSION IS 6" FOR "SLOPE OR SURCHARGE CASE WITH NO TRAFFIC IMPACT" AND 32" FOR "SURCHARGE CASE WITH TRAFFIC IMPACT".
10. MINIMUM REQUIRED EMBEDMENT FOR H-PILES WITH TIMBER LAGGING IS BASED ON DRIVEN H-PILES AT MAXIMUM 6' SPACING. AT THE CONTRACTOR'S OPTION, EMBEDMENT DEPTHS MAY BE REDUCED BY 25% FOR DRILLED-IN H-PILES.
11. SUBMIT A "STANDARD TEMPORARY SHORING SELECTION FORM" AT LEAST 7 DAYS BEFORE STARTING TEMPORARY SHORING CONSTRUCTION. UP TO 3 SHORING LOCATIONS MAY BE INCLUDED ON EACH FORM. STANDARD SHORING SELECTION FORMS ARE AVAILABLE FROM: connect.ncdot.gov/resources/Geological/Pages/Geotech_Forms_Details.aspx
12. CONTACT THE ENGINEER IF PILES DO NOT ATTAIN THE MINIMUM REQUIRED EMBEDMENT.

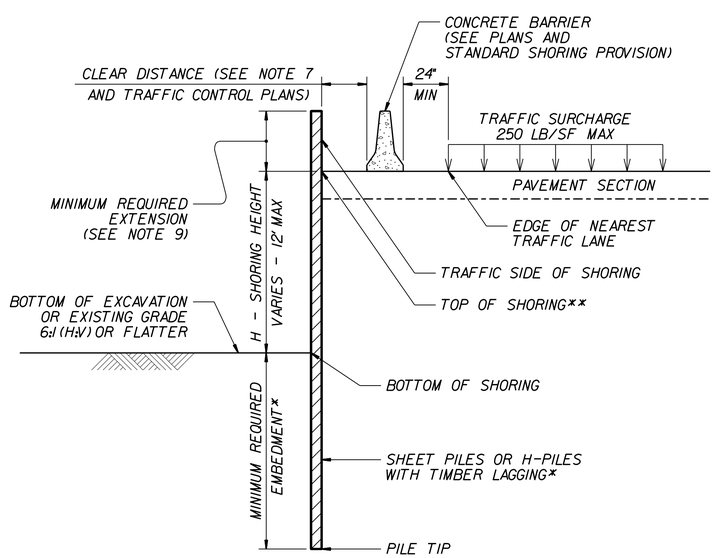

CONCRETE BARRIER

**TOP OF SHORING = EDGE OF PAVEMENT

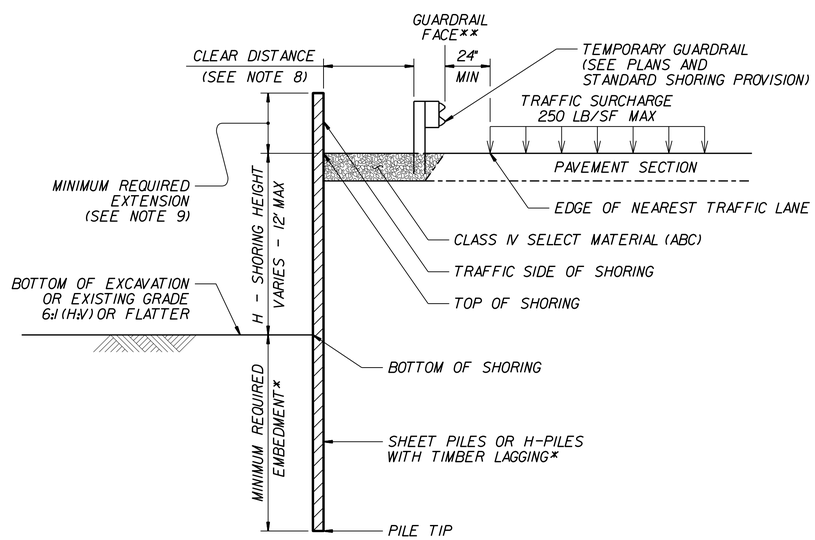

TEMPORARY GUARDRAIL

**GUARDRAIL FACE = EDGE OF PAVEMENT

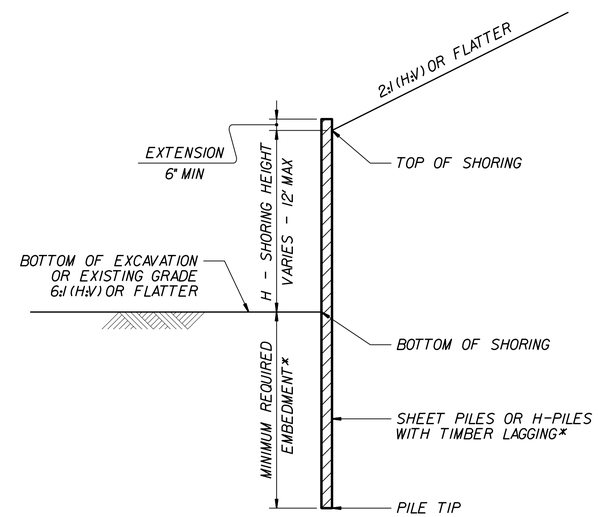

STANDARD TEMPORARY SHORING

(SLOPE CASE)
*SEE TABLE ABOVE.

STANDARD TEMPORARY SHORING

(SURCHARGE CASE)
*SEE TABLE ABOVE.

NORTH CAROLINA DEPARTMENT OF TRANSPORTATION
DIVISION OF HIGHWAYS

GEOTECHNICAL ENGINEERING UNIT

STANDARD DETAIL NO. 1801.01

STANDARD TEMPORARY SHORING

DATE: 11-19-13

PROJECT REFERENCE NO.	SHEET
R-2603	2H-1

GEOENVIRONMENTAL ENGINEER

NORTH CAROLINA PROFESSIONAL SEAL 31499 ENGINEER CYRUS F. PARKER

DocuSigned by: Cyrus Parker 8/12/2015
C96492AF5E824DF...

SIGNATURE DATE

ENGINEER

SIGNATURE DATE

Detail for Temporary Containment of Contaminated Soil

Cross-Section View

NOTE:
The Contractor shall stockpile all contaminated soil excavated from a property in a location within the property boundaries of the source parcel. If the volume of contaminated material exceeds available space on site, the Contractor shall obtain a permit from the NCDENR UST Section for off-site temporary storage.

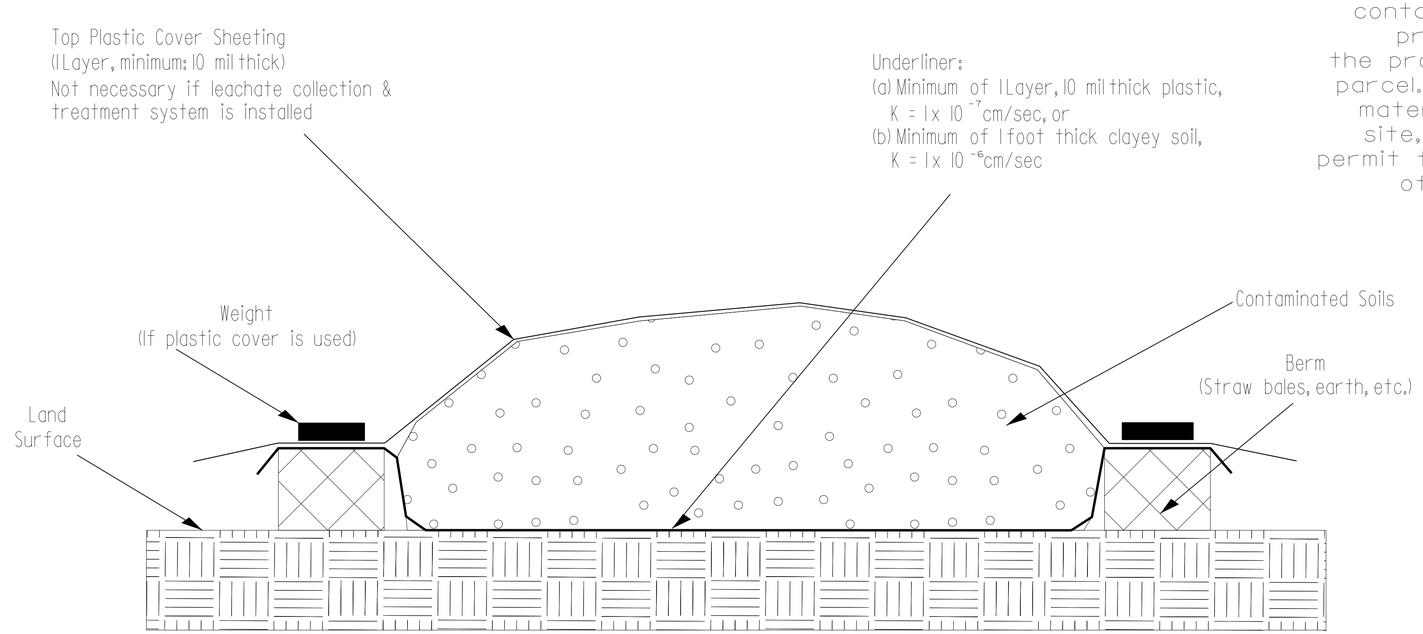

Map View

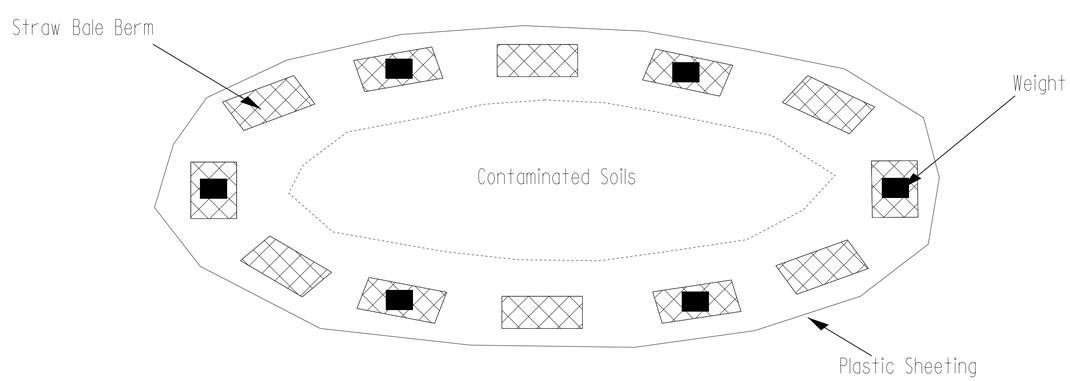

PREPARED BY:	DATE:
REVIEWED BY:	DATE:

GEOTECHNICAL ENGINEERING UNIT

STATE OF NORTH CAROLINA DEPARTMENT OF TRANSPORTATION

- ☐ EASTERN REGIONAL OFFICE
- ☐ WESTERN REGIONAL OFFICE
- ☒ CONTRACT OFFICE

STATE OF NORTH CAROLINA
DEPARTMENT OF TRANSPORTATION
RALEIGH

STOCKPILE CONTAINMENT DETAIL

REVISIONS

NO.	BY	DATE	NO.	BY	DATE
1			3		
2			4		

COMPUTED BY: RWP DATE: 10/31/2014
CHECKED BY: KSH DATE: 7/22/2015

STATE OF NORTH CAROLINA
DIVISION OF HIGHWAYS

SUMMARY OF EARTHWORK

IN CUBIC YARDS

PROJECT REFERENCE NO.	SHEET NO.
R-2603	3B-1

M A Engineering Consultants, Inc. NC License: F-0160
598 East Chatham Street Suite 137 Cary, NC 27511
Phone: 919.297.0220 Fax: 919.297.0221

NOTE: Earthwork quantities are calculated by the Roadway Design Unit. These Earthwork quantities are based in part on subsurface data provided by the Geotechnical Engineering Unit.

Quantities are approximate only. The Resident Engineer will recross-section the work accurately when the project is staked out. These cross-section notes will be used in computing the final quantities for which the contractor will be paid.

STATION to STATION	UNCLASSIFIED	UNDERCUT	EMBANK. +%	BORROW	WASTE
PHASE 1					
-L- 10+38.67 TO 19+00.00 LT	118		3,718	3,600	
-Y1A- 26+62.78 TO 32+53.11 LT	116		254	138	
-L- 25+00.00 TO 36+00.00 LT	929		35		894
-Y3- 10+06.00 TO 10+72.48	14		16	2	
-Y4- 10+00.00 TO 10+72.50	86		1		85
-L- 36+00.00 TO 64+00.00 LT	9,783		918		8,865
-Y5- 10+00.00 TO 10+72.46	5		16	11	
-Y6- 10+50.00 TO 11+72.17	257		13		244
-Y7DET- 5+40.00 TO 8+27.57	2,429				2,429
-Y7- 11+00.00 TO 14+20.20	2,806		7		2,799
-DRIVE2- 10+15.00 TO 11+43.00	510				510
-Y8- 13+00.00 TO 14+36.89	35		40	5	
-L- 133+50.00 TO 160+00.00 LT (INCLUDES -DRIVE4- EARTHWORK)	106,129		243		105,886
-DRIVE5- 10+06.25 TO 10+75.00	115				115
-Y15- 10+10.00 TO 11+64.69	902				902
-Y16DET- 11+38.30 TO 17+42.30	6,828		9		6,819
-Y16- 10+40.00 TO 14+52.50	4,451		81		4,370
-L- 160+00.00 TO 182+50.00 LT	23,961		5,288		18,673
-Y17- 11+15.00 TO 18+45.87	4,828		702		4,126
-L- 182+50.00 TO 195+00.00 LT	677		1,179	502	
-Y18- 17+50.00 TO 30+21.37 LT	15,228		446		14,782
-L- 10+50.00 TO 14+65.00 RT	66		97	31	
-Y2- 14+65.00 TO 17+14.58 RT			271	271	
-Y1- 15+00.00 TO 23+50.00 LT	216		791	575	
-Y1- 15+00.00 TO 32+32.91 RT	177		1,418	1,241	
-Y2- 17+93.62 TO 19+30.00 RT	3		125	122	
-Y2- 17+93.62 TO 19+30.00 LT	3		184	181	
-Y1- 24+74.00 TO 29+72.00 MED	71		309	238	
-Y1A- 24+55.44 TO 26+06.00 LT	12		71	59	
-Y2- 15+86.32 TO 17+14.58 LT	14		78	64	
-L- 25+00.00 TO 36+00.00 RT	98		2,414	2,316	
-L- 36+00.00 TO 55+00.00 RT	148		1,693	1,545	
-LDETOUR- 10+00.00 TO 18+72.92	1,452		10,088	8,636	
-L- 64+00.00 TO 90+00.00 RT	9,602		13,767	4,165	
-Y9DET- 10+10.39 TO 14+00.00	588		22		566
-Y9- 10+37.52 TO 13+25.00	4,571				4,571
-DRIVE7- 10+50.00 TO 11+75.00	957				957
-L- 90+00.00 TO 116+75.00 RT	23,175		19,766		3,409
-DRIVE6- 10+37.50 TO 13+33.60	10		3,087	3,077	
-DRIVE8- 10+00.00 TO 11+54.03			998	998	
-Y12- 10+51.20 TO 16+25.02	3,704		36		3,668
-DRIVE3- 10+10.00 TO 13+48.52	754		5		749
-L- 118+00.00 TO 135+00.00 RT	1,528		9,494	7,966	
-L- 177+00.00 TO 182+50.00 RT	203		702	499	
-L- 171+50.00 TO 182+00.00 MED	6		739	733	
-XOVR2- 10+43.29 TO 16+34.43			611	611	
-L- 182+50.00 TO 195+00.00 RT	11,328		64		11,264
PHASE 1 SUBTOTAL	238,893		79,796	37,586	196,683
WASTE TO REPLACE BORROW				-37,586	-37,586
PHASE 1 TOTAL	**238,893**		**79,796**	**0**	**159,097**
PHASE 2					
-L- 55+00.00 TO 64+00.00 RT	143		6,915	6,772	
-L- 135+00.00 TO 160+00.00 RT	447		4,467	4,020	
-L- 160+00.00 TO 177+00.00 RT	1,576		984		592
-L- MED 170+43.29 TO 176+34.27 LT & RT (-XOVR2- REMOVAL FOR MEDIAN CURB INSTALLATION)	103				103
-Y18- 31+17.25 TO 37+50.00; -Y18- 37+50.00 TO 42+40.00 RT	8,741		342		8,399
-Y18- 38+00.00 TO 42+40.00 LT	113		72		41
-DRIVE1- 10+20.00 TO 11+40.45	59		3		56
-Y19- 10+15.30 TO 13+00.00	1		757	756	
-L- 131+50.00 TO 138+50.00 MED	143		358	215	
-XOVR1- 11+97.97 TO 17+88.43			674	674	
-L- 182+50.00 TO 189+50.00 MED	112		331	219	
-L- 64+00.00 TO 90+00.00 LT	5,100		3,945		1,155
-L- 90+00.00 TO 116+50.00 LT	2,837		4,235	1,398	
-Y10- 11+56.49 TO 12+62.49	205		7		198
-Y11- 12+48.35 TO 13+59.19	24		110	86	
-L- 118+20.00 TO 133+50.00 LT	5,542		2,714		2,828
-Y18- 17+50.00 TO 30+21.37 RT	90		1,206	1,116	
PHASE 2 SUBTOTAL	25,236		27,120	15,256	13,372
WASTE TO REPLACE BORROW				-13,372	-13,372
PHASE 2 TOTAL	**25,236**		**27,120**	**1,884**	**0**

STATION to STATION	UNCLASSIFIED	UNDERCUT	EMBANK. +%	BORROW	WASTE
PHASE 3					
-L- MED 131+77.84 TO 137+66.81 LT & RT (-XOVR1- REMOVAL FOR MEDIAN CURB INSTALLATION)	102				102
PHASE 3 SUBTOTAL	102				102
WASTE TO REPLACE BORROW					
PHASE 3 TOTAL	**102**			**0**	**102**
PROJECT SUBTOTAL (PHASE 1 + PHASE 2 + PHASE 3)	**264,231**		**106,916**	**1,884**	**159,199**
ESTIMATED LOSS DUE TO CLEARING & GRUBBING	-6,500				-6,500
ESTIMATED SHOULDER MATERIAL			5,244	5,244	
PROJECT TOTAL	**257,731**		**112,160**	**7,128**	**152,699**
ESTIMATED 5% FOR REPLACING TOPSOIL ON BORROW PIT				357	
GRAND TOTAL (CUBIC YARDS)	**257,731**		**112,160**	**7,485**	**152,699**
SAY (CUBIC YARDS)	**257,800**			**7,500**	

ESTIMATED DRAINAGE DITCH EXCAVATION = 3,200 CY

ESTIMATED PAVEMENT STRUCTURE VOLUME: -L- LINE = 21,404 CY -Y- LINES (-Y9-, -Y12-, Y16-, -Y17-, -Y18-) = 2,357 CY

THE FOLLOWING QUANTITIES ARE PER THE "GEOTECHNICAL REPORT - DESIGN AND CONSTRUCTION RECOMMENDATIONS" LETTER DATED NOVEMBER 27, 2012)

ESTIMATED SELECT GRANULAR MATERIAL = 500 CY (CONTINGENCY, TO BE USED IN THE UNDERCUT FOR EMBANKMENT STABILITY OR UNDERCUT FOR SUBGRADE STABILITY LOCATIONS, AS DIRECTED BY THE ENGINEER.)

ESTIMATED UNDERCUT = 500 CY (CONTINGENCY, TO BE USED FOR UNDERCUT FOR SLOPE/EMBANKMENT STABILITY, AS DIRECTED BY THE ENGINEER.)

EARTHWORK TOTALS FOR ALTERNATE PAVEMENT DESIGN (10" DEPTH, ALL ASPHALT PAVEMENT IN PLACE OF ABC)

PROJECT SUBTOTAL	**264,231**		**106,916**	**1,884**	**159,199**
ADJUSTMENT FOR ALTERNATE PAVEMENT DESIGN	**-7,879**		**5,552**	**5,552**	**-7,879**
ADJUSTMENT WASTE TO REPLACE BORROW (96% +/- OF ADJUSTMENT BORROW QUANTITY CAN BE REPLACED WITH WASTE)				-5,330	-5,330
ESTIMATED LOSS DUE TO CLEARING & GRUBBING	-6,500				-6,500
ESTIMATED SHOULDER MATERIAL			3,703	3,703	
PROJECT TOTAL	**249,852**		**116,171**	**5,809**	**139,490**
ESTIMATED 5% FOR REPLACING TOPSOIL ON BORROW PIT				291	
GRAND TOTAL (CUBIC YARDS)	**249,852**		**116,171**	**6,100**	**139,490**
SAY (CUBIC YARDS)	**249,900**			**6,100**	

ESTIMATED PAVEMENT STRUCTURE VOLUME: -L- LINE = 13,707 CY -Y- LINES (-Y9-, -Y12-, Y16-, -Y17-, -Y18-) = 2,357 CY

7/22/2015 10:43:06 AM
R:\Roadway\Project\Working\R2603_EW_BALANCE CARD_PLANSHEET_03B-1.xls

COMPUTED BY: DBE DATE: 8-12-2014
CHECKED BY: RWP DATE: 06-09-2015

STATE OF NORTH CAROLINA
DIVISION OF HIGHWAYS

PROJECT REFERENCE NO.	SHEET NO.
R-2603	3B-2

M A Engineering Consultants, Inc. NC License: F-0160
598 East Chatham Street Suite 137 Cary, NC 27511
Phone: 919.297.0220 Fax: 919.297.0221

"N" = DISTANCE FROM EDGE OF LANE TO FACE OF GUARDRAIL.
TOTAL SHOULDER WIDTH = DISTANCE FROM EDGE OF TRAVEL LANE TO SHOULDER BREAK POINT.
FLARE LENGTH = DISTANCE FROM LAST SECTION OF PARALLEL GUARDRAIL TO END OF GUARDRAIL.
W = TOTAL WIDTH OF FLARE FROM BEGINNING OF TAPER TO END OF GUARDRAIL.
G = GATING IMPACT ATTENUATOR TYPE 350
NG = NON-GATING IMPACT ATTENUATOR TYPE 350

GUARDRAIL SUMMARY

SURVEY LINE	BEG. STA.	END STA.	LOCATION	LENGTH			WARRANT POINT		"N" DIST. FROM E.O.L.	TOTAL SHOULDER WIDTH	FLARE LENGTH		W		ANCHORS									IMPACT ATTENUATOR TYPE 350				REMOVE EXISTING GUARDRAIL (LF)	REMARKS
				STRAIGHT	SHOP CURVED	DOUBLE FACED	APPROACH END	TRAILING END			APPROACH END	TRAILING END	APPROACH END	TRAILING END	TYPE 350 TL-3	CAT-1	AT-1	TYPE III	B-77	TYPE 350 TL-2				NO. (EA)	PERMITTED G	PERMITTED NG			
-L-	30+81.64	33+56.25	RT	262.50	50.00		31+00	33+50	14'	14' BERM	6.25'	NA	4'	NA		1	1												DRIVEWAY AFFECTS APPROACH WARRANT
-L-	49+51.41	53+56.53	LT																								403	
-L-	57+67.50	60+64.50	RT	306.25			58+25	60+64.50	14'	14' BERM	50'	NA	1'	NA	1	1												DRIVEWAY AFFECTS APPROACH WARRANT
-L-	60+83.00	61+03.62	RT																								53	
-L-	74+85.00	79+05.00	RT	412.50			74+75	79+00	14'	14' BERM	50'	NA	1'	NA	1	1												DRIVEWAY AFFECTS APPROACH WARRANT
-L- /-DRIVE6-	94+75.00	11+60.00	RT /RT	375.00	75.00		95+75	11+50.00	14' or 2'	14' BERM or 5'	50'	NA	1'	NA	1	1												DRIVEWAY AFFECTS TRAILING WARRANT
-L-	113+73.75	116+42.50	LT	268.75				113+75	8'	11'	NA	NA	NA	NA		1												TIE TO EXISTING STRUCTURE ANCHOR UNIT
-L-	114+30.00	116+43.10	MED																								213	
-L-	114+92.06	116+43.10	MED LT	150.00					VARIES	VARIES	NA	NA	NA	NA										1		X		15:1 TRANSITION; TIE TO EXISTING STRUCTURE ANCHOR UNIT
-L-	114+92.06	116+60.00	MED RT	168.75			116+60		VARIES	VARIES	NA	NA	NA	NA					1									15:1 TRANSITION
-L-	113+75.29	116+60.00	RT	287.50	37.50		116+60		8'	11'	6.25'	NA	4'	NA			1	1										DRIVEWAY AFFECTS APPROACH WARRANT
-L-	115+54.43	116+49.17	LT																								95	
-L-	118+21.94	120+40.08	LT																								218	
-L-	118+21.38	119+15.66	MED																								87	
-L-	118+28.00	125+25.00	LT	700.00			118+10.00		8'	11'	50'	NA	1'	NA	1													TIE TO EXISTING STRUCTURE ANCHOR UNIT
-L-	118+28.25	119+61.80	MED LT	137.50			118+09.51		VARIES	VARIES	NA	NA	NA	NA										1		X		15:1 TRANSITION; TIE TO EXISTING STRUCTURE ANCHOR UNIT
-L-	118+10.00	119+61.80	MED RT	150.00					VARIES	VARIES	NA	NA	NA	NA					1									15:1 TRANSITION
-L-	118+10.00	124+35.00	RT	625.00				124+25	8'	11'	NA	NA	NA	NA		1		1										
-L-	129+25.00	137+78.00	RT	862.50			130+25	137+75	8'	11'	50'	NA	1'	NA	1	1												
-DRIVE4-	10+98.00	14+00.00	RT	287.50	25.00		11+25	14+00	2'	5'	25'	25'	0.5'	0.5'						2								
-L-	150+75.00	161+81.25	RT	1,112.50			151+75	161+75	8'	11'	50'	NA	1'	NA	1	1												
-L-	169+56.40	171+81.25	RT	212.50	50.00		170+04	171+75	8'	11'	6.25'	NA	4'	NA		1	1											DRIVEWAY AFFECTS APPROACH WARRANT
-L- /-Y18-	177+25.00	31+64.00	RT /RT	487.50	62.50		178+25	180+75	8'	11'	50'	NA	1'	NA	1	1												EXTENDED TRAILING END TO PROTECT POLES
-L- /-Y18-	180+20.00	29+35.00	LT /RT	162.50	87.50		181+75	180+25	8'	11'	6.25'	NA	4'	NA		1	1											-Y18- AFFECTS APPROACH WARRANT
-Y18-	20+25.00	26+31.25	RT	612.50			20+75	26+25	8'	11'	50'	NA	1'	NA	1	1												DRIVEWAY AFFECTS APPROACH WARRANT
		SUBTOTAL (LF)		7,581.25	387.50							TOTAL ANCHORS OR ATTENUATORS (EA)	8	12	4	2	2	2				2				1,069	TOTAL
		LESS ANCHORS (LF)		625.00																								
		TOTAL GUARDRAIL (LF)		6,956.25	387.50							ANCHOR UNIT LENGTH (LF)	50	6.25	6.25	18.75	18.75	25				2 EA				1,075 LF	SAY
		SAY GUARDRAIL (LF)		7,000.00	400.00		ADDITIONAL GUARDRAIL POSTS: SAY 10 EA					DEDUCTION PER TYPE (LF)	400	75	25	37.5	37.5	50									
												TOTAL DEDUCTION (LF)	625.00														

5/28/99
7/2/2015
21:10:04 PM
S:\roddey\proj\R2603_rdy_psh03B-2_Sum_Guardrail.dgn

COMPUTED BY: DBE DATE: 8-12-2014
CHECKED BY: RWP DATE: 06-24-2015

STATE OF NORTH CAROLINA
DIVISION OF HIGHWAYS

PROJECT REFERENCE NO.	SHEET NO.
R-2603	3B-3

M A Engineering Consultants, Inc. NC License: F-0160
598 East Chatham Street Suite 137 Cary, NC 27511
Phone: 919.297.0220 Fax: 919.297.0221

SUMMARY OF SHOULDER BERM GUTTER

IN LINEAR FEET

STATION TO STATION	LOCATION	LF
-L- STA. 113+80.00 to 116+36.69	LT	256.7
-L- STA. 113+96.00 to 116+35.83	RT	239.8
-L- STA. 118+34.47 to 124+75.00	LT	640.5
-L- STA. 118+34.87 to 124+29.00	RT	594.1
-L- STA. 151+24.00 to 161+76.00	RT	1,052.0
	TOTAL	2,783.2
	SAY	2,784

SUMMARY OF ASPHALT PAVEMENT REMOVAL

IN SQUARE YARDS

LINE	BEG STATION	END STATION	LOCATION	SQUARE YARDS
-L-	15+89	18+49	MED	651
-Y1-	24+73	29+74	MED	944
-Y2-	18+25	18+71	LT	6
-Y2-	17+83	18+17	RT	11
-Y3-	10+72	10+76	CL	22
-Y4-	10+00	10+76	CL	283
-Y5-	10+72	10+75	CL	18
-Y6-	10+50	11+79	CL	559
-Y7-	11+71	END OF EX. LEGION DR.	LT	1238
-L-	56+88	60+10	MED	440
-Y8-	14+37	14+55	CL	140
-L-	62+17	63+71	RT	13
-L-	64+83	70+41	LT	129
-L-	66+24	69+32	RT	250
-L-	80+00	86+25	CL	1482
-Y9-	10+17	13+25	CL	338
-Y9DET-	10+10	14+00	CL	800
-Y10-	12+62	12+67	CL	18
-Y11-	13+59	13+63	CL	41
-L-	103+92	104+94	MED	15
-Y12-	BEGINNING	15+97	RT	1446
-L-	107+37	BRIDGE	RT	2263
-L-	BRIDGE	130+75	RT	3522
-L-	134+43	140+40	CL	648
-Y16-	11+05	END OF VISTA LN.	CL	1355
-Y16DET-	11+38	17+42	CL	1046
-Y17-	12+52	END OF BEAUMONT	RT	1422
-L-	174+28	176+97	RT	35
-L-	183+60	189+30	MED	672
-Y18-	23+18	24+20	MED	19
-Y18-	26+52	29+20	RT	129
-Y18-	29+38	29+91	RT	34
-Y18-	31+06	38+88	CL	2048
-Y19-	10+27	12+50	CL	485
-DRIVE1-	10+82	10+57	CL	95
Temporary Pavement (See Work Zone Traffic Control Plans for additional information)				
-L-	54+90.00	60+88.00	LT	372
-L-	56+88.50	60+10.00	MEF	477
-L-	81+13.00		(Y19 TURNOUT)	132
-L-	98+43.00		(DRIVE6 TURNOUT)	99
-L-	103+50.00	115+18.00	LT	2028
-L-	106+40.00		Y12 TURNOUT	139
-L-	121+68.00	131+50.00	LT	1251
-L-	146+44.00		Y16 TURNOUT	57
-L-	163+80.00		Y17 TURNOUT	118
-XOVR1-	11+97.97	17+88.43	CL	533
-XOVR2-	10+43.29	16+34.43	CL	482
			TOTAL	28,303
			SAY	28,400

SUMMARY OF WOVEN WIRE FENCE, 47" FABRIC

IN LINEAR FEET AND EACH

STATION TO STATION	LT. or RT.	FABRIC LF	4" POSTS EA	5" POSTS EA
-L- 60+50.00 RT to -L- 62+60.37 RT	RT	245	13	10
-L- 70+30.00 LT to -L- 73+10.00 LT	LT	322	16	13
NOTE: LT. OR RT. INDICATES LEFT OR RIGHT OF THE MAIN LINE.	TOTAL	567	29	23
	SAY	600	34	27

SUMMARY OF CHAIN LINK FENCE, 48" FABRIC

IN LINEAR FEET AND EACH

STATION TO STATION	LT. or RT.	FABRIC (LF)	FABRIC, VINYL COATED (LF)	LINE POSTS (EA)	TERMINAL POSTS (EA)
-Y1A- 28+76.00 to -Y1A- 29+10.00	LT	41		4	4
-Y1- 29+00.00 to -Y1- 29+42.00	RT	46		4	4
-L- 44+17.00 to -L- 44+35.00	RT	61		2	3
	TOTAL	148		14	11
	SAY	160		16	13

SUMMARY OF FENCE GATES, CHAIN LINK

IN LINEAR FEET AND EACH

STATION TO STATION	LT. or RT.	SINGLE OR DOUBLE	HEIGHT x WIDTH x OPENING (IN)	GATES (EA)	METAL GATE POSTS (EA)
-L- 44+17.00 (51' RT TO 56' RT)	RT	SINGLE	48", 60", 60"	1	2
			TOTAL	1	2
			SAY	1	2

5/28/99

7/2/2015
2:16:07 PM
S:\roadway\proj\R2603_rdy_psh03B-3_Sum_PvmtRem_SBG_Fence.dgn

COMPUTED BY: RWP DATE: 2/18/2014

CHECKED BY: RSW DATE: 6/8/2014

Note: Invert Elevations indicated are for Bid Purposes only and shall not be used for project construction stakeout. See "Standard Specifications For Roads and Structures, Section 300-5".

NORTH CAROLINA DEPARTMENT OF TRANSPORTATION
DIVISION OF HIGHWAYS

REGIONAL
LIST OF PIPES, ENDWALLS, ETC. (FOR PIPES 48 INCHES & UNDER)

PROJECT NO. R-2603 | SHEET NO. 3D-1

STATION	LOCATION (LT, RT, OR CL)	STRUCTURE NO. FROM	STRUCTURE NO. TO	TOP ELEVATION	INVERT ELEVATION	INVERT ELEVATION	DRAINAGE PIPE 15"	DRAINAGE PIPE 18"	DRAINAGE PIPE 30"	C.S. PIPE 15" (.064)	R.C. PIPE CLASS III 15"	R.C. PIPE CLASS III 18"	R.C. PIPE CLASS III 24"	R.C. PIPE CLASS III 30"	R.C. PIPE CLASS III 36"	R.C. PIPE CLASS III 48"	MASONRY DRAINAGE STRUCTURES PER EACH (0' THRU 5.0')	LIN. FT. A 5.0' THRU 10.0'	C.B. STD. 840.01 OR STD. 840.02	GRATE E	GRATE F	GRATE G	DROP INLET	CATCH BASIN	D.I. STD. 840.14 OR 840.15	D.I. FRAME & GRATES STD. 840.16	G.D.I. TYPE "A" STD. 840.17 OR 840.26	G.D.I. TYPE "B" STD. 840.18 OR 840.27	J.B. STD. 840.31 OR 840.32	G.D.I. (N.S.) FRAME WITH TWO SAG GRATES STD. 840.24	MANHOLE FRAME AND COVER STD. 840.54	CONC. & BRICK PIPE PLUG (C.Y.) STD. 840.71	PIPE REMOVAL LIN. FT.	REMARKS
-L- 14+20	LT	0401		1147.6	1144.6												1		1			1												
		0401	0402		1144.6	1143.1					60																						49	REM 15"
-L- 14+20	RT	0402		1147.9	1143.1												1		1		1													
		0402	0403		1143.1	1129.9					204																						135	REM 15"
-Y2- 16+30	RT	0403		1133.1	1129.9												1						1		1	1								
		0403	0404		1129.9	1125.3					68																							
-Y2- 17+00	RT	0404		1128.4	1125.3												1						1		1	1								
		0404	0405		1125.3	1123.2					24																							
-Y2- 16+46	RT	0429		1132.3	1127.3												1											1		1				
		0429	0404		1127.3	1125.3					76																						102	REM 2-18"
-Y2- 17+08	LT	0405		1126.2	1123.2												1		1			1												
		0405	0407		1123.2	1114.2					152																						81	REM 15"
-L- 17+73	LT	0406		1123.4	1120.4												1		1			1												
		0406	0407		1120.4	1114.2					72																							
-L- 18+42	LT	0407		1117.4	1114.2												1		1		1													
		0407	0408		1114.2	1109.3						68																						
-Y1A- 26+50	RT	0408		1112.6	1109.3												1		1		1			1										
		0408	0409		1109.3	1105.9						64																				0.065	380	REM 3-18"; PLUG EX. 18" AT R/W
-Y1- 26+70	RT	0409		1109.2	1105.9												1		1		1													
		0409	0410		1105.9	1100.9						152																						
-Y1- 28+25	RT	0410		1104.1	1100.9												1		1		1													
-Y1- 29+10 (OUT)	RT	0410	0412		1100.9	1099.5							84																					REM 15" (SAME TRENCH)
-Y1A- 28+06	RT	0417		1106.7	1103.7												1		1		1			1										
		0417	0411		1103.7	1103.1					24																							
-Y1A- 28+31	RT	0411		1106.1	1103.1												1		1		1			1										
		0411	0410		1103.1	1100.9					40																							
NOT USED		0413	0414																															
NOT USED		0418																																
-Y1- 20+00	RT	0420		1156.8	1153.8												1		1		1													
		0420	0421		1153.8	1141.0					144																						84	REM 84' OF EX. 18"
-Y1- 21+45	RT	0421		1146.0	1141.0												1		1		1													
		0421	0422		1141.0	1137.8					12																							
-Y1- 21+62	RT	0419		1143.9	1141.2												1											1		1				
		0419	0422		1141.2	1137.8	16																											
-Y1- 21+57	RT	0422		1146.0	1137.8												1	3.2											1		1			
-Y1A- 21+92 (IN)	LT	0423	0425		1121.8	1117.5								208																			201	REM 2-30"
-Y1A- 23+91	RT	0424		1129.4	1126.2												1						1		1	1								
		0424	0425		1126.2	1124.0					44																							
-Y1- 23+74	RT	0425		1127.2	1121.8												1	0.4	1		1													
		0425	0426		1117.5	1114.6									44																			REM 30" (SAME TRENCH)
-Y1- 24+00	RT	0426		1119.6	1113.8												1	0.8									1			1				
-Y2- 19+30 (OUT)	LT	0426	0427		1113.8	1108.0										152																		REM 48" (SAME TRENCH)
-Y1- 22+32	RT	0428		1138.7	1130.5												1	3.2											1		1			
		0428	0426		1130.5	1113.8	160																										156	REM 15"
-Y1- 29+33	RT	0416		1103.3	1095.8												1	2.5	1	1														
-Y1- 29+30 (OUT)	RT	0416	0415		1095.8	1095.0			16																									
-Y1- 31+10	RT	0502		1105.7	1102.7												1		1			1												
		0502	0501		1102.7	1101.4				88																							206	REM 24" (174' SAME TRENCH)
-Y1- 30+20	RT	0501		1104.4	1101.4												1		1			1												
		0501	0416		1101.4	1095.8				88																								
-Y4- 9+86	LT	0516		1111.8	1109.1												1											1		1				
		0516	0515		1109.1	1107.6	40																										54	REM 18"
-Y4- 10+25	LT	0515		1110.3	1107.6												1											1		1				
		0515	0513		1107.6	1107.2	32																											
-L- 28+00	LT	0513		1110.7	1107.2												1											1		1				
		0513	0512		1107.2	1106.3						80																					52	REM 3-18"
-Y4- 10+37	RT	0514		1109.4	1106.4												1											1		1				
		0514	0512		1106.4	1106.3		40																									26	REM 18"
-L- 27+20	LT	0512		1110.5	1106.3												1		1		1													
		0512	0510		1106.3	1106.3						132																					161	REM 18"
SHEET TOTALS							248	40	16	176	920	496	84	208	44	152	29	10.1	17	1	11	5	3	3	3	3	1	6	2	7	2	0.065	1687	

ABBREVIATIONS

C.B.	CATCH BASIN
N.D.I.	NARROW DROP INLET
D.I.	DROP INLET
G.D.I.	GRATED DROP INLET
G.D.I.(N.S.)	GRATED DROP INLET (NARROW SLOT)
J.B.	JUNCTION BOX
M.H.	MANHOLE
T.B.D.I.	TRAFFIC BEARING DROP INLET
T.B.J.B.	TRAFFIC BEARING JUNCTION BOX

COMPUTED BY: RWP DATE: 2/18/2014

CHECKED BY: RSW DATE: 6/24/2014

Note: Invert Elevations indicated are for Bid Purposes only and shall not be used for project construction stakeout. See "Standard Specifications For Roads and Structures, Section 300-5".

NORTH CAROLINA DEPARTMENT OF TRANSPORTATION
DIVISION OF HIGHWAYS

STATEWIDE
LIST OF PIPES, ENDWALLS, ETC. (FOR PIPES 48 INCHES & UNDER)

PROJECT NO.: R-2603 SHEET NO.: 3D-2

STATION / SIZE / THICKNESS OR GAUGE	LOCATION (LT, RT, OR CL)	STRUCTURE NO. FROM	STRUCTURE NO. TO	TOP ELEVATION	INVERT ELEVATION	INVERT ELEVATION	SLOPE CRITICAL	DRAINAGE PIPE (RCP, CSP, CAAP, HDPE, or PVC) 12"	15"	18"	24"	30"	36"	DO NOT USE RCP	DO NOT USE CSP	DO NOT USE CAAP	DO NOT USE HDPE	C.S. PIPE 15" .064	18" .064	24" .064	36" .079	42" .109	48" .109
-L- 25+85	RT	0511		1108.6	1105.6																		
		0511	0510		1105.6	1104.4																	
-L- 25+86	LT	0510		1108.6	1104.4																		
		0510	0508		1104.4	1101.3																	
-L- 25+64	LT	0509		1108.6	1105.9																		
		0509	0510		1105.9	1104.4			32														
-Y1A- 31+58	LT	0508		1108.3	1101.3																		
		0508	0504		1101.3	1098.6																	
-Y1A- 31+55	LT	0507		1105.9	1101.9																		
		0507	0508		1101.9	1101.3			16														
-Y3- 10+26	LT	0506		1103.7	1099.7																		
		0506	0505		1099.7	1099.1																	
-Y3- 10+38	RT	0505		1105.1	1099.1																		
		0505	0504		1099.1	1098.6					44												
-Y1A- 30+60	LT	0504		1109.1	1098.6																		
		0504	0519		1098.6	1097.3																	
-Y1A- 29+85	LT	0519		1104.3	1097.3																		
		0519	0503		1097.3	1097.1																	
-Y1A- 29+62	LT	0503		1104.1	1097.1																		
		0503	0416		1097.1	1095.8																	
NOT USED		0517																					
-L- 28+98	LT	0518						12															
-L- 30+75	LT	0520		1108.8	1106.1																		
		0520	0521		1106.1	1104.4																	
-L- 31+25	RT	0522		1107.7	1104.7																		
		0522	0521		1104.7	1104.4																	
-L- 31+25	LT	0521		1107.7	1104.4																		
		0521	0527		1104.4	1099.8																	
-L- 32+46	LT	0526		1106.2	1101.2																		
		0526	0527		1101.2	1099.8			20														
-L- 32+47	LT	0527		1103.5	1099.8																		
		0527	0524		1099.8	1096.4																	
-L- 33+40	RT	0523		1099.7	1096.7																		
		0523	0524		1096.7	1096.4																	
-L- 33+39	LT	0525		1101.7	1097.7																		
		0525	0524		1097.7	1096.4					24												
-L- 33+40	LT	0524		1099.7	1095.4																		
		0524	0602		1095.4	1081.9																	
-L- 36+96	LT	0601		1086.2	1082.2																		
		0601	0602		1082.2	1081.9			20														
-L- 36+90	LT	0602		1086.9	1081.9																		
		0602	0606		1081.9	1077.6																	
-Y5- 10+16 (EX. DI)	RT	0603	0604		1078.8	1078.0																	
-Y5- 10+29	LT	0604		1085.0	1078.0																		
		0604	0605		1078.0	1077.8																	
-Y5- 10+44	LT	0605		1084.8	1077.8																		
		0605	0606		1077.8	1077.6																	
-L- 37+80	LT	0606		1084.6	1077.6																		
		0606	0607		1077.6	1076.6																	
-L- 37+80	RT	0607		1084.6	1076.6																		
		0607	0608		1076.6	1076.3																	
-L- 37+63	RT	0608		1085.6	1076.3																		
NOT USED		0609	0611																				
-L- 40+57	LT	0612		1082.8	1080.1																		
		0612	0613		1080.5	1077.5			36														
-L- 40+35	LT	0613		1080.5	1077.5																		
		0613	0614		1077.5	1077.3																	
-L- 40+35	RT	0614		1080.5	1077.3																		
		0614	0617		1077.3	1075.2																	
-L- 42+74	RT	0617		1078.2	1075.2																		
		0617	0615		1075.2	1074.7																	
-L- 43+01	RT	0615		1077.7	1074.7																		
		0615	0618		1074.7	1074.0																	
SHEET TOTALS								12	124		68												

STATION	STRUCTURE NO. FROM	STRUCTURE NO. TO	R.C. PIPE CLASS III 15"	18"	24"	30"	36"	42"	48"	R.C. PIPE CLASS IV 15"	18"	24"	30"	36"	42"	48"	15" SIDE DRAIN PIPE	18" SIDE DRAIN PIPE	24" SIDE DRAIN PIPE	ENDWALLS STD. 838.01, 838.11 OR STD. 838.80 (UNLESS NOTED OTHERWISE) CU. YARDS R.C.P.	C.S.P.	QUANTITIES FOR MASONRY DRAINAGE STRUCTURES *TOTAL L.F. FOR PAY QUANTITY SHALL BE: COL. 'A' + (1.3 X COL. 'B') PER EACH (0' THRU 5.0')	LIN. FT.* A 5.0' THRU 10.0'	LIN. FT.* B 10.0' AND ABOVE	C.B. STD. 840.01 OR STD. 840.02	FRAME, GRATES, AND HOOD STANDARD 840.03 TYPE OF GRATE E	F	G
-L- 25+85	0511																					1			1			1
	0511	0510	60																									
-L- 25+86	0510																					1			1		1	
	0510	0508			180																							
-L- 25+64	0509																					1						
	0509	0510																										
-Y1A- 31+58	0508																					1	2.0		1		1	
	0508	0504				96																						
-Y1A- 31+55	0507																					1						
	0507	0508																										
-Y3- 10+26	0506																					1						
	0506	0505	48																									
-Y3- 10+38	0505																					1	1.0					
	0505	0504																										
-Y1A- 30+60	0504																					1	5.0	0.5	1		1	
	0504	0519				76																						
-Y1A- 29+85	0519																					1	2.0		1		1	
	0519	0503				24																						
-Y1A- 29+62	0503																					1	2.0		1	1		
	0503	0416				60																						
NOT USED	0517																											
-L- 28+98	0518																					1						
-L- 30+75	0520																					1						
	0520	0521	52																									
-L- 31+25	0522																					1			1		1	
	0522	0521	60																									
-L- 31+25	0521																					1			1			1
	0521	0527	120																									
-L- 32+46	0526																					1						
	0526	0527																										
-L- 32+47	0527																					1			1			1
	0527	0524	92																									
-L- 33+40	0523																					1			1		1	
	0523	0524	60																									
-L- 33+39	0525																					1						
	0525	0524																										
-L- 33+40	0524																					1			1			1
	0524	0602			352																							
-L- 36+96	0601																					1						
	0601	0602																										
-L- 36+90	0602																					1			1			1
	0602	0606			92																							
-Y5- 10+16 (EX. DI)	0603	0604							44																			
-Y5- 10+29	0604																					1	2.0		1	1		
	0604	0605							24																			
-Y5- 10+44	0605																					1	2.0					
	0605	0606							28																			
-L- 37+80	0606																					1	2.0		1			1
	0606	0607							60																			
-L- 37+80	0607																					1	3.0		1		1	
	0607	0608							24																			
-L- 37+63	0608																					1	4.3					
NOT USED	0609	0611																										
-L- 40+57	0612																					1						
	0612	0613																										
-L- 40+35	0613																					1			1			1
	0613	0614	60																									
-L- 40+35	0614																					1			1		1	
	0614	0617	240																									
-L- 42+74	0617																					1			1		1	
	0617	0615		28																								
-L- 43+01	0615																					1						
	0615	0618		36																								
SHEET TOTALS			792	64	624	256			180													31	25.3	0.5	18	2	9	7

STATION	STRUCTURE NO. FROM	STRUCTURE NO. TO	CONCRETE TRANSITIONAL SECTION DROP INLET	CATCH BASIN	O.T.C.B. STD. 840.04 OR 840.05	D.I. STD. 840.14 OR 840.15	D.I. FRAME & GRATES STD. 840.16	G.D.I. TYPE "A" STD. 840.17 OR 840.26	G.D.I. TYPE "B" STD. 840.18 OR 840.27	G.D.I. TYPE "D" STD. 840.19 OR 840.28	J.B. STD. 840.31 OR 840.32	T.B.J.B. STD. 840.34	T.B.D.I. STD. 840.35 (FOR CAST IRON FRAME & GRATES)		DRIVEWAY DROP INLET, STD. 840.30				G.D.I. (N.S.) FRAME WITH SAG GRATE STD. 840.24	G.D.I. (N.S.) FRAME WITH TWO SAG GRATES STD. 840.24	G.D.I. (N.S.) FRAME WITH SAG GRATE STD. 840.29	G.D.I. (N.S.) FRAME WITH TWO FLAT GRATES STD. 840.29	FRAME WITH GRATES, DRIVEWAY DROP INLET, STD. 840.30	MANHOLE FRAME AND COVER STD. 840.54	TEMPORARY 1" STEEL COVER (SEE DETAIL ON SHEET 2C-10)	PREFORMED SCOUR HOLE		BERM DRAINAGE OUTLET (SY) STD. 850.10 OR 850.11	CONVERT EXIST. D.I. TO J.B. w / MH (SEE DETAIL ON SHEET 2C-4)			ADJUST EXIST. C.B.	ADJUST EXIST. D.I.	FLOWABLE FILL (CY)	CORR. STEEL PIPE ELBOWS - NO. & SIZE (INCHES)	DRAINAGE PIPE ELBOWS - NO. & SIZE (INCHES)	CONC. & BRICK PIPE PLUG (C.Y.) STD. 840.71	CONC. COLLARS CL. "B" (C.Y.) STD. 840.72	PIPE REMOVAL LIN. FT.	REMARKS
-L- 25+85	0511																																							
	0511	0510																																						REM 24" (SAME TRENCH)
-L- 25+86	0510																																							
	0510	0508																																						
-L- 25+64	0509								1											1																				
	0509	0510																																						
-Y1A- 31+58	0508																																							
	0508	0504																																						
-Y1A- 31+55	0507								1											1																				
	0507	0508																																					33	REM 15"
-Y3- 10+26	0506							1											1	1																				
	0506	0505																																						
-Y3- 10+38	0505							1														1																		
	0505	0504																																						
-Y1A- 30+60	0504																																							
	0504	0519																																						
-Y1A- 29+85	0519																																							
	0519	0503																																					243	REM 3-15"
-Y1A- 29+62	0503																																							
	0503	0416																																						
NOT USED	0517																																							
-L- 28+98	0518														1								30																	
-L- 30+75	0520								1											1																				
	0520	0521																																					20	REM 20' OF EX. 18"
-L- 31+25	0522																																							
	0522	0521																																						
-L- 31+25	0521																																							
	0521	0527																																					283	REM 18"
-L- 32+46	0526								1													1																		
	0526	0527																																						
-L- 32+47	0527																																							
	0527	0524																																						
-L- 33+40	0523																																						421	REM 18" (0523 - 0607)
	0523	0524																																						REM 18" (SAME TRENCH)
-L- 33+39	0525							1														1																		
	0525	0524																																					18	REM 18' OF EX. 15"
-L- 33+40	0524																																							
	0524	0602																																						
-L- 36+96	0601							1											1	1																				
	0601	0602																																					68	REM 3-18"
-L- 36+90	0602																																							
	0602	0606																																						
-Y5- 10+16 (EX. DI)	0603	0604																																						
-Y5- 10+29	0604																																							
	0604	0605																																						
-Y5- 10+44	0605							1														1																		
	0605	0606																																						
-L- 37+80	0606																																							
	0606	0607																																						
-L- 37+80	0607																																							
	0607	0608																																						
-L- 37+63	0608										1													1										60.0					14	REM 14' OF EX. 48"; FILL 124' w/FLOWABLE FILL
NOT USED	0609	0611																																						
-L- 40+57	0612								1													1																		
	0612	0613																																						
-L- 40+35	0613																																							
	0613	0614																																						
-L- 40+35	0614																																							
	0614	0617																																						
-L- 42+74	0617																																							
	0617	0615																																						
-L- 43+01	0615													1								1																		
	0615	0618																																					175	REM 2-18"
SHEET TOTALS								5	5		1		1		1				2	5		6	30	1										60.0					1275	

ABBREVIATIONS

C.B.	CATCH BASIN
N.D.I.	NARROW DROP INLET
D.I.	DROP INLET
G.D.I.	GRATED DROP INLET
G.D.I.(N.S.)	GRATED DROP INLET (NARROW SLOT)
J.B.	JUNCTION BOX
M.H.	MANHOLE
T.B.D.I.	TRAFFIC BEARING DROP INLET
T.B.J.B.	TRAFFIC BEARING JUNCTION BOX

7/2/2015 14:09
R:\Roadway\Proj\R2603_rdy_psh03D-1_thru_3D-12_DrainageSummaries.xls

COMPUTED BY: RWP DATE: 2/18/2014

CHECKED BY: RSW DATE: 6/24/2014

Note: Invert Elevations indicated are for Bid Purposes only and shall not be used for project construction stakeout. See "Standard Specifications For Roads and Structures, Section 300-5".

NORTH CAROLINA DEPARTMENT OF TRANSPORTATION
DIVISION OF HIGHWAYS

STATEWIDE
LIST OF PIPES, ENDWALLS, ETC. (FOR PIPES 48 INCHES & UNDER)

PROJECT NO.	SHEET NO.
R-2603	3D-3

STATION	LOCATION (LT, RT, OR CL)	STRUCTURE NO. FROM	STRUCTURE NO. TO	TOP ELEVATION	INVERT ELEVATION	INVERT ELEVATION	SLOPE CRITICAL
-L- 43+38	RT	0618		1077.8	1074.0		
		0618	0616		1074.0	1073.1	
-L- 43+38	RT	0645		1077.2	1074.2		
		0645	0618		1074.2	1074.0	
-L- 44+14	RT	0616		1077.3	1073.1		
-L- 44+22 (OUT)	RT	0616	0644		1073.1	1073.0	
-L- 42+00	LT	0624		1078.2	1075.4		
		0624	0620		1075.4	1075.2	
-L- 42+89	LT	0619		1079.2	1076.4		
		0619	0620		1076.4	1074.6	
-L- 43+01	LT	0620		1077.6	1074.6		
		0620	0621		1074.6	1070.0	
-L- 43+74	LT	0621		1078.1	1070.0		
-L- 44+00	LT	0623		1078.2	1075.2		
		0623	0622		1075.2	1073.5	
-L- 44+01	LT	0622		1077.5	1073.5		
		0622	0621		1073.5	1072.0	
-L- 47+26	RT	0632		1085.8	1083.0		
		0632	0631		1083.0	1082.7	
-L- 47+25	RT	0631		1086.0	1082.7		
		0631	0628		1082.7	1078.8	
-L- 46+04	RT	0627		1083.9	1080.9		
		0627	0628		1080.9	1078.8	
-L- 46+00	LT	0630		1082.1	1079.3		
		0630	0629		1079.3	1079.1	
-L- 46+00	LT	0629		1082.3	1079.1		
		0629	0628		1079.1	1078.8	
-L- 46+00	RT	0628		1082.3	1078.8		
		0628	0626		1078.8	1075.4	
-L- 44+35	RT	0626		1078.6	1075.1		
-L- 44+26 (OUT)	RT	0626	0625		1075.1	1073.4	
NOT USED		0633	0634				
-Y6- 10+71	LT	0635		1093.2	1088.9		
		0635	0636		1088.9	1088.6	
-Y6- 10+78	RT	0636		1092.8	1088.6		
		0636	0637		1088.6	1084.4	
-Y6- 11+39	RT	0637		1088.6	1084.4		
		0637	0639		1084.4	1084.0	
-L- 48+81(IN)	LT	0638	0639		1092.8	1088.0	
-L- 48+81	LT	0639		1092.0	1084.0		
		0639	0640		1084.0	1083.8	
-L- 49+10 (IN)	LT	0643	0640		1092.2	1085.1	
-L- 49+00	LT	0640		1091.1	1084.1		
		0640	0641		1084.1	1079.4	
-L- 49+00	RT	0641		1098.1	1084.1		
-L- 49+18 (OUT)	RT	0641	0642		1084.1	1079.4	
-Y7- 13+55	RT	0703		1095.0	1092.2		
		0703	0702		1092.2	1091.9	
-Y7- 13+50	LT	0704		1095.6	1092.8		
		0704	0702		1092.8	1091.9	
-Y7- 13+96	RT	0702		1095.2	1091.9		
		0702	0701		1091.9	1090.7	
-L- 51+50	LT	0701		1095.7	1090.7		
		0701	0640		1090.7	1085.1	
-L- 53+71	RT	0706		1097.1	1094.3		
		0706	0707		1094.3	1091.3	
-L- 54+00	LT	0707		1094.3	1091.3		
		0707	0708		1091.3	1085.9	
SHEET TOTALS							

STATION	FROM	TO	DRAINAGE PIPE (RCP, CSP, CAAP, HDPE, or PVC) 12"	15"	18"	24"	30"	36"	DO NOT USE RCP	DO NOT USE CSP	DO NOT USE CAAP	DO NOT USE HDPE	C.S. PIPE 15" (.064)	18" (.064)	24" (.064)	36" (.079)	42" (.109)	48" (.109)	R.C. PIPE CLASS III 15"	18"	24"	30"	36"	42"	48"	R.C. PIPE CLASS IV 15"	18"	24"	30"	36"	42"	48"
-L- 43+38	0618																															
	0618	0616																		76												
-L- 43+38	0645																															
	0645	0618		16																												
-L- 44+14	0616																															
-L- 44+22 (OUT)	0616	0644			8																											
-L- 42+00	0624																															
	0624	0620																	100													
-L- 42+89	0619																															
	0619	0620		28																												
-L- 43+01	0620																															
	0620	0621																	72													
-L- 43+74	0621																															
-L- 44+00	0623																															
	0623	0622		16					X																							
-L- 44+01	0622																															
	0622	0621		28																												
-L- 47+26	0632																															
	0632	0631		20																												
-L- 47+25	0631																															
	0631	0628																	124													
-L- 46+04	0627																															
	0627	0628		20																												
-L- 46+00	0630																															
	0630	0629		12																												
-L- 46+00	0629																															
	0629	0628																	60													
-L- 46+00	0628																															
	0628	0626																		164												
-L- 44+35	0626																															
-L- 44+26 (OUT)	0626	0625			20																											
NOT USED	0633	0634																														
-Y6- 10+71	0635																															
	0635	0636																				40										
-Y6- 10+78	0636																															
	0636	0637																				60										
-Y6- 11+39	0637																															
	0637	0639																				124										
-L- 48+81(IN)	0638	0639		12					X																							
-L- 48+81	0639																															
	0639	0640					20		X																							
-L- 49+10 (IN)	0643	0640		20																												
-L- 49+00	0640																															
	0640	0641																				60										
-L- 49+00	0641																															
-L- 49+18 (OUT)	0641	0642					40																									
-Y7- 13+55	0703																															
	0703	0702																	56													
-Y7- 13+50	0704																															
	0704	0702																	56													
-Y7- 13+96	0702																															
	0702	0701		52																												
-L- 51+50	0701																															
	0701	0640																	248													
-L- 53+71	0706																															
	0706	0707																	96													
-L- 54+00	0707																															
	0707	0708																	244													
SHEET TOTALS				224	28		60												1056	240		284										

STATION	FROM	TO	15" SIDE DRAIN PIPE	18" SIDE DRAIN PIPE	24" SIDE DRAIN PIPE	ENDWALLS STD. 838.01 838.11 OR STD. 838.80 (UNLESS NOTED OTHERWISE) CU. YARDS R.C.P.	C.S.P.	QUANTITIES FOR MASONRY DRAINAGE STRUCTURES PER EACH (0' THRU 5.0')	LIN. FT.* A 5.0' THRU 10.0'	B 10.0' AND ABOVE	C.B. STD. 840.01 OR STD. 840.02	FRAME, GRATES, AND HOOD STANDARD 840.03 TYPE OF GRATE E	F	G	CONCRETE TRANSITIONAL SECTION DROP INLET	CATCH BASIN	O.T.C.B. STD. 840.04 OR 840.05	D.I. STD. 840.14 OR 840.15	D.I. FRAME & GRATES STD. 840.16	G.D.I. TYPE "A" STD. 840.17 OR 840.26	G.D.I. TYPE "B" STD. 840.18 OR 840.27	G.D.I. TYPE "D" STD. 840.19 OR 840.28	J.B. STD. 840.31 OR 840.32	T.B.J.B. STD. 840.34	T.B.D.I. STD. 840.35 (FOR CAST IRON FRAME & GRATES)	DRIVEWAY DROP INLET, STD. 840.30
-L- 43+38	0618							1			1			1												
	0618	0616																								
-L- 43+38	0645							1			1	1														
	0645	0618																								
-L- 44+14	0616							1			1	1														
-L- 44+22 (OUT)	0616	0644																								
-L- 42+00	0624							1			1			1												
	0624	0620																								
-L- 42+89	0619							1													1					
	0619	0620																								
-L- 43+01	0620							1			1	1														
	0620	0621																								
-L- 43+74	0621																									
-L- 44+00	0623							1			1		1													
	0623	0622																								
-L- 44+01	0622							1												1						
	0622	0621																								
-L- 47+26	0632							1													1					
	0632	0631																								
-L- 47+25	0631							1			1			1												
	0631	0628																								
-L- 46+04	0627							1													1					
	0627	0628																								
-L- 46+00	0630							1													1					
	0630	0629																								
-L- 46+00	0629							1			1		1													
	0629	0628																								
-L- 46+00	0628							1			1			1												
	0628	0626																								
-L- 44+35	0626							1			1			1												
-L- 44+26 (OUT)	0626	0625																								
NOT USED	0633	0634																								
-Y6- 10+71	0635							1			1			1												
	0635	0636																								
-Y6- 10+78	0636							1												1						
	0636	0637																								
-Y6- 11+39	0637							1			1		1													
	0637	0639																								
-L- 48+81(IN)	0638	0639																								
-L- 48+81	0639							1	3.0														1			
	0639	0640																								
-L- 49+10 (IN)	0643	0640																								
-L- 49+00	0640							1	2.0		1		1													
	0640	0641																								
-L- 49+00	0641							1	5.0	4.0	1			1												
-L- 49+18 (OUT)	0641	0642																								
-Y7- 13+55	0703							1													1					
	0703	0702																								
-Y7- 13+50	0704							1													1					
	0704	0702																								
-Y7- 13+96	0702							1			1	1														
	0702	0701																								
-L- 51+50	0701							1			1		1													
	0701	0640																								
-L- 53+71	0706							1													1					
	0706	0707																								
-L- 54+00	0707							1			1			1												
	0707	0708																								
SHEET TOTALS								27	10.0	4.0	17	4	5	8						2	7		1			

STATION	FROM	TO	G.D.I. (N.S.) FRAME WITH SAG GRATE STD. 840.24	G.D.I. (N.S.) FRAME WITH TWO SAG GRATES STD. 840.24	G.D.I. (N.S.) FRAME WITH SAG GRATE STD. 840.29	G.D.I. (N.S.) FRAME WITH TWO FLAT GRATES STD. 840.29	FRAME WITH GRATES, DRIVEWAY DROP INLET, STD. 840.30	MANHOLE FRAME AND COVER STD. 840.54	TEMPORARY 1" STEEL COVER (SEE DETAIL ON SHEET 2C-10)	PREFORMED SCOUR HOLE	BERM DRAINAGE OUTLET (SY) STD. 850.10 OR 850.11	CONVERT EXIST. D.I. TO J.B. w / MH (SEE DETAIL ON SHEET 2C-4)	ADJUST EXIST. C.B.	ADJUST EXIST. D.I.	FLOWABLE FILL (CY)	CORR. STEEL PIPE ELBOWS - NO. & SIZE (INCHES)	DRAINAGE PIPE ELBOWS - NO. & SIZE (INCHES)	CONC. & BRICK PIPE PLUG (C.Y.) STD. 840.71	CONC. COLLARS CL. "B" (C.Y.) STD. 840.72	PIPE REMOVAL LIN. FT.	REMARKS
-L- 43+38	0618																				
	0618	0616																		80	REM 2-18"
-L- 43+38	0645																				
	0645	0618																			
-L- 44+14	0616																				
-L- 44+22 (OUT)	0616	0644																			
-L- 42+00	0624																				
	0624	0620																		56	REM 2-15";1-18"
-L- 42+89	0619					1															
	0619	0620																			
-L- 43+01	0620																				
	0620	0621																		23	REM 12"
-L- 43+74	0621							1				1								15	REM 15"
-L- 44+00	0623																				
	0623	0622																			
-L- 44+01	0622		1	1																	
	0622	0621																			
-L- 47+26	0632					1															
	0632	0631																			
-L- 47+25	0631																				
	0631	0628																			
-L- 46+04	0627					1															
	0627	0628																			
-L- 46+00	0630			1																	
	0630	0629																			
-L- 46+00	0629																				
	0629	0628																			
-L- 46+00	0628																				
	0628	0626																			
-L- 44+35	0626																				
-L- 44+26 (OUT)	0626	0625																			
NOT USED	0633	0634																			
-Y6- 10+71	0635																			6	REM 6' OF EX. 30"
	0635	0636																			
-Y6- 10+78	0636					1															
	0636	0637																		71	REM 15"
-Y6- 11+39	0637																				
	0637	0639																		293	REM 15", 24", & 30"
-L- 48+81(IN)	0638	0639									11										
-L- 48+81	0639							1													
	0639	0640																			
-L- 49+10 (IN)	0643	0640									11										
-L- 49+00	0640																				
	0640	0641																		44	REM 15"
-L- 49+00	0641																				
-L- 49+18 (OUT)	0641	0642																		155	REM 2-30"
-Y7- 13+55	0703			1																	
	0703	0702																			
-Y7- 13+50	0704			1																36	REM 15"
	0704	0702																			
-Y7- 13+96	0702																				
	0702	0701																			
-L- 51+50	0701																				
	0701	0640																			
-L- 53+71	0706					1												0.065		67	REM 18" TO R/W
	0706	0707																			
-L- 54+00	0707																				
	0707	0708																			
SHEET TOTALS			1	4		5		2			22	1						0.065		846	

ABBREVIATIONS

C.B.	CATCH BASIN
N.D.I.	NARROW DROP INLET
D.I.	DROP INLET
G.D.I.	GRATED DROP INLET
G.D.I.(N.S.)	GRATED DROP INLET (NARROW SLOT)
J.B.	JUNCTION BOX
M.H.	MANHOLE
T.B.D.I.	TRAFFIC BEARING DROP INLET
T.B.J.B.	TRAFFIC BEARING JUNCTION BOX

COMPUTED BY: RWP DATE: 2/18/2014

CHECKED BY: RSW DATE: 6/8/2014

Note: Invert Elevations indicated are for Bid Purposes only and shall not be used for project construction stakeout. See "Standard Specifications For Roads and Structures, Section 300-5".

NORTH CAROLINA DEPARTMENT OF TRANSPORTATION
DIVISION OF HIGHWAYS

PROJECT NO. R-2603 | SHEET NO. 3D-4

STATEWIDE
LIST OF PIPES, ENDWALLS, ETC. (FOR PIPES 48 INCHES & UNDER)

STATION / SIZE / THICKNESS OR GAUGE	LOCATION (LT, RT, OR CL)'	STRUCTURE NO. FROM	STRUCTURE NO. TO	TOP ELEVATION	INVERT ELEVATION	INVERT ELEVATION	SLOPE CRITICAL	DRAINAGE PIPE (RCP, CSP, CAAP, HDPE, or PVC) 12"	15"	18"	24"	30"	36"	DO NOT USE RCP	DO NOT USE CSP	DO NOT USE CAAP	DO NOT USE HDPE	C.S. PIPE 15" .064	18" .064	24" .064	36" .079	42" .109	48" .109	R.C. PIPE CLASS III 15"	18"	24"	30"	36"	42"	48"	R.C. PIPE CLASS IV 15"	18"	24"	30"	36"	42"	48"	15" SIDE DRAIN PIPE	18" SIDE DRAIN PIPE	24" SIDE DRAIN PIPE	ENDWALLS STD. 838.01 838.11 OR STD. 838.80 (UNLESS NOTED OTHERWISE) CU. YARDS R.C.P.	C.S.P.	QUANTITIES FOR MASONRY DRAINAGE STRUCTURES *TOTAL L.F. FOR PAY QUANTITY SHALL BE: COL. 'A' + (1.3 X COL. 'B') PER EACH (0' THRU 5.0')	LIN. FT.* A 5.0' THRU 10.0'	B 10.0' AND ABOVE	C.B. STD. 840.01 OR STD. 840.02	FRAME, GRATES, AND HOOD STANDARD 840.03 TYPE OF GRATE E	F	G	CONCRETE TRANSITIONAL SECTION DROP INLET	CATCH BASIN	O.T.C.B. STD. 840.04 OR 840.05	D.I. STD. 840.14 OR 840.15	D.I. FRAME & GRATES STD. 840.16	G.D.I. TYPE "A" STD. 840.17 OR 840.26	G.D.I. TYPE "B" STD. 840.18 OR 840.27	G.D.I. TYPE "D" STD. 840.19 OR 840.28	J.B. STD. 840.31 OR 840.32	T.B.J.B. STD. 840.34	T.B.D.I. STD. 840.35 (FOR CAST IRON FRAME & GRATES)		DRIVEWAY DROP INLET, STD. 840.30				G.D.I. (N.S.) FRAME WITH SAG GRATE STD. 840.24	G.D.I. (N.S.) FRAME WITH TWO SAG GRATES STD. 840.24	G.D.I. (N.S.) FRAME WITH SAG GRATE STD. 840.29	G.D.I. (N.S.) FRAME WITH TWO FLAT GRATES STD. 840.29	FRAME WITH GRATES, DRIVEWAY DROP INLET, STD. 840.30	MANHOLE FRAME AND COVER STD. 840.54	TEMPORARY 1" STEEL COVER (SEE DETAIL ON SHEET 2C-10)	PREFORMED SCOUR HOLE		BERM DRAINAGE OUTLET (SY) STD. 850.10 OR 850.11	CONVERT EXIST. D.I. TO J.B. w / MH (SEE DETAIL ON SHEET 2C-4)			ADJUST EXIST. C.B.	ADJUST EXIST. D.I.	FLOWABLE FILL (CY)	CORR. STEEL PIPE ELBOWS - NO. & SIZE (INCHES)	DRAINAGE PIPE ELBOWS - NO. & SIZE (INCHES)	CONC. & BRICK PIPE PLUG (C.Y.) STD. 840.71	CONC. COLLARS CL. "B" (C.Y.) STD. 840.72	PIPE REMOVAL LIN. FT.	REMARKS
-L- 55+88	RT	0705		1093.9	1091.2																																							1													1														1																			
		0705	0713		1091.2	1087.9			68																																																																																							
-L- 57+30	RT	0714		1091.3	1088.5																																							1													1														1																			
		0714	0713		1088.5	1087.9			80																																																																																							
-L- 56+53	RT	0713		1093.9	1087.9																																							1	1.0												1														1																			
		0713	0708		1087.9	1085.9																	96																																																																									
-L- 56+50	LT	0708		1089.2	1085.9																																							1			1			1																																								
		0708	0711		1085.9	1078.7																	164																																																																									
-L- 58+21	LT	0709		1087.2	1082.2																																							1													1														1																			
		0709	0711		1082.2	1078.7			24					X																																																																																
-L- 58+20	CL	0710		1085.2	1080.2																																							1			1			1		1																																							
		0710	0711		1080.2	1078.7																	36																																																																						80	REM 15"
-L- 58+20	LT	0711		1083.7	1078.7																																							1			1			1																																								
-L- 59+42 (RCBC)	LT	0711	0712		1078.7	1054.0														120																																																																														70	REM 15"
-L- 60+00	LT																																																																																							70	REM 24", 84", 108"
-L- 60+25	LT	0715		1076.9	1071.9																																							1			1			1																																			295.0					FILL 125' OF 108" CMP w/FLOWABLE FILL
-L- 59+52 (RCBC)		0715	0716		1071.9	1055.0											72																																																																																173.0					FILL 95' OF 7'x7' RCBC w/FLOWABLE FILL
-L- 59+67	RT																																																																																			52.0					FILL 22' OF 108" CMP w/FLOWABLE FILL
NOT USED		0717	0718																																																																																		
-L-61+82	CL	0719		1076.0	1073.0																																							1							1			1	1																																			
		0719	0720		1073.0	1070.3																	144																																																																									
-L- 60+40	CL	0720		1078.3	1070.3																																							1	3.0						1			1	1																																			
		0720	0721		1070.3	1069.5																	44																																																																									
-L- 59+58	CL	0721		1079.5	1069.5																																							1	5.0		1			1		1																																							
-L- 59+48 (RCBC)		0721	0722		1069.5	1054.0											52																																																																																			
NOT USED		0723	0726																																																																																		
-Y8- 13+76	LT	0727		1074.6	1071.9																																							1			1		1																																									
-Y8- 13+50 (OUT)	LT	0727	0728		1071.9	1071.8			28																																																																																							
NOT USED		729																																																																																			
-L- 63+03	LT	0730		1075.7	1072.9																																							1													1														1																			
		0730	0731		1072.9	1071.7			28																																																																																							
-L- 63+03	LT	0731		1074.5	1071.7																																							1			1			1																																								
		0731	0805		1071.7	1070.7																	120																																																																									
-L- 61+83	RT	0732		1074.6	1071.8																																							1			1		1																																									
		0732	0733		1071.8	1071.2																	104																																																																									
-L- 62+82	RT	0733		1074.9	1071.2																																							1			1		1																																									
		0733	0815		1071.2	1070.0																	248																																																																									
NOT USED		0801																																																																																			
NOT USED		0803	0804																																																																																		
NOT USED		0813	0814																																																																																		
NOT USED		0817	0818																																																																																		
-L- 65+30	RT	0815		1073.0	1070.0																																							1			1		1																																									
-L- 65+27 (OUT)	RT	0815	0816		1070.0	1068.0																	24																																																																									
-L- 64+24	LT	0805		1073.9	1070.7																																							1			1			1																																								
		0805	0802		1070.7	1068.3																		172																																																																					137	REM 15"
-L- 66+30	LT	0806		1074.5	1071.7																																							1													1														1																		23	REM 12"
		0806	0807		1071.7	1071.0			64																																																																																							
-L- 65+42	LT	0808		1074.3	1071.6																																							1													1														1																			
		0808	0807		1071.6	1071.0			56																																																																																							
-L- 65+98	LT	0807		1074.2	1071.0																																							1													1														1																			
		0807	0802		1071.0	1068.5			32																																																																																							
-L- 65+97	LT	0802		1072.6	1068.3																																							1			1			1																																								
		0802	0809		1068.3	1068.0																		44																																																																								
-L- 65+95	CL	0809		1073.2	1068.0																																							1	0.2		1		1			1																																							
		0809	0811		1068.0	1066.5																		172																																																																								
-L- 67+63	LT	0810		1073.4	1070.6																																							1													1														1																		28	REM 28' OF EX. 15"
		0810	0811		1070.6	1066.5																	64																																																																						51	REM 18"
-L- 67+65	CL	0811		1071.5	1066.5																																							1			1		1			1																																							
		0811	0812		1066.5	1065.4																	56																																																																						34	REM 34' OF EX. 18"
-L- 67+92	RT	0812		1070.4	1065.4																																							1			1		1																																									
SHEET TOTALS										380										124	120					1100	388																				26	9.2		15		7	8	2	4		2	2		9														9												520.0					493	

ABBREVIATIONS

C.B. CATCH BASIN
N.D.I. NARROW DROP INLET
D.I. DROP INLET
G.D.I. GRATED DROP INLET
G.D.I.(N.S.) GRATED DROP INLET (NARROW SLOT)

J.B. JUNCTION BOX
M.H. MANHOLE
T.B.D.I. TRAFFIC BEARING DROP INLET
T.B.J.B. TRAFFIC BEARING JUNCTION BOX

7/2/2015 14:09
R:\Roadway\Proj\R2603_rdy_psh03D-1_thru_3D-12_DrainageSummaries.xls

COMPUTED BY: RWP DATE: 2/18/2014

CHECKED BY: RSW DATE: 6/8/2014

Note: Invert Elevations indicated are for Bid Purposes only and shall not be used for project construction stakeout. See "Standard Specifications For Roads and Structures, Section 300-5".

NORTH CAROLINA DEPARTMENT OF TRANSPORTATION
DIVISION OF HIGHWAYS

STATEWIDE
LIST OF PIPES, ENDWALLS, ETC. (FOR PIPES 48 INCHES & UNDER)

PROJECT NO.	SHEET NO.
R-2603	3D-5

STATION / SIZE / THICKNESS OR GAUGE	LOCATION (LT, RT, OR CL)'	STRUCTURE NO. FROM	STRUCTURE NO. TO	TOP ELEVATION	INVERT ELEVATION	INVERT ELEVATION	SLOPE CRITICAL	DRAINAGE PIPE (RCP, CSP, CAAP, HDPE, or PVC) 12"	15"	18"	24"	30"	36"	DO NOT USE RCP	DO NOT USE CSP	DO NOT USE CAAP	DO NOT USE HDPE
-L- 68+88	LT	0819		1072.6	1068.3												
		0819	0820		1068.3	1067.4											
-L- 69+38	LT	0820		1072.0	1067.2												
		0820	0821		1067.2	1065.9											
-L- 69+25	CL	0821		1070.7	1065.7												
		0821	0822		1065.7	1055.4											
-L- 68+88	RT	0822		1069.4	1055.4												
NOT USED		0823	0824														
-L- 70+50 (IN)	LT	0825	0826		1070.5	1067.6			12					X			
-L- 70+51	LT	0826		1071.2	1067.6												
		0826	0827		1067.6	1066.2											
-L- 70+60	CL	0827		1069.4	1066.2												
		0827	0828		1066.2	1064.1											
-L- 70+85	RT	0828		1067.4	1064.1												
-L- 70+87 (OUT)	RT	0828	0829		1064.1	1062.2				20							
-L- 71+67 (IN)	LT	0830	0831		1071.5	1066.4					16			X			
-L- 71+70	LT	0831		1070.8	1066.4												
		0831	0832		1066.4	1063.1											
-L- 71+73	CL	0832		1067.0	1063.1												
		0832	0833		1063.1	1061.1											
-L- 72+47	CL	0833		1066.6	1061.1												
		0833	0834		1061.1	1058.8											
-L- 75+00	CL	0834		1063.8	1058.8												
		0834	0835		1058.8	1056.2											
-L- 77+00	CL	0835		1061.2	1056.2												
		0835	0913		1056.2	1047.3											
-L- 74+00	LT	0843															
-L- 75+98	LT	0836															
-L- 76+57	LT	0837															
NOT USED		0838	0840														
-L- 74+85	RT	0841		1062.4	1059.4												
-L- 74+87 (OUT)	RT	0841	0842		1059.4	1055.8			40								
-L- 77+00	RT	0844		1059.6	1056.6												
-L- 77+04 (OUT)	RT	0844	0845		1056.6	1047.2			44					X			
-L- 78+04 (IN)	LT	0901	0903		1057.5	1050.0					92						
-L- 78+92 (IN)	LT	0902	0903		1045.9	1044.4											
-L- 78+92	LT	0903		1059.5	1044.4												
NOT USED		0904															
-L- 78+50	CL	0913		1059.3	1047.3												
		0913	0914		1047.3	1043.9											
-L- 78+90	CL	0914		1058.1	1043.9												
-L- 78+78 (OUT)	RT	0914	0916		1043.9	1042.3											
-L- 79+70	LT	0905		1058.7	1055.7												
		0905	0907		1055.7	1053.4			84								
-L- 81+56	LT	0906		1058.7	1055.3												
		0906	0907		1055.3	1053.4			108								
-L- 80+51	LT	0907		1057.9	1053.4												
		0907	0911		1053.4	1050.5											
NOT USED		0908															
-L- 81+96	LT	0909		1054.7	1052.0												
		0909	0910		1052.0	1051.5											
-L- 81+85	CL	0910		1054.8	1051.5												
		0910	0911		1051.5	1051.5											
-L- 80+50	CL	0911		1056.7	1050.5												
		0911	0912		1050.5	1050.1											
SHEET TOTALS									288	20	108						

STATION	C.S. PIPE 15" .064	18" .064	24" .064	36" .079	42" .109	48" .109	R.C. PIPE CLASS III 15"	18"	24"	30"	36"	42"	48"	R.C. PIPE CLASS IV 15"	18"	24"	30"	36"	42"	48"	15" SIDE DRAIN PIPE	18" SIDE DRAIN PIPE	24" SIDE DRAIN PIPE
-L- 68+88																							
								52															
-L- 69+38																							
									64														
-L- 69+25																							
									64														
-L- 68+88																							
NOT USED																							
-L- 70+50 (IN)																							
-L- 70+51																							
							48																
-L- 70+60																							
							56																
-L- 70+85																							
-L- 70+87 (OUT)																							
-L- 71+67 (IN)																							
-L- 71+70																							
									80														
-L- 71+73																							
									76														
-L- 72+47																							
									256														
-L- 75+00																							
									200														
-L- 77+00																							
									152														
-L- 74+00																					28		
-L- 75+98																						24	
-L- 76+57																						56	
NOT USED																							
-L- 74+85																							
-L- 74+87 (OUT)																							
-L- 77+00																							
-L- 77+04 (OUT)																							
-L- 78+04 (IN)																							
-L- 78+92 (IN)													24										
-L- 78+92																							
NOT USED																							
-L- 78+50																							
									44														
-L- 78+90																							
-L- 78+78 (OUT)													60										
-L- 79+70																							
-L- 81+56																							
-L- 80+51																							
							64																
NOT USED																							
-L- 81+96																							
							48																
-L- 81+85																							
							136																
-L- 80+50																							
								48															
SHEET TOTALS							352	100	936				84								28	80	

STATION	ENDWALLS STD. 838.01 838.11 OR STD. 838.80 (UNLESS NOTED OTHERWISE) CU. YARDS R.C.P.	C.S.P.	QUANTITIES FOR MASONRY DRAINAGE STRUCTURES *TOTAL L.F. FOR PAY QUANTITY SHALL BE: COL. 'A' + (1.3 X COL. 'B') PER EACH (0' THRU 5.0')	LIN. FT.* A 5.0' THRU 10.0'	B 10.0' AND ABOVE	C.B. STD. 840.01 OR STD. 840.02	FRAME, GRATES, AND HOOD STANDARD 840.03 TYPE OF GRATE E	F	G	CONCRETE TRANSITIONAL SECTION DROP INLET	CATCH BASIN	O.T.C.B. STD. 840.04 OR 840.05	D.I. STD. 840.14 OR 840.15	D.I. FRAME & GRATES STD. 840.16	G.D.I. TYPE "A" STD. 840.17 OR 840.26	G.D.I. TYPE "B" STD. 840.18 OR 840.27	G.D.I. TYPE "D" STD. 840.19 OR 840.28	J.B. STD. 840.31 OR 840.32	T.B.J.B. STD. 840.34	T.B.D.I. STD. 840.35 (FOR CAST IRON FRAME & GRATES)		DRIVEWAY DROP INLET, STD. 840.30
-L- 68+88			1												1							
-L- 69+38			1												1							
-L- 69+25			1			1		1			1											
-L- 68+88			1	5.0	4.0	1		1														
NOT USED																						
-L- 70+50 (IN)																						
-L- 70+51			1															1				
-L- 70+60			1							1			1	1								
-L- 70+85			1			1		1														
-L- 70+87 (OUT)																						
-L- 71+67 (IN)																						
-L- 71+70			1															1				
-L- 71+73			1							1			1	1								
-L- 72+47			1	0.5						1			1	1								
-L- 75+00			1			1		1			1											
-L- 77+00			1			1		1			1											
-L- 74+00																						
-L- 75+98																						
-L- 76+57																						
NOT USED																						
-L- 74+85			1			1		1														
-L- 74+87 (OUT)																						
-L- 77+00			1			1		1														
-L- 77+04 (OUT)																						
-L- 78+04 (IN)																						
-L- 78+92 (IN)	6.0																					
-L- 78+92			1	5.0	5.1													1				
NOT USED																						
-L- 78+50			1	5.0	2.0	1		1			1											
-L- 78+90			1	5.0	4.2	1			1		1											
-L- 78+78 (OUT)	8.0																					
-L- 79+70			1													1						
-L- 81+56			1													1						
-L- 80+51			1													1						
NOT USED																						
-L- 81+96			1													1						
-L- 81+85			1			1		1			1											
-L- 80+50			1	1.2		1		1			1											
SHEET TOTALS	14.0		23	21.7	15.3	11		10	1	3	7		3	3	2	4		3				

STATION				G.D.I. (N.S.) FRAME WITH SAG GRATE STD. 840.24	G.D.I. (N.S.) FRAME WITH TWO SAG GRATES STD. 840.24	G.D.I. (N.S.) FRAME WITH SAG GRATE STD. 840.29	G.D.I. (N.S.) FRAME WITH TWO FLAT GRATES STD. 840.29	FRAME WITH GRATES, DRIVEWAY DROP INLET, STD. 840.30	MANHOLE FRAME AND COVER STD. 840.54	TEMPORARY 1" STEEL COVER (SEE DETAIL ON SHEET 2C-10)	PREFORMED SCOUR HOLE		BERM DRAINAGE OUTLET (SY) STD. 850.10 OR 850.11	CONVERT EXIST. D.I. TO J.B. w / MH (SEE DETAIL ON SHEET 2C-4)			ADJUST EXIST. C.B.	ADJUST EXIST. D.I.	FLOWABLE FILL (CY)	CORR. STEEL PIPE ELBOWS - NO. & SIZE (INCHES)	DRAINAGE PIPE ELBOWS - NO. & SIZE (INCHES)	CONC. & BRICK PIPE PLUG (C.Y.) STD. 840.71	CONC. COLLARS CL. "B" (C.Y.) STD. 840.72	PIPE REMOVAL LIN. FT.	REMARKS
-L- 68+88						1	1																		
-L- 69+38						1	1																		
-L- 69+25																									
																								92	REM 92' OF EX. 24"
-L- 68+88																									
NOT USED																									
-L- 70+50 (IN)													11												
-L- 70+51									1																
-L- 70+60																									
																								28	REM 15"
-L- 70+85																									
-L- 70+87 (OUT)																									
-L- 71+67 (IN)													31												
-L- 71+70									1																
-L- 71+73																									
-L- 72+47																								30	REM 15"
																								30	REM 15"
-L- 75+00																								29	REM 12"
-L- 77+00																									
-L- 74+00																									
-L- 75+98																									
-L- 76+57																								60	REM 15"
NOT USED																									
-L- 74+85																									
-L- 74+87 (OUT)																								22	REM 12"
-L- 77+00																									
-L- 77+04 (OUT)																									
-L- 78+04 (IN)																								79	REM 2-15"
-L- 78+92 (IN)																									
-L- 78+92									1																SPECIAL JB (SEE DETAIL, SHT. 2C-5)
NOT USED																									
-L- 78+50																									
-L- 78+90																									SPECIAL CB (SEE DETAIL, SHT. 2C-6)
-L- 78+78 (OUT)																									SPECIAL HW (SEE SHEET 2C-7)
-L- 79+70							1																		
-L- 81+56							1																		
-L- 80+51							1																		
NOT USED																									
-L- 81+96					1																				
-L- 81+85																									
-L- 80+50																									
SHEET TOTALS					1	2	5		3				42											370	

ABBREVIATIONS

C.B.	CATCH BASIN
N.D.I.	NARROW DROP INLET
D.I.	DROP INLET
G.D.I.	GRATED DROP INLET
G.D.I.(N.S.)	GRATED DROP INLET (NARROW SLOT)
J.B.	JUNCTION BOX
M.H.	MANHOLE
T.B.D.I.	TRAFFIC BEARING DROP INLET
T.B.J.B.	TRAFFIC BEARING JUNCTION BOX

7/2/2015 14:09
R:\Roadway\Proj\R2603_rdy_psh03D-1_thru_3D-12_DrainageSummaries.xls

COMPUTED BY: RWP DATE: 2/18/2014

CHECKED BY: RSW DATE: 6/8/2014

Note: Invert Elevations indicated are for Bid Purposes only and shall not be used for project construction stakeout. See "Standard Specifications For Roads and Structures, Section 300-5".

NORTH CAROLINA DEPARTMENT OF TRANSPORTATION
DIVISION OF HIGHWAYS

STATEWIDE
LIST OF PIPES, ENDWALLS, ETC. (FOR PIPES 48 INCHES & UNDER)

PROJECT NO.: R-2603 SHEET NO.: 3D-6

STATION / SIZE / THICKNESS OR GAUGE	LOCATION (LT, RT, OR CL)'	STRUCTURE NO. FROM	STRUCTURE NO. TO	TOP ELEVATION	INVERT ELEVATION	INVERT ELEVATION	SLOPE CRITICAL	DRAINAGE PIPE (RCP, CSP, CAAP, HDPE, or PVC) 12"	15"	18"	24"	30"	36"	DO NOT USE RCP	DO NOT USE CSP	DO NOT USE CAAP	DO NOT USE HDPE	C.S. PIPE 15" .064	18" .064	24" .064	36" .079	42" .109	48" .109	R.C. PIPE CLASS III 15"	18"	24"	30"	36"	42"	48"	R.C. PIPE CLASS IV 15"	18"	24"	30"	36"	42"	48"	15" SIDE DRAIN PIPE	18" SIDE DRAIN PIPE	24" SIDE DRAIN PIPE	ENDWALLS STD. 838.01 838.11 OR STD. 838.80 (UNLESS NOTED OTHERWISE) CU. YARDS R.C.P.	C.S.P.	QUANTITIES FOR MASONRY DRAINAGE STRUCTURES *TOTAL L.F. FOR PAY QUANTITY SHALL BE: COL. 'A' + (1.3 X COL. 'B') PER EACH (0' THRU 5.0')	LIN. FT.* A 5.0' THRU 10.0'	LIN. FT.* B 10.0' AND ABOVE	C.B. STD. 840.01 OR STD. 840.02	FRAME, GRATES, AND HOOD STANDARD 840.03 TYPE OF GRATE E	F	G	CONCRETE TRANSITIONAL SECTION DROP INLET	CATCH BASIN	O.T.C.B. STD. 840.04 OR 840.05	D.I. STD. 840.14 OR 840.15	D.I. FRAME & GRATES STD. 840.16	G.D.I. TYPE "A" STD. 840.17 OR 840.26	G.D.I. TYPE "B" STD. 840.18 OR 840.27	G.D.I. TYPE "D" STD. 840.19 OR 840.28	J.B. STD. 840.31 OR 840.32	T.B.J.B. STD. 840.34	T.B.D.I. STD. 840.35 (FOR CAST IRON FRAME & GRATES)		DRIVEWAY DROP INLET, STD. 840.30				G.D.I. (N.S.) FRAME WITH SAG GRATE STD. 840.24	G.D.I. (N.S.) FRAME WITH TWO SAG GRATES STD. 840.24	G.D.I. (N.S.) FRAME WITH SAG GRATE STD. 840.29	G.D.I. (N.S.) FRAME WITH TWO FLAT GRATES STD. 840.29	FRAME WITH GRATES, DRIVEWAY DROP INLET, STD. 840.30	MANHOLE FRAME AND COVER STD. 840.54	TEMPORARY 1" STEEL COVER (SEE DETAIL ON SHEET 2C-10)	PREFORMED SCOUR HOLE		BERM DRAINAGE OUTLET (SY) STD. 850.10 OR 850.11	CONVERT EXIST. D.I. TO J.B. w / MH (SEE DETAIL ON SHEET 2C-4)			ADJUST EXIST. C.B.	ADJUST EXIST. D.I.	FLOWABLE FILL (CY)	CORR. STEEL PIPE ELBOWS - NO. & SIZE (INCHES)	DRAINAGE PIPE ELBOWS - NO. & SIZE (INCHES)	CONC. & BRICK PIPE PLUG (C.Y.) STD. 840.71	CONC. COLLARS CL. "B" (C.Y.) STD. 840.72	PIPE REMOVAL LIN. FT.	REMARKS
-L- 80+50	RT	0912		1055.1	1050.1																																						1			1		1																																					
		0912	0915		1050.1	1047.3																			160																																																														
-L- 78+90	RT	0915		1057.3	1047.3																																						1	5.0		1		1																																					
-L- 78+81 (OUT)	RT	0915	0917		1047.3	1044.0				28				X																											SEE REMARK																																														SAME SPECIAL HW AS 0916 (SEE SHEET 3D-5)
NOT USED		0918	0919																																																																																				
-L- 83+51 (IN)	LT	0920	0921		1059.9	1049.2			20					X																																																															11												
-L- 83+50	LT	0921		1052.2	1049.2																																						1													1											1																				
		0921	0922		1049.2	1048.7			16																																																																																
-L- 83+50	LT	0922		1052.2	1048.7																																						1			1			1																																							
		0922	0924		1048.7	1048.2																		100																																																																48	REM 15"
-L- 84+50	LT	0923		1051.4	1048.4																																						1													1											1																				
		0923	0924		1048.4	1048.2			16																																																																																
-L- 84+50	LT	0924		1051.4	1048.2																																						1			1			1																																						41	REM 2-15"
		0924	0926		1048.2	1047.2																		136																																																																34	REM 15"
-L- 85+82 (IN)	LT	0925	0926		1047.5	1047.2					24																																																																			31												
-L- 85+85	LT	0926		1050.7	1047.2																																						1			1			1																																							
		0926	0967		1047.2	1046.6																				104																																																												74	REM 24"
-L- 86+90	LT	0967		1050.3	1046.6																																						1			1			1																																							
		0967	0929		1046.6	1046.2																				60																																																												68	REM 24"
-L- 86+82	LT	0927		1050.4	1047.7																																						1													1													1																		
		0927	0928		1047.7	1047.1			68																																																																																
-L- 87+51	LT	0928		1050.1	1047.1																																						1													1													1																		
		0928	0929		1047.1	1046.2			32																																																																																
-L- 87+50	LT	0929		1050.2	1046.2																																						1			1			1																																						43	REM 15"
		0929	0931		1046.2	1045.6																				72																																																													
-L- 88+07	LT	0930		1050.6	1047.8																																						1													1													1																		
		0930	0931		1047.8	45.6			36																																																																																
-L- 88+23	LT	0931		1050.3	1045.6																																						1			1	1																																									
		0931	0957		1045.6	1044.8																				92																																																													
-Y9- 12+10	RT	0932																																				28																																																					
-Y9- 12+46	RT	0933																																				28																																																				
NOT USED		0934																																																																																									
-Y9- 10+90	RT	0935		1055.0	1051.3																																						1													1											1																				
		0935	0937		1051.3	1051.2																		48																																																																	
-Y9- 12+00	LT	0936		1059.8	1057.1																																						1													1											1																				
		0936	0937		1057.1	1051.2			112																																																																																	
-Y9- 10+90	LT	0937		1054.5	1051.2																																						1													1											1																				
		0937	0938		1051.2	1051.0			56																																																																																	
-L- 81+54	RT	0938		1054.2	1052.0																																						1			1		1																																					
		0938	0941		1052.0	1050.6																		44																																																																	
-L- 81+98 (IN)	RT	0939	0941		1059.4	1050.6			36					X																																																															11								2 @ 15				
NOT USED		0940																																																																																								
-L- 82+00	RT	0941		1053.9	1050.6																																						1			1		1																																					
		0941	0965		1050.6	1048.8																		156																																																																	
-DRIVE7- 10+60	RT	0948		1054.2	1051.4																																																																																					
		0948	0949		1051.4	1051.1			24																																																																																
-DRIVE7- 10+60	LT	0949		1054.1	1051.1																																																																																				
		0949	0965		1051.1	1048.8			24																																																																																	
-L- 83+55	RT	0965		1052.3	1048.8																																						1			1		1																																					
		0965	0944		1048.8	1047.2																		180																																																																	
-L- 85+32 (IN)	RT	0942	0943		1059.2	1047.7			28																																																																					11												
-L- 85+35	RT	0943		1051.6	1048.8																																						1															1													1																
		0943	0944		1048.8	1047.2			8																																																																																	
-L- 85+35	RT	0944		1050.9	1047.2																																						1			1		1																																					
		0944	0966		1047.2	1046.4																			124																																																															
-L- 86+60	RT	0966		1050.4	1046.4																																						1			1		1																																					
		0966	0946		1046.4	1045.8																			64																																																															
-L- 87+25 (IN)	RT	0945	0946		1047.8	1045.8			28																																																																																
-L- 87+25	RT	0946		1050.3	1045.8																																						1			1		1																																					27	REM 18"
		0946	0947		1045.8	1045.2																			96																																																														170	REM 15"
-L- 88+23	RT	0947		1050.2	1045.2																																						1			1	1																																									
		0947	0959		1045.2	1044.0																			96																																																															
-Y10- 11+56	LT	0963		1056.7	1052.7																																						1													1											1																				
		0963	0951		1053.7	1049.0																		64																																																																65	REM 18"
-Y10- 12+19	RT	0950		1052.4	1049.7																																						1													1											1																				
		0950	0951		1049.7	1049.0																		56																																																																38	REM 15"
SHEET TOTALS									504	28	24													784	540	328												56					26	5.0		15	2	8	5							10		1										7		3		1				64								2 @ 15			608	

ABBREVIATIONS

C.B. CATCH BASIN
N.D.I. NARROW DROP INLET
D.I. DROP INLET
G.D.I. GRATED DROP INLET
G.D.I.(N.S.) GRATED DROP INLET (NARROW SLOT)

J.B. JUNCTION BOX
M.H. MANHOLE
T.B.D.I. TRAFFIC BEARING DROP INLET
T.B.J.B. TRAFFIC BEARING JUNCTION BOX

7/2/2015 14:09
R:\Roadway\Proj\R2603_rdy_psh03D-1_thru_3D-12_DrainageSummaries.xls

COMPUTED BY: RWP DATE: 2/18/2014

CHECKED BY: RSW DATE: 6/8/2014

Note: Invert Elevations indicated are for Bid Purposes only and shall not be used for project construction stakeout. See "Standard Specifications For Roads and Structures, Section 300-5".

NORTH CAROLINA DEPARTMENT OF TRANSPORTATION
DIVISION OF HIGHWAYS

PROJECT NO.	SHEET NO.
R-2603	3D-7

STATEWIDE
LIST OF PIPES, ENDWALLS, ETC. (FOR PIPES 48 INCHES & UNDER)

STATION	LOCATION (LT, RT, OR CL)'	STRUCTURE NO. FROM	STRUCTURE NO. TO	TOP ELEVATION	INVERT ELEVATION	INVERT ELEVATION	SLOPE CRITICAL	DRAINAGE PIPE (RCP, CSP, CAAP, HDPE, or PVC) 12"	15"	18"	24"	30"	36"	DO NOT USE RCP	DO NOT USE CSP	DO NOT USE CAAP	DO NOT USE HDPE	C.S. PIPE 15" .064	18" .064	24" .064	36" .079	42" .109	48" .109
-Y10- 12+17	LT	0951		1053.5	1049.0																		
		0951	0952		1049.0	1047.1			44														
-L- 91+83	LT	0952		1052.1	1047.1																		
		0952	0953		1047.1	1046.1			24														
-L- 91+75	LT	0953		1051.1	1046.1																		
		0953	0955		1046.1	1045.5																	
-L- 90+01	LT	0954		1050.5	1046.2																		
		0954	0955		1046.2	1045.5			16														
-L- 90+00	LT	0955		1050.5	1045.5																		
		0955	0957		1045.5	1044.8																	
-L- 89+17	LT	0956		1050.6	1046.3																		
		0956	0957		1046.3	1044.8																	
-L- 89+15	LT	0957		1050.3	1044.8																		
		0957	0959		1044.8	1044.0																	
-L- 91+19	RT	0964		1051.0	1048.0																		
		0964	0968		1048.0	1047.9			12														
-L- 91+18	RT	0968		1050.9	1047.9																		
		0968	0958		1047.9	1047.6																	
-L- 90+50	RT	0958		1050.6	1047.6																		
		0958	0959		1047.6	1045.8																	
-L- 89+20	RT	0959		1050.3	1044.8																		
-L- 89+14 (OUT)	RT	0959	0960		1044.8	1042.0							28										
NOT USED		1001	1004																				
-L- 93+53	LT	1005		1052.7	1049.9																		
		1005	1006		1049.9	1047.7			24														
-L- 93+50	LT	1006		1051.7	1047.7																		
		1006	0953		1047.7	1047.2																	
NOT USED		1007																					
-DRIVE8- 10+88	CL	1008																					
-L- 93+50	RT	1009		1051.7	1048.8																		
		1009	1011		1048.7	1048.8																	
-L- 94+75	LT	1010		1052.1	1049.1																		
		1010	1011		1049.1	1048.8																	
-L- 94+75	RT	1011		1052.1	1048.8																		
		1011	1012		1048.8	1048.2																	
-L- 95+60	RT	1012		1052.4	1048.2																		
-L- 95+70 (OUT)	LT	1012	1028		1048.2	1047.8																	
-L- 96+70	RT	1013		1052.9	1049.4																		
		1013	1014		1049.9	1048.7																	
-L- 96+56	LT	1014		1052.9	1048.7																		
-L- 96+56 (OUT)	LT	1014	1017		1048.7	1047.3																	
-L- 96+78 (IN)	LT	1015	1016		1045.4	1024.8															172		
-L- 96+85	RT	1016		1030.0	1024.8																		
-L- 96+85	RT																						
-L- 98+38	LT	1018		1053.4	1050.1																		
-L- 98+26 (OUT)	LT	1018	1019		1050.1	1048.7			24														
-L- 101+00	LT	1020		1053.7	1050.7																		
		1020	1021		1050.7	1046.7																	
-L- 103+00	LT	1021		1049.7	1046.7																		
		1021	1105		1046.7	1029.0																	
-L- 95+41	LT	1022																					
-Y11- 13+31	CL	1023	1019		1050.5	1048.7																	
-DRIVE6- 12+65	CL	1029	1030		1031.3	1023.5																	
-L- 101+50	RT	1024		1051.4	1048.4																		
		1024	1025		1048.4	1042.5																	
-L- 103+65 (IN)	RT	1027	1026		1055.2	1043.3			28					X									
-L- 103+65	RT	1026		1047.0	1043.0																		
		1026	1025		1043.0	1042.5			8														
-L- 103+65	RT	1025		1046.2	1042.5																		
		1025	1104		1042.5	1034.8																	
SHEET TOTALS									180				28								172		

STATION	FROM	TO	R.C. PIPE CLASS III 15"	18"	24"	30"	36"	42"	48"	R.C. PIPE CLASS IV 15"	18"	24"	30"	36"	42"	48"	15" SIDE DRAIN PIPE	18" SIDE DRAIN PIPE	24" SIDE DRAIN PIPE	ENDWALLS STD. 838.01 838.11 OR STD. 838.80 (UNLESS NOTED OTHERWISE) CU. YARDS R.C.P.	C.S.P.
-Y10- 12+17	0951																				
	0951	0952																			
-L- 91+83	0952																				
	0952	0953																			
-L- 91+75	0953																				
	0953	0955		176																	
-L- 90+01	0954																				
	0954	0955																			
-L- 90+00	0955																				
	0955	0957			84																
-L- 89+17	0956																				
	0956	0957			36																
-L- 89+15	0957																				
	0957	0959				80															
-L- 91+19	0964																				
	0964	0968																			
-L- 91+18	0968																				
	0968	0958	68																		
-L- 90+50	0958																				
	0958	0959	132																		
-L- 89+20	0959																				
-L- 89+14 (OUT)	0959	0960																			
NOT USED	1001	1004																			
-L- 93+53	1005																				
	1005	1006																			
-L- 93+50	1006																				
	1006	0953	176																		
NOT USED	1007																				
-DRIVE8- 10+88	1008			56																	
-L- 93+50	1009																				
	1009	1011	124																		
-L- 94+75	1010																				
	1010	1011	80																		
-L- 94+75	1011																				
	1011	1012	84																		
-L- 95+60	1012																				
-L- 95+70 (OUT)	1012	1028	108																		
-L- 96+70	1013																				
	1013	1014	80																		
-L- 96+56	1014																				
-L- 96+56 (OUT)	1014	1017								32											
-L- 96+78 (IN)	1015	1016																			2.0
-L- 96+85	1016																				
-L- 96+85																					
-L- 98+38	1018																				
-L- 98+26 (OUT)	1018	1019																			
-L- 101+00	1020																				
	1020	1021	200																		
-L- 103+00	1021																				
	1021	1105	228																		
-L- 95+41	1022																	40				
-Y11- 13+31	1023	1019		104																	
-DRIVE6- 12+65	1029	1030		64																	
-L- 101+50	1024																				
	1024	1025	216																		
-L- 103+65 (IN)	1027	1026																			
-L- 103+65	1026																				
	1026	1025																			
-L- 103+65	1025																				
	1025	1104	188																		
SHEET TOTALS			1684	400	120	80				32							40				2.0

STATION	FROM	TO	QUANTITIES FOR MASONRY DRAINAGE STRUCTURES *TOTAL L.F. FOR PAY QUANTITY SHALL BE: COL. 'A' + (1.3 X COL. 'B') PER EACH (0' THRU 5.0')	LIN. FT.* A 5.0' THRU 10.0'	B 10.0' AND ABOVE	C.B. STD. 840.01 OR STD. 840.02	FRAME, GRATES, AND HOOD STANDARD 840.03 TYPE OF GRATE E	F	G	CONCRETE TRANSITIONAL SECTION DROP INLET	CATCH BASIN	O.T.C.B. STD. 840.04 OR 840.05	D.I. STD. 840.14 OR 840.15	D.I. FRAME & GRATES STD. 840.16	G.D.I. TYPE "A" STD. 840.17 OR 840.26	G.D.I. TYPE "B" STD. 840.18 OR 840.27	G.D.I. TYPE "D" STD. 840.19 OR 840.28	J.B. STD. 840.31 OR 840.32	T.B.J.B. STD. 840.34	T.B.D.I. STD. 840.35 (FOR CAST IRON FRAME & GRATES)		DRIVEWAY DROP INLET, STD. 840.30
-Y10- 12+17	0951		1													1						
	0951	0952																				
-L- 91+83	0952		1													1						
	0952	0953																				
-L- 91+75	0953		1			1		1														
	0953	0955																				
-L- 90+01	0954		1										1	1								
	0954	0955																				
-L- 90+00	0955		1			1		1														
	0955	0957																				
-L- 89+17	0956		1										1	1								
	0956	0957																				
-L- 89+15	0957		1	0.5		1		1														
	0957	0959																				
-L- 91+19	0964		1													1						
	0964	0968																				
-L- 91+18	0968		1			1			1													
	0968	0958																				
-L- 90+50	0958		1			1			1													
	0958	0959																				
-L- 89+20	0959		1	0.5		1			1													
-L- 89+14 (OUT)	0959	0960																				
NOT USED	1001	1004																				
-L- 93+53	1005		1													1						
	1005	1006																				
-L- 93+50	1006		1			1		1														
	1006	0953																				
NOT USED	1007																					
-DRIVE8- 10+88	1008																					
-L- 93+50	1009		1			1			1													
	1009	1011																				
-L- 94+75	1010		1			1		1														
	1010	1011																				
-L- 94+75	1011		1			1			1													
	1011	1012																				
-L- 95+60	1012		1			1			1													
-L- 95+70 (OUT)	1012	1028																				
-L- 96+70	1013		1			1			1													
	1013	1014																				
-L- 96+56	1014		1			1		1														
-L- 96+56 (OUT)	1014	1017																				
-L- 96+78 (IN)	1015	1016																				
-L- 96+85	1016		1	0.2								1										
-L- 96+85																						
-L- 98+38	1018		1			1	1															
-L- 98+26 (OUT)	1018	1019																				
-L- 101+00	1020		1			1			1													
	1020	1021																				
-L- 103+00	1021		1			1			1													
	1021	1105																				
-L- 95+41	1022																					
-Y11- 13+31	1023	1019																				
-DRIVE6- 12+65	1029	1030																				
-L- 101+50	1024		1			1		1														
	1024	1025																				
-L- 103+65 (IN)	1027	1026																				
-L- 103+65	1026		1															1				
	1026	1025																				
-L- 103+65	1025		1			1		1														
	1025	1104																				
SHEET TOTALS			26	1.2		18	1	8	9			1	2	2		4		1				

STATION	FROM	TO				G.D.I. (N.S.) FRAME WITH SAG GRATE STD. 840.24	G.D.I. (N.S.) FRAME WITH TWO SAG GRATES STD. 840.24	G.D.I. (N.S.) FRAME WITH SAG GRATE STD. 840.29	G.D.I. (N.S.) FRAME WITH TWO FLAT GRATES STD. 840.29	FRAME WITH GRATES, DRIVEWAY DROP INLET, STD. 840.30	MANHOLE FRAME AND COVER STD. 840.54	TEMPORARY 1" STEEL COVER (SEE DETAIL ON SHEET 2C-10)	PREFORMED SCOUR HOLE		BERM DRAINAGE OUTLET (SY) STD. 850.10 OR 850.11	CONVERT EXIST. D.I. TO J.B. w / MH (SEE DETAIL ON SHEET 2C-4)			ADJUST EXIST. C.B.	ADJUST EXIST. D.I.	FLOWABLE FILL (CY)	CORR. STEEL PIPE ELBOWS - NO. & SIZE (INCHES)	DRAINAGE PIPE ELBOWS - NO. & SIZE (INCHES)	CONC. & BRICK PIPE PLUG (C.Y.) STD. 840.71	CONC. COLLARS CL. "B" (C.Y.) STD. 840.72	PIPE REMOVAL LIN. FT.	REMARKS
-Y10- 12+17	0951						1																				
	0951	0952																									
-L- 91+83	0952						1																				
	0952	0953																									
-L- 91+75	0953																									43	REM 18"
	0953	0955																								50	REM 18"
-L- 90+01	0954																										
	0954	0955																									
-L- 90+00	0955																										
	0955	0957																								127	REM 18"
-L- 89+17	0956																										
	0956	0957																								26	REM 26' OF EX. 24"
-L- 89+15	0957																										
	0957	0959																								51	REM 30"
-L- 91+19	0964						1																				
	0964	0968																									
-L- 91+18	0968																										
	0968	0958																									
-L- 90+50	0958																										
	0958	0959																									
-L- 89+20	0959																										
-L- 89+14 (OUT)	0959	0960																									
NOT USED	1001	1004																									
-L- 93+53	1005								1																		
	1005	1006																									
-L- 93+50	1006																										
	1006	0953																									
NOT USED	1007																										
-DRIVE8- 10+88	1008																										
-L- 93+50	1009																										
	1009	1011																									
-L- 94+75	1010																										
	1010	1011																									
-L- 94+75	1011																										
	1011	1012																									
-L- 95+60	1012																										
-L- 95+70 (OUT)	1012	1028																									
-L- 96+70	1013																										
	1013	1014																								101	REM 30"
-L- 96+56	1014																										
-L- 96+56 (OUT)	1014	1017																									
-L- 96+78 (IN)	1015	1016																									
-L- 96+85	1016																										O.T.C.B. (4 SIDES OPEN)
-L- 96+85																										6	REM 6' OF EX. 18"
-L- 98+38	1018																										
-L- 98+26 (OUT)	1018	1019																									
-L- 101+00	1020																										
	1020	1021																									
-L- 103+00	1021																										
	1021	1105																									
-L- 95+41	1022																									40	REM 15"
-Y11- 13+31	1023	1019																								71	REM 18"
-DRIVE6- 12+65	1029	1030																									TIE TO EXIST. CB
-L- 101+50	1024																										
	1024	1025																									
-L- 103+65 (IN)	1027	1026														11											
-L- 103+65	1026										1																
	1026	1025																									
-L- 103+65	1025																										
	1025	1104																									
SHEET TOTALS							3		1		1				11											515	

ABBREVIATIONS

C.B.	CATCH BASIN
N.D.I.	NARROW DROP INLET
D.I.	DROP INLET
G.D.I.	GRATED DROP INLET
G.D.I.(N.S.)	GRATED DROP INLET (NARROW SLOT)
J.B.	JUNCTION BOX
M.H.	MANHOLE
T.B.D.I.	TRAFFIC BEARING DROP INLET
T.B.J.B.	TRAFFIC BEARING JUNCTION BOX

7/2/2015 14:09
R:\Roadway\Proj\R2603_rdy_psh03D-1_thru_3D-12_DrainageSummaries.xls

COMPUTED BY: RWP DATE: 2/18/2014

CHECKED BY: RSW DATE: 6/8/2014

Note: Invert Elevations indicated are for Bid Purposes only and shall not be used for project construction stakeout. See "Standard Specifications For Roads and Structures, Section 300-5".

NORTH CAROLINA DEPARTMENT OF TRANSPORTATION
DIVISION OF HIGHWAYS

STATEWIDE

LIST OF PIPES, ENDWALLS, ETC. (FOR PIPES 48 INCHES & UNDER)

PROJECT NO.	SHEET NO.
R-2603	3D-8

STATION	SIZE / THICKNESS OR GAUGE	LOCATION (LT, RT, OR CL)	STRUCTURE NO. FROM	STRUCTURE NO. TO	TOP ELEVATION	INVERT ELEVATION	INVERT ELEVATION	SLOPE CRITICAL	DRAINAGE PIPE (RCP, CSP, CAAP, HDPE, or PVC) 12"	15"	18"	24"	30"	36"	DO NOT USE RCP	DO NOT USE CSP	DO NOT USE CAAP	DO NOT USE HDPE	C.S. PIPE 15" .064	18" .064	24" .064	36" .079	42" .109	48" .109	R.C. PIPE CLASS III 15"	18"	24"	30"	36"	42"	48"	R.C. PIPE CLASS IV 15"	18"	24"	30"	36"	42"	48"
-Y12- 10+90		RT	1101		1044.4	1040.0																																	
			1101	1104		1040.0	1034.8				64																												
-L- 105+40 (IN)		RT	1102	1103		1041.4	1035.4				20				X																								
-L- 105+42		RT	1103		1039.4	1035.4																																	
			1103	1104		1035.4	1034.8				12																												
-L- 105+53		RT	1104		1039.1	1034.8																																	
			1104	1105		1034.8	1034.0																			104													
-L- 105+26		LT	1105		1042.2	1034.0																																	
-L- 105+50 (OUT)		LT	1105	1106		1034.0	1033.0					32																											
-Y12- 13+54		RT	1107						52																														
-L- 108+05		CL	1108																									184											
-L- 111+48 (IN)		LT	1110	1111		1009.3	1005.8						20		X																								
-L- 111+48		LT	1111		1009.8	1005.8																																	
-L- 111+45 (OUT)		RT	1111	1109		1005.8	1004.7																																
-L- 111+63		RT	1112											36														120											
-DRIVE3- 10+24		CL	1113																																				
-Y12- 12+50		RT	1114						52																														
-Y12- 12+52		RT	1115																																				
-Y12- 13+55		RT	1116																																				
-L- 116+26		LT	1117		999.5	994.5																																	
-L- 116+35 (OUT)		LT	1117	1118		994.5	992.4			32																													
-L- 113+51		RT	1119																									52											
-L- 116+25		RT	1121																																				
-L- 116+25 (OUT)		RT	1121	1120						36					X																								
NOT USED			1122																																				
-L- 118+44		RT	1123		998.7	994.7																																	
-L- 118+44 (OUT)		RT	1123	1124		994.7	993.5			16																													
-L- 118+43		LT	1125																																				
-L- 123+75		LT	1201		996.8	994.0																																	
			1201	1202		994.0	992.6																		276														
-L- 121+00		LT	1202		997.6	992.6																																	
-L-121+00 (OUT)		LT	1202	1203		992.6	991.8			24																													
-L- 123+75		RT	1204		996.8	994.0																																	
			1204	1205		994.0	991.6																		276														
-L- 121+00		RT	1205		997.6	991.6																																	
-L- 121+00 (OUT)		RT	1205	1206		991.6	990.3			24																													
NOT USED			1207																																				
-L- 127+45		CL	1208			994.3	993.1																																
NOT USED			1209	1211																																			
-L- 131+50		LT	1212		1005.5	1002.8																																	
			1212	1213		1002.8	1000.1			128																													
-L- 130+20		LT	1213		1002.9	1000.1																																	
			1213	1215		1000.1	998.1																		88														
-L- 129+60		CL	1215		1005.1	998.1																																	
-L- 129+59 (OUT)		RT	1215	1216		998.1	997.5																		60														
NOT USED			1214																																				
-L- 132+75		CL	1217		1011.7	1003.7																																	
-L- 132+56 (OUT)		RT	1217	1218		1003.7	1002.9																			60													
-L- 138+50		CL	1301		1022.4	1019.4																																	
			1301	1302		1019.4	1015.8																		64														
-L- 138+50		LT	1302		1018.8	1015.8																																	
			1302	1303		1015.8	1012.2			228																													
-L- 136+20		LT	1303		1015.4	1012.2																																	
			1303	1304		1012.2	1008.6				168																												
-L- 134+50		LT	1304		1011.6	1008.6																																	
			1304	1305		1008.6	1004.4				148																												
-L- 133+00		LT	1305		1008.6	1004.4																																	
			1305	1217		1004.4	1003.7																			68													
SHEET TOTALS									104	488	412	32	20	36											764	128	104	304	52										

STATION	15" SIDE DRAIN PIPE	18" SIDE DRAIN PIPE	24" SIDE DRAIN PIPE	ENDWALLS STD. 838.01 838.11 OR STD. 838.80 (UNLESS NOTED OTHERWISE) R.C.P.	CU. YARDS C.S.P.	QUANTITIES FOR MASONRY DRAINAGE STRUCTURES "TOTAL L.F. FOR PAY QUANTITY SHALL BE: COL. 'A' + (1.3 X COL. 'B') PER EACH (0' THRU 5.0')	LIN. FT.* A 5.0' THRU 10.0'	LIN. FT.* B 10.0' AND ABOVE	C.B. STD. 840.01 OR STD. 840.02	FRAME, GRATES, AND HOOD STANDARD 840.03 TYPE OF GRATE E	F	G	CONCRETE TRANSITIONAL SECTION DROP INLET	CATCH BASIN	O.T.C.B. STD. 840.04 OR 840.05	D.I. STD. 840.14 OR 840.15	D.I. FRAME & GRATES STD. 840.16	G.D.I. TYPE "A" STD. 840.17 OR 840.26	G.D.I. TYPE "B" STD. 840.18 OR 840.27	G.D.I. TYPE "D" STD. 840.19 OR 840.28	J.B. STD. 840.31 OR 840.32	T.B.J.B. STD. 840.34	T.B.D.I. STD. 840.35 (FOR CAST IRON FRAME & GRATES)	DRIVEWAY DROP INLET, STD. 840.30				G.D.I. (N.S.) FRAME WITH SAG GRATE STD. 840.24	G.D.I. (N.S.) FRAME WITH TWO SAG GRATES STD. 840.24	G.D.I. (N.S.) FRAME WITH SAG GRATE STD. 840.29	G.D.I. (N.S.) FRAME WITH TWO FLAT GRATES STD. 840.29	FRAME WITH GRATES, DRIVEWAY DROP INLET, STD. 840.30	MANHOLE FRAME AND COVER STD. 840.54	TEMPORARY 1" STEEL COVER (SEE DETAIL ON SHEET 2C-10)	PREFORMED SCOUR HOLE		BERM DRAINAGE OUTLET (SY) STD. 850.10 OR 850.11	CONVERT EXIST. D.I. TO J.B. w/ MH (SEE DETAIL ON SHEET 2C-4)			ADJUST EXIST. C.B.	ADJUST EXIST. D.I.	FLOWABLE FILL (CY)	CORR. STEEL PIPE ELBOWS - NO. & SIZE (INCHES)	DRAINAGE PIPE ELBOWS - NO. & SIZE (INCHES)	CONC. & BRICK PIPE PLUG (C.Y.) STD. 840.71	CONC. COLLARS CL. "B" (C.Y.) STD. 840.72	PIPE REMOVAL LIN. FT.	REMARKS
-Y12- 10+90						1													1															1	1																	
-L- 105+40 (IN)																																							11													41	REM 15"
-L- 105+42						1																					1										1															
-L- 105+53						1			1		1																																									
-L- 105+26						1	3.2		1			1																																								
-L- 105+50 (OUT)																																																				
-Y12- 13+54																																																				
-L- 108+05																																																			64	-L- 107+57 LT (IN); -L- 108+55 RT (OUT); REM 30"
-L- 111+48 (IN)																																							31														
-L- 111+48						1													1																1																	
-L- 111+45 (OUT)																																																			122	REM 2-24"
-L- 111+63																																																			10	REM 18"
-DRIVE3- 10+24	32																																																			
-Y12- 12+50																																																				
-Y12- 12+52	52																																																		40	REM 12"
-Y12- 13+55	60																																																			
-L- 116+26						1													1																		1															
-L- 116+35 (OUT)																																						1													81	REM 15"
-L- 113+51																																																				
-L- 116+25						1													1																		1															
-L- 116+25 (OUT)																																																				
NOT USED																																																				
-L- 118+44						1													1																		1															
-L- 118+44 (OUT)																																						1														
-L- 118+43																																					1						1							58	REM 15"
-L- 123+75						1													1																		1															
-L- 121+00						1													1																		1															
-L-121+00 (OUT)																																						1														
-L- 123+75						1													1																		1															
-L- 121+00						1	1.0												1																		1															
-L- 121+00 (OUT)																																						1														
NOT USED																																																				
-L- 127+45																																																				2 @ 36" RCP-IV; -L- 128+01 LT (IN); -L- 126+99 RT (OUT)
NOT USED																																																				
-L- 131+50						1													1																1																	
-L- 130+20						1													1																1																	
																																																			47	REM 18"
-L- 129+60						1	2.0		1		1			1																																						
-L- 129+59 (OUT)																																																				
NOT USED																																																				
-L- 132+75						1	3.0		1		1			1																																					53	REM 18"
-L- 132+56 (OUT)																																																				
-L- 138+50						1			1		1			1																																						
-L- 138+50						1													1																1																	
-L- 136+20						1													1																1																	
-L- 134+50						1													1																1																	
-L- 133+00						1																			1									1	1																
SHEET TOTALS	144					21	9.2		5		4	1		3				2	13		1						2	8		8		1	4		42				1									571	

ABBREVIATIONS

C.B.	CATCH BASIN
N.D.I.	NARROW DROP INLET
D.I.	DROP INLET
G.D.I.	GRATED DROP INLET
G.D.I.(N.S.)	GRATED DROP INLET (NARROW SLOT)
J.B.	JUNCTION BOX
M.H.	MANHOLE
T.B.D.I.	TRAFFIC BEARING DROP INLET
T.B.J.B.	TRAFFIC BEARING JUNCTION BOX

7/2/2015 14:09
R:\Roadway\Proj\R2603_rdy_psh\3D-1_thru_3D-12_DrainageSummaries.xls

COMPUTED BY: RWP DATE: 2/18/2014

CHECKED BY: RSW DATE: 6/24/2014

Note: Invert Elevations indicated are for Bid Purposes only and shall not be used for project construction stakeout. See "Standard Specifications For Roads and Structures, Section 300-5".

NORTH CAROLINA DEPARTMENT OF TRANSPORTATION
DIVISION OF HIGHWAYS

PROJECT NO.	SHEET NO.
R-2603	3D-9

STATEWIDE
LIST OF PIPES, ENDWALLS, ETC. (FOR PIPES 48 INCHES & UNDER)

ABBREVIATIONS

- C.B. CATCH BASIN
- N.D.I. NARROW DROP INLET
- D.I. DROP INLET
- G.D.I. GRATED DROP INLET
- G.D.I.(N.S.) GRATED DROP INLET (NARROW SLOT)
- J.B. JUNCTION BOX
- M.H. MANHOLE
- T.B.D.I. TRAFFIC BEARING DROP INLET
- T.B.J.B. TRAFFIC BEARING JUNCTION BOX

STATION	LOCATION (LT, RT, OR CL)'	STRUCTURE NO. FROM	STRUCTURE NO. TO	TOP ELEVATION	INVERT ELEVATION	INVERT ELEVATION	SLOPE CRITICAL	DRAINAGE PIPE (RCP, CSP, CAAP, HDPE, or PVC) 12"	15"	18"	24"	30"	36"	DO NOT USE RCP	DO NOT USE CSP	DO NOT USE CAAP	DO NOT USE HDPE
-L- 136+00	CL	1306		1018.3	1013.3												
-L- 136+00 (OUT)	RT	1306	1307		1013.3	1010.8											
-L- 141+39 (IN)	LT	1308	1309		1052.2	1020.5			76					X			
-L- 141+25	LT	1309		1023.5	1020.5												
-L- 140+87 (OUT)	RT	1309	1310		1020.5	1019.5											
-L- 144+01 (IN)	LT	1314	1311		1062.4	1028.5			72					X			
-L- 144+00	LT	1311		1031.5	1028.5												
		1311	1312		1028.5	1025.8			152								
-L- 142+50	LT	1312		1028.5	1025.8												
-L- 142+50 (OUT)	RT	1312	1313		1025.8	1025.0											
-DRIVE4- 13+10	LT	1315		1051.9	1046.9												
		1315	1302		1046.9	1015.8			96					X			
-DRIVE4- 10+77	LT	1316		1016.9	1013.9												
		1316	1303		1013.9	1012.2			32								
-Y16- 11+75	RT	1401		1069.0	1066.1												
-Y16- 12+25 (OUT)	RT	1401	1402		1066.1	1063.9											
-L- 145+58 (IN)	LT	1403	1407		1058.5	1033.4			72					X			
-Y16- 13+50	LT	1404		1036.9	1033.4												
		1404	1406		1034.0	1033.4			72								
-L- 148+00	LT	1405		1039.7	1036.7												
		1405	1406		1036.7	1034.0			116								
-L- 146+84	LT	1406		1036.7	1034.0												
		1406	1407		1034.0	1033.4											
-L- 146+05	LT	1407		1036.9	1033.4												
-L- 146+14 (OUT)	RT	1407	1408		1033.4	1031.6											
-Y16- 11+21	RT	1409															
-L- 151+27	RT	1410		1048.7	1045.7												
		1410	1411		1045.7	1045.3											
-L- 151+50	RT	1411		1049.1	1045.3												
-L- 151+50 (OUT)	RT	1411	1412		1045.3	1044.8			24								
-L- 154+50	RT	1413		1055.4	1052.4												
-L- 154+58 (OUT)	RT	1413	1414		1052.4	1048.0			32					X			
-Y16- 11+84	LT	1415															
-L- 157+50	RT	1416		1061.7	1057.7												
-L- 157+50 (OUT)	RT	1416	1417		1057.7	1051.6			24								
-L- 158+75	RT	1418		1064.3	1059.8												
-L- 158+75 (OUT)	RT	1418	1419		1059.8	1053.1			28								
NOT USED		1420															
SEE PIPES 54" & OVER		1421	1422														
NOT USED		1423															
-L- 150+56 (IN)	LT	1424	1426		1044.9	1039.2						12		X			
-L- 149+50	LT	1425		1042.8	1040.1												
		1425	1426		1040.1	1039.2			104								
-L- 150+65	LT	1426		1045.2	1039.2												
-L- 150+09 (OUT)	RT	1426	1427		1039.2	1038.5											
-L- 162+66	RT																
-L- 159+97	CL	1501															
-L- 164+89	CL	1502															
-L- 165+07	RT	1503		1076.4	1073.7												
-L- 164+81 (OUT)	RT	1503	1504		1073.7	1069.5			32					X			
-L- 166+00	RT	1505															
-L- 168+00 (IN)	LT	1506	1508		1084.5	1081.1											
-L- 167+54	RT	1508		1084.7	1081.1												
-L- 167+97 (IN)	RT	1507	1508		1084.8	1081.4				44							
-L- 168+35	RT	1509															
-L- 169+40	RT	1510															
-L- 171+49	CL	1511			1087.3	1083.7											
-L- 173+00	RT	1513															
-L- 168+55	LT	1514															
-L- 163+33	RT	1515															
SHEET TOTALS									932	44		12					

STATION	C.S. PIPE 15" (.064)	18" (.064)	24" (.064)	36" (.079)	42" (.109)	48" (.109)	R.C. PIPE CLASS III 15"	18"	24"	30"	36"	42"	48"	R.C. PIPE CLASS IV 15"	18"	24"	30"	36"	42"	48"	15" SIDE DRAIN PIPE	18" SIDE DRAIN PIPE	24" SIDE DRAIN PIPE	ENDWALLS STD. 838.01 838.11 OR STD. 838.80 (UNLESS NOTED OTHERWISE) CU. YARDS R.C.P.	C.S.P.
-L- 136+00																									
-L- 136+00 (OUT)							56																		
-L- 141+39 (IN)																									
-L- 141+25																									
-L- 140+87 (OUT)								140																	
-L- 144+01 (IN)																									
-L- 144+00																									
-L- 142+50																									
-L- 142+50 (OUT)							128																		
-DRIVE4- 13+10																									
-DRIVE4- 10+77																									
-Y16- 11+75																									
-Y16- 12+25 (OUT)							52																		
-L- 145+58 (IN)																									
-Y16- 13+50																									
-L- 148+00																									
-L- 146+84																									
								80																	
-L- 146+05																									
-L- 146+14 (OUT)									128																
-Y16- 11+21																					32				
-L- 151+27																									
							24																		
-L- 151+50																									
-L- 151+50 (OUT)																									
-L- 154+50																									
-L- 154+58 (OUT)																									
-Y16- 11+84																					32				
-L- 157+50																									
-L- 157+50 (OUT)																									
-L- 158+75																									
-L- 158+75 (OUT)																									
NOT USED																									
SEE PIPES 54" & OVER																									
NOT USED																									
-L- 150+56 (IN)																									
-L- 149+50																									
-L- 150+65																									
-L- 150+09 (OUT)										132															
-L- 162+66																									
-L- 159+97									132																
-L- 164+89									148																
-L- 165+07																									
-L- 164+81 (OUT)																									
-L- 166+00																					52				
-L- 168+00 (IN)									132																
-L- 167+54																									
-L- 167+97 (IN)																									
-L- 168+35																						56			
-L- 169+40																						48			
-L- 171+49													180											6.0	
-L- 173+00																						56			
-L- 168+55																						44			
-L- 163+33																					36				
SHEET TOTALS							260	220	540	132			180								152	204		6.0	

STATION	QUANTITIES FOR MASONRY DRAINAGE STRUCTURES *TOTAL L.F. FOR PAY QUANTITY SHALL BE: COL. 'A' + (1.3 X COL. 'B') PER EACH (0' THRU 5.0')	LIN. FT.* A 5.0' THRU 10.0'	B 10.0' AND ABOVE	C.B. STD. 840.01 OR STD. 840.02	FRAME, GRATES, AND HOOD STANDARD 840.03 TYPE OF GRATE E	F	G	CONCRETE TRANSITIONAL SECTION DROP INLET	CATCH BASIN	O.T.C.B. STD. 840.04 OR 840.05	D.I. STD. 840.14 OR 840.15	D.I. FRAME & GRATES STD. 840.16	G.D.I. TYPE "A" STD. 840.17 OR 840.26	G.D.I. TYPE "B" STD. 840.18 OR 840.27	G.D.I. TYPE "D" STD. 840.19 OR 840.28	J.B. STD. 840.31 OR 840.32	T.B.J.B. STD. 840.34	T.B.D.I. STD. 840.35 (FOR CAST IRON FRAME & GRATES)	DRIVEWAY DROP INLET, STD. 840.30
-L- 136+00	1			1		1			1										
-L- 136+00 (OUT)																			
-L- 141+39 (IN)																			
-L- 141+25	1													1					
-L- 140+87 (OUT)																			
-L- 144+01 (IN)																			
-L- 144+00	1													1					
-L- 142+50	1													1					
-L- 142+50 (OUT)																			
-DRIVE4- 13+10	1													1					
-DRIVE4- 10+77	1													1					
-Y16- 11+75	1													1					
-Y16- 12+25 (OUT)																			
-L- 145+58 (IN)																			
-Y16- 13+50	1													1					
-L- 148+00	1													1					
-L- 146+84	1													1					
-L- 146+05	1												1						
-L- 146+14 (OUT)																			
-Y16- 11+21																			
-L- 151+27	1													1					
-L- 151+50	1													1					
-L- 151+50 (OUT)																			
-L- 154+50	1													1					
-L- 154+58 (OUT)																			
-Y16- 11+84																			
-L- 157+50	1													1					
-L- 157+50 (OUT)																			
-L- 158+75	1													1					
-L- 158+75 (OUT)																			
NOT USED																			
SEE PIPES 54" & OVER																			
NOT USED																			
-L- 150+56 (IN)																			
-L- 149+50	1													1					
-L- 150+65	1	1.0												1					
-L- 150+09 (OUT)																			
-L- 162+66																			
-L- 159+97																			
-L- 164+89																			
-L- 165+07	1													1					
-L- 164+81 (OUT)																			
-L- 166+00																			
-L- 168+00 (IN)																			
-L- 167+54	1													1					
-L- 167+97 (IN)																			
-L- 168+35																			
-L- 169+40																			
-L- 171+49																			
-L- 173+00																			
-L- 168+55																			
-L- 163+33																			
SHEET TOTALS	20	1.0		1		1			1				1	18					

STATION	G.D.I. (N.S.) FRAME WITH SAG GRATE STD. 840.24	G.D.I. (N.S.) FRAME WITH TWO SAG GRATES STD. 840.24	G.D.I. (N.S.) FRAME WITH SAG GRATE STD. 840.29	G.D.I. (N.S.) FRAME WITH TWO FLAT GRATES STD. 840.29	FRAME WITH GRATES, DRIVEWAY DROP INLET, STD. 840.30	MANHOLE FRAME AND COVER STD. 840.54	TEMPORARY 1" STEEL COVER (SEE DETAIL ON SHEET 2C-10)	PREFORMED SCOUR HOLE	BERM DRAINAGE OUTLET (SY) STD. 850.10 OR 850.11	CONVERT EXIST. D.I. TO J.B. w/ MH (SEE DETAIL ON SHEET 2C-4)	ADJUST EXIST. C.B.	ADJUST EXIST. D.I.	FLOWABLE FILL (CY)	CORR. STEEL PIPE ELBOWS - NO. & SIZE (INCHES)	DRAINAGE PIPE ELBOWS - NO. & SIZE (INCHES)	CONC. & BRICK PIPE PLUG (C.Y.) STD. 840.71	CONC. COLLARS CL. "B" (C.Y.) STD. 840.72	PIPE REMOVAL LIN. FT.	REMARKS
-L- 136+00																			
-L- 136+00 (OUT)								1											
-L- 141+39 (IN)									11										
-L- 141+25		1																	
-L- 140+87 (OUT)																		36	REM 18"
-L- 144+01 (IN)									11										
-L- 144+00		1																	
-L- 142+50		1																	
-L- 142+50 (OUT)								1										47	REM 18"
-DRIVE4- 13+10		1																	
-DRIVE4- 10+77		1																	
-Y16- 11+75		1																	
-Y16- 12+25 (OUT)																		33	REM 15"
-L- 145+58 (IN)									11										
-Y16- 13+50		1																	
-L- 148+00		1																	
-L- 146+84		1																	
-L- 146+05	1	1					1											32	REM 15"
-L- 146+14 (OUT)																		135	REM 2-15", 1-18"
-Y16- 11+21																			
-L- 151+27				1															
-L- 151+50				1															
-L- 151+50 (OUT)																			
-L- 154+50				1															
-L- 154+58 (OUT)																			
-Y16- 11+84																			
-L- 157+50				1															
-L- 157+50 (OUT)																		62	REM 18"
-L- 158+75				1															
-L- 158+75 (OUT)																			
NOT USED																			
SEE PIPES 54" & OVER																			
NOT USED																			
-L- 150+56 (IN)									31										
-L- 149+50		1																	
-L- 150+65		1																	
-L- 150+09 (OUT)																		47	REM 30"
-L- 162+66																		69	REM 18"
-L- 159+97																		66	-L- 160+00 LT (IN); -L- 159+95 RT (OUT); REM 18"
-L- 164+89																		41	-L- 165+00 LT (IN); -L- 164+80 RT (OUT); REM 30"
-L- 165+07		1																	
-L- 164+81 (OUT)																			
-L- 166+00																			
-L- 168+00 (IN)																		57	REM 18"
-L- 167+54		1																	
-L- 167+97 (IN)																			
-L- 168+35																		31	REM 15"
-L- 169+40																			
-L- 171+49																			-L- 172+07 LT (IN); -L- 171+04 RT (OUT)
-L- 173+00																			
-L- 168+55																			
-L- 163+33																			
SHEET TOTALS	1	14		5			1	2	64									656	

COMPUTED BY: RWP DATE: 2/18/2014

CHECKED BY: RSW DATE: 6/8/2014

Note: Invert Elevations indicated are for Bid Purposes only and shall not be used for project construction stakeout. See "Standard Specifications For Roads and Structures, Section 300-5".

NORTH CAROLINA DEPARTMENT OF TRANSPORTATION
DIVISION OF HIGHWAYS

STATEWIDE
LIST OF PIPES, ENDWALLS, ETC. (FOR PIPES 48 INCHES & UNDER)

PROJECT NO.: R-2603 SHEET NO.: 3D-10

STATION	LOCATION (LT, RT, OR CL)	STRUCTURE NO. FROM	STRUCTURE NO. TO	TOP ELEVATION	INVERT ELEVATION	INVERT ELEVATION	SLOPE CRITICAL	DRAINAGE PIPE (RCP, CSP, CAAP, HDPE, or PVC) 12"	15"	18"	24"	30"	36"	DO NOT USE RCP	DO NOT USE CSP	DO NOT USE CAAP	DO NOT USE HDPE
-L- 174+00	RT	1601															
-L- 179+00	CL	1602		1128.0	1125.0												
		1602	1603		1125.0	1123.6											
-L- 178+50	CL	1603		1126.6	1123.6												
		1603	1604		1123.6	1120.1											
-L- 178+50	LT	1604		1125.1	1120.1												
		1604	1606		1120.1	1115.9			160								
-L- 176+89 (IN)	LT	1605	1606		1120.6	1115.9				16				X			
-L- 176+90	LT	1606		1118.9	1115.9												
		1606	1624		1115.9	1107.7				212							
-L- 174+77	LT	1624		1110.7	1107.7												
		1624	1607		1107.7	1099.3				180							
-L- 173+00	LT	1607		1104.3	1099.3												
-L- 172+65 (OUT)	LT	1607	1512		1099.3	1090.6				56				X			
-Y18- 31+64	LT	1608		1126.9	1122.9												
		1608	1609		1122.9	1122.2											
-Y18- 31+61	CL	1609		1129.2	1122.2												
		1609	1610		1122.2	1119.1											
-L- 181+50	RT	1610		1126.6	1119.1												
-L- 181+00 (OUT)	RT	1610	1611		1119.1	1118.0			48								
-Y18- 29+02 (IN)	LT	1620	1621		1134.1	1130.8			12					X			
-Y18- 29+02	LT	1621		1133.6	1130.8												
		1621	1612		1130.8	1127.5			96								
-Y18- 30+00	LT	1612		1130.2	1127.2												
		1612	1613		1127.2	1125.0					196						
-L- 185+00	LT	1613		1128.0	1125.0												
-L- 185+50 (OUT)	LT	1613	1614		1125.0	1124.7					52						
-L- 184+00 (IN)	RT	1615	1616		1138.2	1123.7			32					X			
-L- 184+00	RT	1616		1126.8	1124.0												
		1616	1618		1124.0	1119.4			196								
-L- 185+91 (IN)	RT	1617	1618		1133.4	1119.4			36					X			
-L- 186+00	RT	1618		1122.4	1119.4												
		1618	1702		1119.4	1114.4			148								
-L- 186+78	CL	1619		1122.9	1119.9												
		1619	1703		1119.9	1113.8											
NOT USED		1622															
-Y18- 34+70	LT	1623		1141.3	1139.4												
-Y18- 34+70 (OUT)	RT	1623	1625		1139.4	1138.5											
SEE PIPES 54" & OVER		1626	1627														
-L- 187+50 (IN)	RT	1701	1702		1131.1	1114.7			36					X			
-L- 187+50 (IN)	RT	1702		1117.4	1114.4												
		1702	1703		1114.4	1113.5											
-L- 187+95 (IN)	LT	1704	1703		1115.5	1113.0											
-L- 187+96	CL	1703		1119.5	1113.0												
		1703	1705		1113.0	1109.6											
-L- 189+16	CL	1705		1115.2	1109.6												
		1705	1706		1109.6	1108.7											
-L- 189+50	LT	1706		1112.7	1108.7												
		1706	1707		1108.7	1103.7						120					
-L- 190+68 (IN)	LT	1708	1707		1104.5	1103.2						12		X			
-L- 190+70	LT	1707		1107.7	1103.7												
		1707	1709		1103.7	1101.0						72					
-L- 191+40	LT	1709		1105.0	1101.0												
		1709	1710		1101.0	1095.6						160					
-L- 192+98 (IN)	LT	1720	1710	1101.8	1095.6					12				X			
-L- 193+00	LT	1710		1099.6	1095.6												
-L- 193+50 (OUT)	LT	1710	1711		1095.6	1093.0						52					
SHEET TOTALS									764	476	248	416					

STATION	FROM	TO	C.S. PIPE 15" .064	18" .064	24" .064	36" .079	42" .109	48" .109	R.C. PIPE CLASS III 15"	18"	24"	30"	36"	42"	48"	R.C. PIPE CLASS IV 15"	18"	24"	30"	36"	42"	48"	15" SIDE DRAIN PIPE	18" SIDE DRAIN PIPE	24" SIDE DRAIN PIPE
-L- 174+00	1601																							52	
	1602	1603							52																
	1603	1604							44																
	1608	1609							44																
	1609	1610							120																
	1619	1703							120																
-Y18- 34+70 (OUT)	1623	1625							76																
	1702	1703								80															
-L- 187+95 (IN)	1704	1703									60														
	1703	1705										120													
	1705	1706										56													
SHEET TOTALS									456	80	60	176												52	

STATION	FROM	TO	ENDWALLS STD. 838.01, 838.11 OR STD. 838.80 (UNLESS NOTED OTHERWISE) CU. YARDS R.C.P.	C.S.P.	QUANTITIES FOR MASONRY DRAINAGE STRUCTURES PER EACH (0' THRU 5.0')	LIN. FT.* A 5.0' THRU 10.0'	B 10.0' AND ABOVE	C.B. STD. 840.01 OR STD. 840.02	FRAME, GRATES, AND HOOD STANDARD 840.03 TYPE OF GRATE E	F	G	CONCRETE TRANSITIONAL SECTION DROP INLET	CATCH BASIN	O.T.C.B. STD. 840.04 OR 840.05	D.I. STD. 840.14 OR 840.15	D.I. FRAME & GRATES STD. 840.16	G.D.I. TYPE "A" STD. 840.17 OR 840.26	G.D.I. TYPE "B" STD. 840.18 OR 840.27	G.D.I. TYPE "D" STD. 840.19 OR 840.28	J.B. STD. 840.31 OR 840.32	T.B.J.B. STD. 840.34	T.B.D.I. STD. 840.35 (FOR CAST IRON FRAME & GRATES)	DRIVEWAY DROP INLET, STD. 840.30
-L- 179+00	1602				1			1			1		1										
-L- 178+50	1603				1			1			1		1										
-L- 178+50	1604				1													1					
-L- 176+90	1606				1													1					
-L- 174+77	1624				1													1					
-L- 173+00	1607				1													1					
-Y18- 31+64	1608				1												1						
-Y18- 31+61	1609				1	2.0						1			1	1							
-L- 181+50	1610				1	2.5												1					
-Y18- 29+02	1621				1													1					
-Y18- 30+00	1612				1												1						
-L- 185+00	1613				1												1						
-L- 184+00	1616				1													1					
-L- 186+00	1618				1													1					
-L- 186+78	1619				1			1		1			1										
-Y18- 34+70	1623				1													1					
-L- 187+50 (IN)	1702				1													1					
-L- 187+96	1703				1	1.5		1		1			1										
-L- 189+16	1705				1	0.6		1		1			1										
-L- 189+50	1706				1												1						
-L- 190+70	1707				1												1						
-L- 191+40	1709				1												1						
-L- 192+98 (IN)	1720	1710				1.2																	
-L- 193+00	1710				1												1						
SHEET TOTALS					23	7.8		5		3	2	1	5		1	1	7	10					

STATION	FROM	TO	(blank)	(blank)	(blank)	G.D.I. (N.S.) FRAME WITH SAG GRATE STD. 840.24	G.D.I. (N.S.) FRAME WITH TWO SAG GRATES STD. 840.24	G.D.I. (N.S.) FRAME WITH SAG GRATE STD. 840.29	G.D.I. (N.S.) FRAME WITH TWO FLAT GRATES STD. 840.29	FRAME WITH GRATES, DRIVEWAY DROP INLET, STD. 840.30	MANHOLE FRAME AND COVER STD. 840.54	TEMPORARY 1" STEEL COVER (SEE DETAIL ON SHEET 2C-10)	PREFORMED SCOUR HOLE	(blank)	BERM DRAINAGE OUTLET (SY) STD. 850.10 OR 850.11	CONVERT EXIST. D.I. TO J.B. w / MH (SEE DETAIL ON SHEET 2C-4)	(blank)	(blank)	ADJUST EXIST. C.B.	ADJUST EXIST. D.I.	FLOWABLE FILL (CY)	CORR. STEEL PIPE ELBOWS - NO. & SIZE (INCHES)	DRAINAGE PIPE ELBOWS - NO. & SIZE (INCHES)	CONC. & BRICK PIPE PLUG (C.Y.) STD. 840.71	CONC. COLLARS CL. "B" (C.Y.) STD. 840.72	PIPE REMOVAL LIN. FT.	REMARKS
-L- 174+00	1601																									30	REM 18"
-L- 178+50	1604						1																				
-L- 176+89 (IN)	1605	1606													11												
-L- 176+90	1606						1																				
	1606	1624																								48	REM 15"
-L- 174+77	1624						1																				
-L- 173+00	1607						1																				
-Y18- 31+64	1608					1	1																			46	REM 18"
	1609	1610																								61	REM 18"
-L- 181+50	1610						1																				
-Y18- 29+02 (IN)	1620	1621													11												
-Y18- 29+02	1621						1																				
-Y18- 30+00	1612						1																				
-L- 185+00	1613						1																				
-L- 184+00 (IN)	1615	1616													11												
-L- 184+00	1616						1																				
-L- 185+91 (IN)	1617	1618													11												
-L- 186+00	1618						1																				
	1619	1703																								21	REM 15"
-Y18- 34+70	1623						1																				
-L- 187+50 (IN)	1701	1702													11												
-L- 187+50 (IN)	1702						1																				
	1702	1703																								39	REM 18"
-L- 189+50	1706						1																				
-L- 190+68 (IN)	1708	1707													31												
-L- 190+70	1707						1																				
-L- 191+40	1709						1																				
	1709	1710																								194	REM 2-24"
-L- 192+98 (IN)	1720	1710													11											21	REM 15"
-L- 193+00	1710						1																			59	REM 18"
SHEET TOTALS						1	17								97											519	

ABBREVIATIONS

- C.B. CATCH BASIN
- N.D.I. NARROW DROP INLET
- D.I. DROP INLET
- G.D.I. GRATED DROP INLET
- G.D.I.(N.S.) GRATED DROP INLET (NARROW SLOT)
- J.B. JUNCTION BOX
- M.H. MANHOLE
- T.B.D.I. TRAFFIC BEARING DROP INLET
- T.B.J.B. TRAFFIC BEARING JUNCTION BOX

COMPUTED BY:	RWP	DATE:	2/18/2014
CHECKED BY:	RSW	DATE:	6/24/2014

NORTH CAROLINA DEPARTMENT OF TRANSPORTATION
DIVISION OF HIGHWAYS

PROJECT NO.	SHEET NO.
R-2603	3D-11

Note: Invert Elevations indicated are for Bid Purposes only and shall not be used for project construction stakeout. See "Standard Specifications For Roads and Structures, Section 300-5".

STATEWIDE
LIST OF PIPES, ENDWALLS, ETC. (FOR PIPES 48 INCHES & UNDER)

A. Station, location, structure and elevations

STATION	LOCATION (LT, RT, OR CL)'	STRUCTURE NO. FROM	STRUCTURE NO. TO	TOP ELEVATION	INVERT ELEVATION	INVERT ELEVATION	SLOPE CRITICAL
-L- 190+38 (IN)	RT	1712	1713		1123.8	1105.2	
-L- 190+50	RT	1713		1107.9	1104.9		
		1713	1714		1104.9	1102.8	
-L- 191+15	RT	1714		1105.8	1102.8		
		1714	1715		1102.8	1100.8	
-L- 192+17	RT	1715		1105.4	1100.8		
		1715	1716		1100.8	1096.6	
-L- 193+10	RT	1716		1099.6	1096.6		
		1716	1717		1096.6	1089.8	
-L- 194+50	RT	1717		1094.6	1089.8		
		1717	1719		1089.8	1085.1	
-L- 194+79 (IN)	LT	1718	1719		1086.4	1085.1	
-L- 195+18	LT	1719		1092.4	1085.1		
-L- 187+70	LT	1721					
-Y1- 15+15	RT	1801		1183.5	1180.6		
-Y1- 17+53	RT	1802		1174.2	1166.2		
		1802	1803		1166.2	1165.7	
-Y1- 18+00	RT	1803		1170.7	1165.7		
-Y1- 18+68 (OUT)	LT	1803	1804		1165.7	1165.0	
-Y18- 19+75	LT	2001					
-Y18- 25+69	CL	2002					
-Y18- 25+69	RT						
-Y18- 23+73	LT	2003					
-Y18- 22+60	LT	2004					
-Y18- 21+05	CL	2005					
-DRIVE1- 11+26	CL	2101					
-Y18- 35+44	RT	2102					
-Y18- 37+50	RT	2103					
-Y18- 39+50	RT	2104					
-Y18- 39+87	LT	2105					
-Y18- 41+07	RT	2106					
-Y19- 13+09	CL	2107					
-Y19- 13+09	CL						
TEMPORARY DRAINAGE							
-Y9DET- 10+86	CL	T01					
-Y16DET- 16+61 (IN)	RT	T02	1407				
-Y16DET- 16+70 (IN)	LT	T03	1407				
-LDETOUR -13+86	CL	T04			1076.6	1051.0	
-LDETOUR- 14+74	RT	T05			1048.7	1045.8	
-LDETOUR- 15+04	CL	T06			1068.3	1045.8	
-Y7DET- 8+12	CL	T07					
SHEET TOTALS							
PROJECT TOTALS FROM PIPES 54" & OVER SHEET 3D-12							
PROJECT TOTALS							

B. Drainage pipe (RCP, CSP, CAAP, HDPE, or PVC) and C.S. pipe (SIZE / THICKNESS OR GAUGE)

STATION	DRAINAGE PIPE 12"	15"	18"	24"	30"	36"	DO NOT USE RCP	DO NOT USE CSP	DO NOT USE CAAP	DO NOT USE HDPE	C.S. PIPE 15" .064	18" .064	24" .064	36" .079	42" .109	48" .109
-L- 190+38 (IN)		48					X									
1714–1715				104												
1715–1716				92												
1716–1717				140												
-L- 194+79 (IN)					40											
-Y9DET- 10+86			36													
-Y16DET- 16+61 (IN)		24														
-Y16DET- 16+70 (IN)		16														
-LDETOUR -13+86												112				
-LDETOUR- 14+74																76
-LDETOUR- 15+04												120				
SHEET TOTALS		88	36	336	40							232				76
PROJECT TOTALS	116	4,220	1,084	816	564	64					300	352		172		76

C. R.C. pipe and side drain pipe

STATION	R.C. PIPE CLASS III 15"	18"	24"	30"	36"	42"	48"	R.C. PIPE CLASS IV 15"	18"	24"	30"	36"	42"	48"	15" SIDE DRAIN PIPE	18" SIDE DRAIN PIPE	24" SIDE DRAIN PIPE
1713–1714			64														
1717–1719			112														
-L- 187+70															32		
1802–1803	44																
-Y1- 18+68 (OUT)	92																
-Y18- 19+75																40	
-Y18- 25+69 (CL)				120													
-Y18- 23+73																48	
-Y18- 22+60																48	
-Y18- 21+05			100														
-DRIVE1- 11+26	76																
-Y18- 35+44															40		
-Y18- 37+50															40		
-Y18- 39+50															48		
-Y18- 39+87															32		
-Y18- 41+07															28		
-Y19- 13+09 (2107)		64															
-Y7DET- 8+12																72	
SHEET TOTALS	212	64	276	120											220	208	
PROJECT TOTALS	8,380	2,720	3,072	1,560	96		596	32				352			640	544	

D. Endwalls, masonry drainage structures, frames and inlets

STATION	ENDWALLS STD. 838.01, 838.11 OR STD. 838.80 (UNLESS NOTED OTHERWISE) CU. YARDS R.C.P.	C.S.P.	QUANTITIES FOR MASONRY DRAINAGE STRUCTURES *TOTAL L.F. FOR PAY QUANTITY SHALL BE: COL. 'A' + (1.3 X COL. 'B') PER EACH (0' THRU 5.0')	LIN. FT.* A 5.0' THRU 10.0'	B 10.0' AND ABOVE	C.B. STD. 840.01 OR STD. 840.02	FRAME, GRATES, AND HOOD STANDARD 840.03 TYPE OF GRATE E	F	G	CONCRETE TRANSITIONAL SECTION DROP INLET	CATCH BASIN	O.T.C.B. STD. 840.04 OR 840.05	D.I. STD. 840.14 OR 840.15	D.I. FRAME & GRATES STD. 840.16	G.D.I. TYPE "A" STD. 840.17 OR 840.26	G.D.I. TYPE "B" STD. 840.18 OR 840.27	G.D.I. TYPE "D" STD. 840.19 OR 840.28	J.B. STD. 840.31 OR 840.32	T.B.J.B. STD. 840.34	T.B.D.I. STD. 840.35 (FOR CAST IRON FRAME & GRATES)	DRIVEWAY DROP INLET, STD. 840.30
-L- 190+50			1												1						
-L- 191+15			1												1						
-L- 192+17			1																1		
-L- 193+10			1												1						
-L- 194+50			1												1						
-L- 195+18			1	2.3											1						
-Y1- 15+15								1													
-Y1- 17+53			1	3.0														1			
-Y1- 18+00			1			1		1													
SHEET TOTALS			8	5.3		1		2							5			1	1		
PROJECT TOTALS	20.0	2.0	260	105.8	19.8	123	10	68	46	9	23	1	11	11	25	86		11	1	1	1
PROJECT TOTALS (combined)	22			132																	

E. Frames, miscellaneous items, pipe removal and remarks

STATION	G.D.I. (N.S.) FRAME WITH SAG GRATE STD. 840.24	G.D.I. (N.S.) FRAME WITH TWO SAG GRATES STD. 840.24	G.D.I. (N.S.) FRAME WITH SAG GRATE STD. 840.29	G.D.I. (N.S.) FRAME WITH TWO FLAT GRATES STD. 840.29	FRAME WITH GRATES, DRIVEWAY DROP INLET, STD. 840.30	MANHOLE FRAME AND COVER STD. 840.54	TEMPORARY 1" STEEL COVER (SEE DETAIL ON SHEET 2C-10)	PREFORMED SCOUR HOLE	BERM DRAINAGE OUTLET (SY) STD. 850.10 OR 850.11	CONVERT EXIST. D.I. TO J.B. w / MH (SEE DETAIL ON SHEET 2C-4)	ADJUST EXIST. C.B.	ADJUST EXIST. D.I.	FLOWABLE FILL (CY)	CORR. STEEL PIPE ELBOWS - NO. & SIZE (INCHES)	DRAINAGE PIPE ELBOWS - NO. & SIZE (INCHES)	CONC. & BRICK PIPE PLUG (C.Y.) STD. 840.71	CONC. COLLARS CL. "B" (C.Y.) STD. 840.72	PIPE REMOVAL LIN. FT.	REMARKS
-L- 190+38 (IN)									11										
-L- 190+50		1																	
1713–1714																		51	REM 15"
-L- 191+15		1																	
1714–1715																		100	REM 15"
-L- 192+17						1												16	REM 8' EA. OF 2 EX. 12"
-L- 193+10		1																	
-L- 194+50		2																	
1717–1719																		77	REM 18"
-L- 194+79 (IN)																			REM 38' OF EX. 18" (SAME TRENCH)
-L- 195+18		1																	
-Y1- 15+15											1								
-Y1- 17+53						1													
1802–1803																		42	REM 42' OF EX. 15"
-Y1- 18+68 (OUT)																		89	REM 15"
-Y18- 19+75																		31	REM 15"
-Y18- 25+69 (CL)																			-Y18- 20+99 LT (IN); -Y18- 21+11 RT (OUT)
-Y18- 25+69 (RT)																			REM 24" (SAME TRENCH)
-Y18- 23+73																		32	REM 15"
-Y18- 22+60																		31	REM 15"
-Y18- 21+05																		51	-Y18- 25+70 LT (IN); -Y18- 25+68 RT (OUT); REM 24"
-DRIVE1- 11+26																		74	REM 2-15"
-Y18- 37+50																		24	REM 15"
-Y18- 39+87																		20	REM 15"
-Y18- 41+07																		30	REM 15"
-Y19- 13+09 (2107)																			-Y19- 13+00 RT (IN); -Y19- 13+25 LT (OUT)
-Y19- 13+09																			REM 18" (SAME TRENCH)
-LDETOUR -13+86														1 @ 18				112	
-LDETOUR- 14+74																		76	EXTEND EX. CULVERT WITH TEMP. 48" CMP
-LDETOUR- 15+04																		120	
SHEET TOTALS		6				2			11		1			1 @ 18				976	
PROJECT TOTALS FROM PIPES 54" & OVER SHEET 3D-12						2													
PROJECT TOTALS	7	72	2	42	30	15	1	6	353	1	1	1	580	1 @ 18	2 @ 15	0.130		8,516	

ABBREVIATIONS

C.B.	CATCH BASIN
N.D.I.	NARROW DROP INLET
D.I.	DROP INLET
G.D.I.	GRATED DROP INLET
G.D.I.(N.S.)	GRATED DROP INLET (NARROW SLOT)
J.B.	JUNCTION BOX
M.H.	MANHOLE
T.B.D.I.	TRAFFIC BEARING DROP INLET
T.B.J.B.	TRAFFIC BEARING JUNCTION BOX

COMPUTED BY:	RWP	DATE:	2/18/2014
CHECKED BY:	RSW	DATE:	6/8/2014

Note: Invert Elevations indicated are for Bid Purposes only and shall not be used for project construction stakeout. See "Standard Specifications For Roads and Structures, Section 300-5".

NORTH CAROLINA DEPARTMENT OF TRANSPORTATION
DIVISION OF HIGHWAYS

PROJECT NO.	SHEET NO.
R-2603	3D-12

LIST OF PIPES, ENDWALLS, ETC. (FOR PIPES 54" & OVER)

STATION	LOCATION (LT, RT, OR CL)'	STRUCTURE NO. FROM	STRUCTURE NO. TO	TOP ELEVATION	INVERT ELEVATION	INVERT ELEVATION	SLOPE CRITICAL	CLASS III R.C. PIPE (UNLESS NOTED OTHERWISE) 54"	60"	66"	72"	78"	84"
-L- 155+75 (IN)	LT	1421	1422		1052.0	1049.2		104					
-L- 155+23	CL	1422		1057.8	1049.2								
-L- 180+78 (IN)	LT	1626	1627		1112.7	1111.6			48				
-L- 180+86	LT	1627		1131.0	1111.6								
PROJECT TOTALS								104	48				

STATION (SIZE / THICKNESS OR GAUGE)	C.S. PIPE 54" .109	54" .138	54" .168	SHOP ELON-GATED .138	SHOP ELON-GATED .168	60" .138	60" .168	66" .138	66" .168	72" .139	72" .168	STRUCTURAL PLATE PIPE 60" 12	60" 10	66" 12	66" 10	72" 12	72" 10
-L- 155+75 (IN)																	
-L- 155+23																	
-L- 180+78 (IN)																	
-L- 180+86																	
PROJECT TOTALS																	

STATION	REINFORCED ENDWALLS WITH R.C. - C.Y.	REINFORCED ENDWALLS WITH C.S. - C.Y.	MASONRY DRAINAGE STRUCTURES CUBIC YARDS	C.B. STD. 840.01 OR 840.02	FRAMES, GRATES & HOOD STANDARD 840.03 TYPE OF GRATE E	F	G	CONCRETE TRANSITIONAL SECTION DROP INLET	CATCH BASIN	G.D.I. TYPE "A" STD. 840.17 OR 840.26	G.D.I. TYPE "B" STD. 840.18 OR 840.27	G.D.I. TYPE "D" STD. 840.19 OR 840.28	J.B. STD. 840.31 OR 840.32	SPECIAL T.B.J.B. (SEE DETAIL ON SHEET 2C-8)	SPECIAL T.B.J.B. (SEE DETAIL ON SHEET 2C-9)	G.D.I. (N.S.) FRAME WITH SAG GRATE STD. 840.24	G.D.I. (N.S.) FRAME WITH TWO SAG GRATES STD. 840.24	G.D.I. (N.S.) FRAME WITH TWO FLAT GRATES STD. 840.29	FRAME WITH GRATES, DRIVEWAY DROP INLET, STD. 840.30	MANHOLE FRAME AND COVER STD. 840.54	TEMPORARY 1" STEEL COVER (SEE DETAIL ON SHEET 2C-10)	PREFORMED SCOUR HOLE	BERM DRAINAGE OUTLET (SY) STD. 850.10 OR 850.11	CONVERT EXIST. D.I. TO J.B. w/ MH (SEE DETAIL ON SHEET 2C-4)	ADJUST EXIST. C.B.	ADJUST EXIST. D.I.	FLOWABLE FILL (CY)	CORR. STEEL PIPE ELBOWS - NO. & SIZE (INCHES)	CONC. & BRICK PIPE PLUG (C.Y.) STD. 840.71	CONC. COLLARS CL. "B" C.Y. STD. 840.72	PIPE REMOVAL LIN. FT.	REMARKS
-L- 155+75 (IN)																																
-L- 155+23			8.1											1						1												SPECIAL TBJB (SEE DETAIL, SHT. 2C-8)
-L- 180+78 (IN)	5.7																															
-L- 180+86			13.6												1					1												SPECIAL TBJB (SEE DETAIL, SHT. 2C-9)
PROJECT TOTALS	5.7		21.7																													
	6		22											1	1					2												

ABBREVIATIONS

C.B.	CATCH BASIN
N.D.I.	NARROW DROP INLET
D.I.	DROP INLET
G.D.I.	GRATED DROP INLET
G.D.I.(N.S.)	GRATED DROP INLET (NARROW SLOT)
J.B.	JUNCTION BOX
M.H.	MANHOLE
T.B.D.I.	TRAFFIC BEARING DROP INLET
T.B.J.B.	TRAFFIC BEARING JUNCTION BOX

7/2/2015 14:08
R:\Roadway\Proj\R2603_rdy_psh03D-1_thru_3D-12_DrainageSummaries.xls

COMPUTED BY: RWP DATE: 9/30/2014
CHECKED BY: KSH DATE: 9/30/2014

STATE OF NORTH CAROLINA
DIVISION OF HIGHWAYS

PROJECT REFERENCE NO.	SHEET NO.
R-2603	3G-1

M A Engineering Consultants, Inc.
NC License: F-0160
598 East Chatham Street Suite 137 Cary, NC 27511
Phone: 919.297.0220 Fax: 919.297.0221

SUMMARY OF GEOTEXTILE FOR PAVEMENT STABILIZATION

LINE	BEG STATION	END STATION	LOCATION	AREA (SY)
-L-	59+00	61+00	RT	756
-L-	75+00	79+00	RT	1,511
-L-	95+75	99+50	RT	1,417
-L-	180+25	181+25	LT	378
			TOTAL	4,062
			SAY	4,100

THE AREAS SHOWN ABOVE SHOULD BE INVESTIGATED FOR NEED DURING CONSTRUCTION.
NOTE: SEE SHEET 2A-1 FOR GEOTEXTILE FOR PAVEMENT STABILIZATION DETAIL.

SUMMARY OF SUBSURFACE DRAINAGE

LINE	STATION	STATION	LOCATION LT / RT / CL	DRAIN TYPE* UD/BD/SD	LF
			CONTINGENCY	UD	500
				GRAND TOTAL (LF)	500
				SAY (LF)	500

*UD = UNDERDRAIN
*BD = BLIND DRAIN
*SD = SUBSURFACE DRAIN

SUMMARY OF AGGREGATE SUBGRADE / STABILIZATION

LINE	BEG STATION	END STATION	AGGREGATE TYPE* ASU / AST	AGGREGATE THICKNESS (INCHES)	SHALLOW UNDERCUT (CY)	CLASS IV SUBGRADE STABILIZATION (TONS)	GEOTEXTILE FOR SOIL STABILIZATION (SY)	STABILIZER AGGREGATE (TONS)	CLASS IV AGGREGATE STABILIZATION (TONS)
ENGINEERS DISCRETION							500		
CONTINGENCY			ASU		500	1,000	1,500		
CONTINGENCY			AST	3				500	
TOTAL					500	1,000	2,000	500	
SAY					500	1,000	2,000	500	

*ASU = AGGREGATE SUBGRADE
*AST = AGGREGATE STABILIZATION
Total square yards of Geotextile for Soil Stabilization is only the estimated quantity for ASU/AST and may only represent a portion of the geotextile quantity shown in the Item Sheets of the Proposal.

PROJ. REFERENCE NO.	SHEET NO.
R-2603	3P-1

STATE OF NORTH CAROLINA
DIVISION OF HIGHWAYS
PARCEL INDEX SHEET

PARCEL No.	SHEET No.	PROPERTY OWNER NAME
10	18	EAC INVESTMENTS LLC
13	4,18	MACK BROWN & WILLA BROWN
15	4	JAMES BROWN & ELLAGRENE BROWN
16	4	COMMUNITY ONE BANK
17	4	CARL BYRD
18, 18Z	4	GARY LACKEY & ELLEN LACKEY
19	4,5	LADD FURNITURE INC
20	4,5	JOHN MCNEIL & DONNA MCNEIL
21	5	FORESTER RENTALS
22	5	JOHNSON OIL AND TRACTOR INC
23	5	HOWELL & SONS INVESTMENTS, LLC
24	5	JOE HAMBY, GAIL HAMBY, BOBBY HAMBY & OPAL HAMBY
25	5	600 ELKIN HIGHWAY LLC
26	5	SUNCREST ASSOCIATES LLC
27	5,6	NANCY KING TEXTILES INC
28	5	JAMES DAY & PAT DAY
29	5	FRANK DAY & PEGGY DAY
30	5,6	SANFORD CALL JR & LINDA CALL
31	6	SAMARITIAN'S PURSE
32	6	CHEEKS WATER WORKS INC
33	6	CR JOHNSON & TR JOHNSON
34	6	RITESHKUMAR D. PAREL
35	6	SAMARITAN'S PURSE
36	6	SUNCREST ASSOCIATES LLC
37	6	DON HAYES & HOOVER HAYES
38	6	DANNY PENDRY
39, 39Z	6,7	WILKES COUNTY VOCATIONAL WORKSHOP INC
40	6,7	JAMES BROWN & LESSIE BROWN
41	7	TERRY BROWN
42	7	AKG INC
43	7	BRUSHY MOUNTAIN BAPTIST ASSOCIATION INC
44	7	DOUGLAS HINCHER
45	7	JAMES BROWN & LESSIE BROWN
46	7	TERRY BROWN JR
47, 47Z	7,8	DENNIS WHITTINGTON
48	7	WILLIAM R. LOWE
49, 49Z	7,8	BILLY BLEVINS SR
50	8	BILLY BLEVINS SR
51	8	INFUSION POINTS, LLC
52	8	WILKES COUNTY FARM BUREAU INC
54, 54Z	8	CARL M. BYRD
55	8,9	WILLIAM EUGENE HOLLAND
55A	8	BILLY RAY HOLLAND
56	8,9	PATRICIA BILLINGS & TYRE BILLINGS
57	8,9	TRAVIS JAMES MATHIS
58	9	J&S FAIR REAL ESTATE HOLDING, LLC
59	9	FRANK JOHNSON
60	9	VERNON WYATT & ANNA WYATT
61	9	BILLY ELMORE
62	9	WHITLEY DICKENSON PROPERTIES LLC
63	9	ROBERT GENTLE
64, 64Z	9	LINDA ST CLAIR
65	9	DARRYL JOHNSON
66, 66Z	9	ROGER & KAREN HAMBY
67	9	DARRYL JOHNSON & VEATRICE JOHNSON
68, 68Z	9	LUCY JOHNSON
70	9	BRUCE EVANS & DEBRA EVANS
71	9	JASON SCOTT BROWN
72	9	KEN HAMBY & MARK BARE
73, 73Z	9,10	TP WILKES LLC
74	9,10	FRED A.REEVES, JR. & DONNA R. KEY
75, 75Z	10	WILLIAM ELLER & ALMEDA ELLER
76	10	FRED REEVES
77	10	FRED REEVES CONSTRUCTION CO INC
78	10,11,12	HUTCHINSONS LLC
78A	11	FRANK VERNON JOHNSON
79	10,11	TAM HUTCHINSON & MARY HUTCHINSON

PARCEL No.	SHEET No.	PROPERTY OWNER NAME
80	11,12	JAMES HUTCHINSON JR
81	12	BLUE RIDGE WATER ASSOCIATION INC.
82, 82Z	12,13,14	WILLIAM BLACKBURN & EVELYN BLACKBURN
83	12	CASWELL WAGONER & PHYLLIS WAGONER
84	12,13	LIFT BODIES INC
85, 85Z	12,13	LEAH ZETTELMEIER & DIRK ZETTELMEIER
86	13	RALPH FRAZIER
87	13	TRAVIS QUEEN, JACK RANDLE QUEEN & SHEILA QUEEN NUNN
88	13,14	SHEILA & RONNIE CHURCH
89, 89Z	13,14	RAUL RIVAS
90, 90Z	14	CHRISTOPHER WATSON
91	13,14	ROYALE LAZENBY
92	14,15	F C JOHNSON HEIRS
93	14	ALICE PREVETTE
94	14,15	ROBERT WYATT
95	15,16	MARGIE WYATT
96	15	RICHARD HOLLOWAY
97	15,16	ALAN JOHNSON
98	15,16	F C JOHNSON HEIRS
99	15,16	GOTI, INC
100	16,20	AAMA INVESTMENTS, LLC
100A	16	RALPH THOMAS FRAZIER
101	16,20	AAMA INVESTMENTS, LLC
102	16	BRUCE EVANS & DEBRA EVANS
103	16,17,19	STEPHEN JARVIS & MARGARET JARVIS
104	16	THERMOGAS COMPANY
105	16,17,20	T. CAMERON FINLEY & TAMELA FINLEY
106	17	T. CAMERON FINLEY & TAMELA FINLEY
107, 107Z	17	CARL B. RENFRO, JR.
108, 108Z	17	HARVEST TIME FELLOWSHIP
109	17	KNOTVILLE VOLUNTEER FIRE DEPARTMENT, INC
110	17	JOHN CHURCH & NANCY CHURCH
111	17	DON HAYES
126	4	J & L REAL ESTATE HOLDINGS LLC
128	4	JOHNSON OIL AND TRACTOR INC
136	4	INDUSTRIAL CENTERS LLC
137	4	CHRISTOPHER ROBERTS & TIMBERLI ROBERTS
143	7	GWYN KILBY
155	14	JAMES TRICE & PATRICIA TRICE
156	14	VICTOR GARCIA
157	14	FELIPE MORA & BERTHA MORA
158	14	CARL YOUNCE & JULIE YOUNCE
161A	19	OTHO BRIAN WYATT
161B	16,19	JOHN LEWIS WYATT JR
162	19	JAMES JONES
163	19	LYNNE CAUDILL
163A	19	AVERY CAUDILL & LYNNE CAUDILL
164	16,19	H & E MOTORS INC
165	16,20	FERRELGAS, LP
166, 166Z	17,20	SAMARITAN'S PURSE
167	16,20	KELSEY ROYAL
168	20	KIRK WALKER & KIMBERLY WALKER
169	20	BRITO DURAN
170	20	THOMAS AIKEN
171	20	GARY TEAGUE & CHRISTINA TEAGUE
172	20	LIBERTY GROVE BAPTIST CHURCH INC.
173	20	STEVEN SHUMATE & PATRICIA SHUMATE
178	9	RALPH HOUSTON ROYAL & REBEKAH DONNA YORK LIFE ESTATE
180	10	FRED A. REAVES, JR & KAREN W. REAVES & DONNA REEVES KEY

DocuSign Envelope ID: DA518730-DB21-4CE9-928C-9D938A62EA59

PROJECT REFERENCE NO.	SHEET NO.
R-2603	4
R/W SHEET NO.	

ROADWAY DESIGN ENGINEER — NORTH CAROLINA PROFESSIONAL SEAL 19724 — ENGINEER — DAVID BURKE EVANS — RC4AA22600AAAA — 8/10/2015

HYDRAULICS ENGINEER — NORTH CAROLINA PROFESSIONAL SEAL 21656 — ENGINEER — KONRAD S. MCALADON — D8C49F05C0444A0 — 8/10/2015

M A Engineering Consultants, Inc.
NC License: F-0160
598 East Chatham Street Suite 137 Cary, NC 27511
Phone: 919.297.0220 Fax: 919.297.0221

REVISIONS

8/17/99

-Y1-
PI Sta 23+28.47
Δ = 77° 54' 10.1" (RT)
D = 4° 56' 12.7"
L = 1,577.98'
T = 938.18'
R = 1,160.57'
V = 40 mph
SE = 0.04

-Y1A-
PI Sta 25+89.02
Δ = 39° 59' 55.8" (RT)
D = 10° 25' 02.7"
L = 383.96'
T = 200.18'
R = 550.00'
V = 40 mph
SE = 0.04

-Y2-
PI Sta 16+75.47
Δ = 59° 58' 51.1" (RT)
D = 19° 05' 54.9"
L = 314.06'
T = 173.14'
R = 300.00'
V = STOP CONDITION
SE = SEE PLANS

NAD 83/95

DETAIL BC3
SPECIAL BACK OF CURB CUT DITCH
(NOT TO SCALE)
NATURAL GROUND — DEPTH = 1' — 2:1 — 3:1
FROM -Y1- STA. 22+40 TO STA. 24+00 RT

DETAIL PR1
PIPE OUTLET RIP RAP
(Not to Scale)
Natural Ground — MIN 2:1 — d — GEOTEXTILE — VARIABLE — Channel Bed — MIN 2:1 — Natural Ground — TIE TO EXISTING CHANNEL BANK
LINER TYPE – CLASS 'I' RIP RAP — LENGTH = 18 FT.
EST. 26 TONS & 50 SY GEOTEXTILE — d= 3 Ft.
-Y2- STA. 19+30 LT

BEGIN T.I.P. PROJECT R-2603
-L- POT 10+38.67

-L- POT Sta. 10+00.00

-L- STA.10+48.97
BEGIN 2'-6" C&G

-L- STA.10+25.08
BEGIN 2'-6" C&G & 5' CONC.SIDEWALK

-Y2- POT Sta.14+65.00
-L- POT Sta.14+65.00

-Y2- PC Sta.15+02.33=
-L- POT Sta.15+02.33

-Y1A- POC Sta. 24+48.58=
-Y2- POC Sta. 17+37.19

-Y1- POC Sta. 24+52.75=
-Y2- POC Sta. 17+71.19

-Y1A- PT Sta. 27+72.80=
-L- POT Sta. 20+19.69 (5.50' LT)

-Y2- PT Sta. 18+16.39

-Y1A- PC Sta. 23+88.84

-Y2- POT Sta. 19+88.82

END CONSTRUCTION
-Y2- POT 19+30.00
S 49° 41' 21.1" E

-Y1A- POT Sta. 21+58.06 LAE
-Y1- POC Sta. 21+58.06

MATCH LINE -Y1- STA.20+00 SEE SHEET NO.18

MATCH LINE -Y1A- STA.29+53.11 -L- STA.22+00 -Y1- STA.29+32.91 SEE SHEET NO.5

BEGIN RET. WALL 1
-L- STA. 14+84.73
(49.54' LT)

RET. WALL 1
-L- STA. 14+90.00
(47' LT)

END RET. WALL 1
-L- STA. 16+00.00
(47' LT)

BEGIN RET. WALL 2 &
48" CHAIN LINK FENCE
-Y1A- STA. 28+76.00
(42' LT)

END RET. WALL 2 &
48" CHAIN LINK FENCE
-L- STA. 29+10.00
(40' LT)

RET. WALL 2
-Y1A- STA.
29+05.00
(34.5' LT)

RET. WALL 2
-Y1A- STA.
28+85.00
(34.5' LT)

DO NOT DISTURB VAULT

DO NOT DISTURB PARKING

TIE SS TO EX.CURB

DO NOT DISTURB SIGN

NO CLAIM

INCORRECT DESCRIPTION

INCOMPLETE DESCRIPTION

SPECIAL BACK OF CURB CUT DITCH SEE DETAIL BC3

CLASS 'I' RIP RAP PLACE ON BANKS ONLY SEE DETAIL PR1

427.15 UNIFORM LANE TRANSITION (0 TO 5.5 OFFSET FROM ℄)

SEE INSET FOR RETAINING WALL #3 STATIONING

PLUG 18" @R/W

TIE 24" RCP-III TO EX. RCBC

DO NOT DISTURB

REMOVE 84' OF EX. 18"

EXISTING R/W

NC 268

SR 1525

ELKIN RD

SECOND ST

FLINT HILL RD

WHITE ST

RHODES ST

EDWARD GREENE DB 870 PG 79 DB 891 PG 219 (124)

FIRST STATES INVESTORS 4100D LLC DB 936 PG 244 (125)

J & L REAL ESTATE HOLDINGS LLC DB 1048 PG 174 (126)

INDUSTRIAL CENTERS LLC DB 1036 PG 213 (136)

JC FAW DB 1025 PG 474 (127)

CONRAD REEVES DB 827 PG 673 (129)

JOHNSON OIL AND TRACTOR INC DB 554 PG 451 DB 866 PG 159 (128)

CONNARD LLC DB 1104 PG 32 (130)

DUNCAN ELECTRIC CO DB 536 PG 26 (135)

CHRISTOPHER ROBERTS TIMBERLI ROBERTS DB 868 PG 385 (137)

JAMES BROWN ELLAGRENE BROWN DB 561 PG 402 (15)

MACK BROWN WILLA BROWN DB 807 PG 278 (13)

DAVID PENDRY & MAROLYN PENDRY DB 930 PG 212 (131)

KAJAN LLC NO DEED REFERENCE PB 9 PG 407 (14)

COMMUNITY ONE BANK DB 952 PG 399 (16)

CARL BYRD DB 819 PG 282 (17)

GARY LACKEY ELLEN LACKEY DB 602 PG 549 (18Z) (18)

LADD FURNITURE INC DB 599 PG 521 (19)

CHARLES B. BUSH JR. DB 1128 PG 352 (176)

JOHN MCNEIL DONNA MCNEIL DB 771 PG 425 (20)

BM2

RETAINING WALL #3 INSET

BEGIN RET. WALL 3 & 48" CHAIN LINK FENCE
-Y1- STA. 29+00.00
(44.80' RT)

END RET. WALL 3 & 48" CHAIN LINK FENCE
-Y1- STA. 29+42.00
(46' RT)

RET. WALL 3
-Y1- STA. 29+08.00
(39' RT)

RET. WALL 3
-Y1- STA. 29+28.00
(39.5' RT)

NOTE: PLACE 48" CHAIN LINK FENCE 1' BEHIND FACE OF WALL 2 & 3

-L- NC 268: 560/700 — 360/500 — 3,960/5,100 — 6,670/8,600
-Y1- NC 268: 4,520/5,800 — 7,000/9,000 — 6,640/8,500
-Y2- SR 2334: 10,270/13,200 — 100/100 — 100/100 — 430/500 — 430/500 — 730/800 — 730/800

UPGRADE EXISTING SIGNAL

CHANNELIZATION RADII ARE 3' UNLESS NOTED OTHERWISE

SEE SHEET 21 FOR -L- PROFILE
SEE SHEET 28 FOR -Y1- PROFILE
SEE SHEET 29 FOR -Y1A- & -Y2- PROFILES
SEE SHEET 2B-5 FOR -Y1-/-Y2- INTERSECTION DETAIL

7/31/2015
r:\r2603_rw\proj\r2603_rdy_psh04.dgn

DocuSign Envelope ID: DA518730-DB21-4CE9-928C-9D938A62EA59

PROJECT REFERENCE NO.	SHEET NO.
R-2603	5
R/W SHEET NO.	

ROADWAY DESIGN ENGINEER — NORTH CAROLINA PROFESSIONAL SEAL 19724 ENGINEER — DAVID BURKE EVANS — 8/10/2015

HYDRAULICS ENGINEER — NORTH CAROLINA PROFESSIONAL SEAL 21656 ENGINEER — RONALD ROBERT MEADOW — 8/10/2015

M A Engineering Consultants, Inc.
NC License: F-0160
598 East Chatham Street Suite 137 Cary, NC 27511
Phone: 919.297.0220 Fax: 919.297.0221

REVISIONS

8/17/99

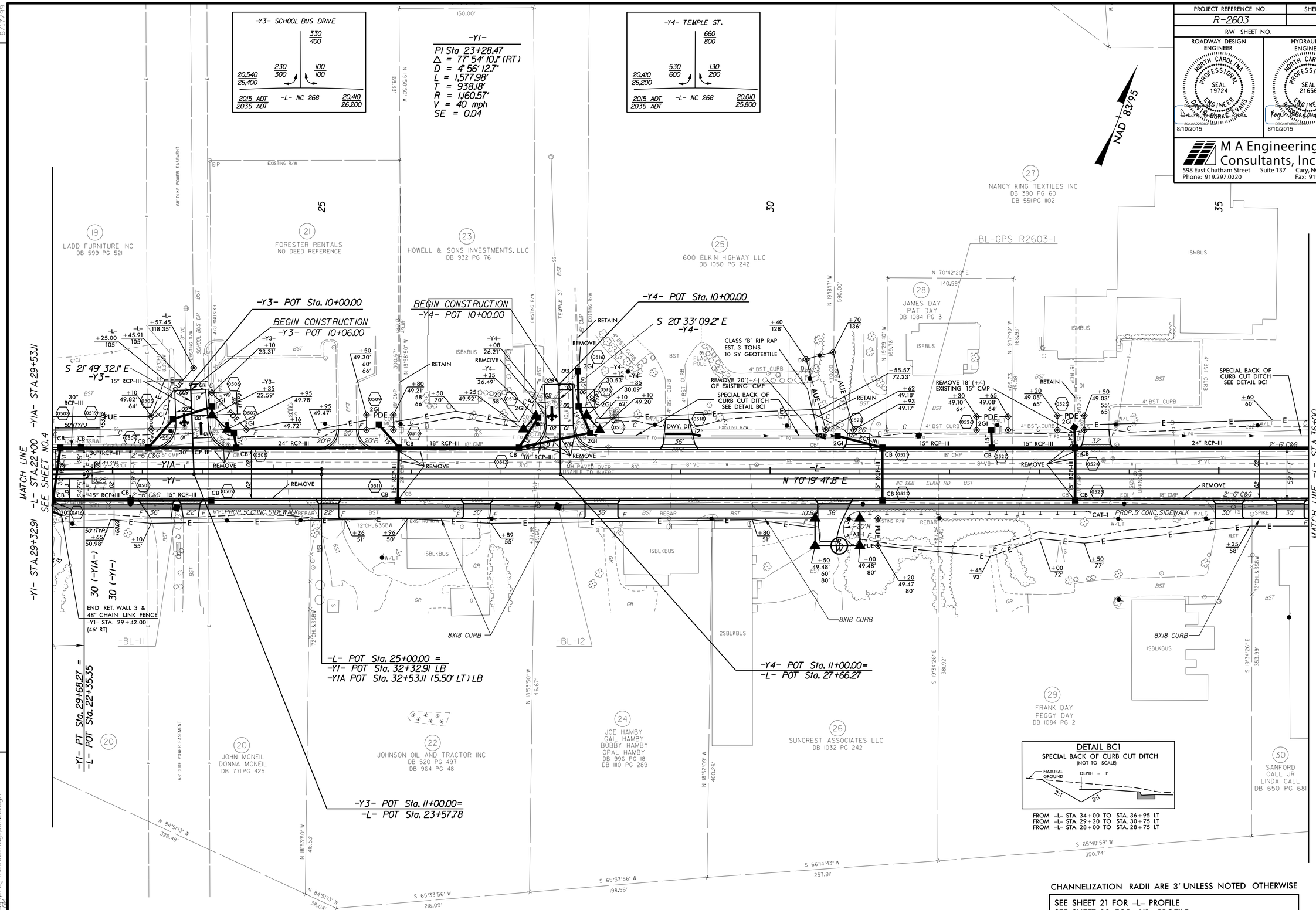

CHANNELIZATION RADII ARE 3' UNLESS NOTED OTHERWISE

SEE SHEET 21 FOR -L- PROFILE
SEE SHEET 29 FOR -Y3- PROFILE
SEE SHEET 30 FOR -Y4- PROFILE
SEE SHEET 2B-5 FOR -Y3- & -Y4- INTERSECTION DETAILS

7/31/2015
R:\Roadway\Proj\R2603_Rdy_psh05.dgn

DocuSign Envelope ID: DBC18246-4420-4282-8FE8-55CD8D86B2CF

PROJECT REFERENCE NO.	SHEET NO.
R-2603	6
R/W SHEET NO.	

ROADWAY DESIGN ENGINEER
NORTH CAROLINA PROFESSIONAL SEAL 19724 ENGINEER
DAVID BURKE EVANS
DocuSigned by: 9C4AA2280B5148...
8/10/2015

HYDRAULICS ENGINEER
NORTH CAROLINA PROFESSIONAL SEAL 21656 ENGINEER
RONALD SCOTT WEADON
DocuSigned by: DBC48F0550044A0...
8/10/2015

M A Engineering Consultants, Inc.
NC License: F-0160
598 East Chatham Street Suite 137 Cary, NC 27511
Phone: 919.297.0220 Fax: 919.297.0221

REVISIONS

8/17/99

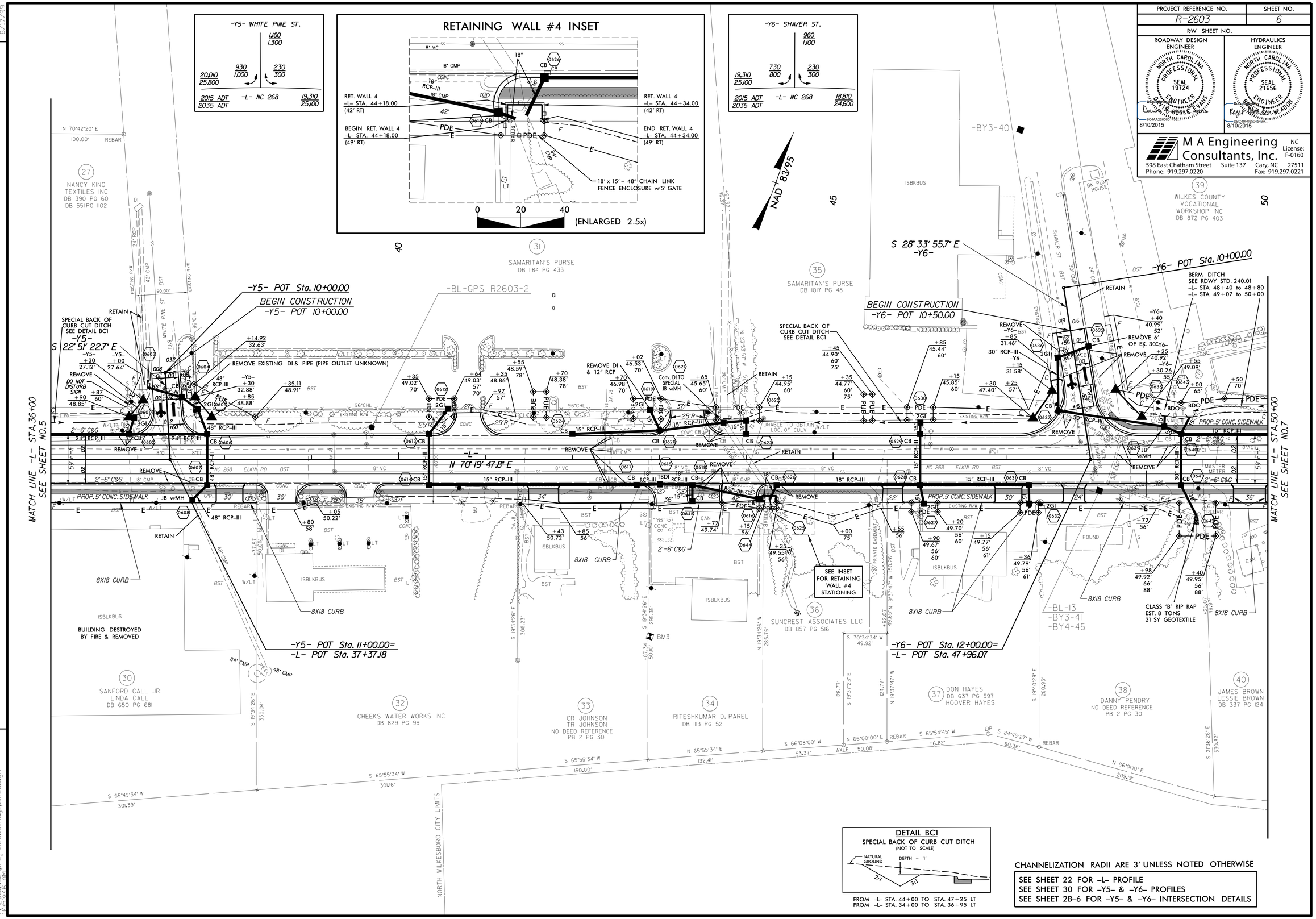

CHANNELIZATION RADII ARE 3' UNLESS NOTED OTHERWISE

SEE SHEET 22 FOR -L- PROFILE
SEE SHEET 30 FOR -Y5- & -Y6- PROFILES
SEE SHEET 2B-6 FOR -Y5- & -Y6- INTERSECTION DETAILS

8/10/2015
12:19:34 PM
C:\pwworking\proj\R2603_Rdy_psh06.dgn

DocuSign Envelope ID: DA518730-DB21-4CE9-928C-9D938A62EA59

PROJECT REFERENCE NO.	SHEET NO.
R-2603	7
R/W SHEET NO.	

ROADWAY DESIGN ENGINEER — NORTH CAROLINA PROFESSIONAL SEAL 19724 — DAVID B. BURKE EVANS — 8/10/2015

HYDRAULICS ENGINEER — NORTH CAROLINA PROFESSIONAL SEAL 21656 — RANDY R. WEADON — 8/10/2015

M A Engineering Consultants, Inc. NC License: F-0160
598 East Chatham Street Suite 137 Cary, NC 27511
Phone: 919.297.0220 Fax: 919.297.0221

REVISIONS 8/17/99

-DRIVE2-	-L-	-Y7-	-Y8-	
PI Sta 10+80.26	PI Sta 56+52.52	PI Sta 12+21.83	PI Sta 13+79.92	PI Sta 11+25.82 / PI Sta 13+14.76
Δ = 49° 19' 35.8" (LT)	Δ = 30° 47' 48.8" (LT)	Δ = 95° 46' 59.7" (RT)	Δ = 82° 10' 24.6" (LT)	Δ = 4° 08' 45.3" (LT) / Δ = 54° 46' 55.0" (LT)
D = 127° 19' 26.2"	D = 3° 28' 20.9"	D = 95° 29' 34.7"	D = 88° 08' 50.5"	D = 4° 17' 44.9" / D = 21° 05' 58.3"
L = 38.74'	L = 886.89'	L = 100.30'	L = 93.22'	L = 96.51' / L = 259.64'
T = 20.66'	T = 454.44'	T = 66.38'	T = 56.68'	T = 48.28' / T = 140.70'
R = 45.00'	R = 1,650.00'	R = 60.00'	R = 65.00'	R = 1,333.76' / R = 271.55'
	V = 50 mph	V < 15 mph	V = STOP CONDITION	V = STOP CONDITION
	SE = 0.04	SE = 0.02	SE = 0.02	SE = SEE PLANS

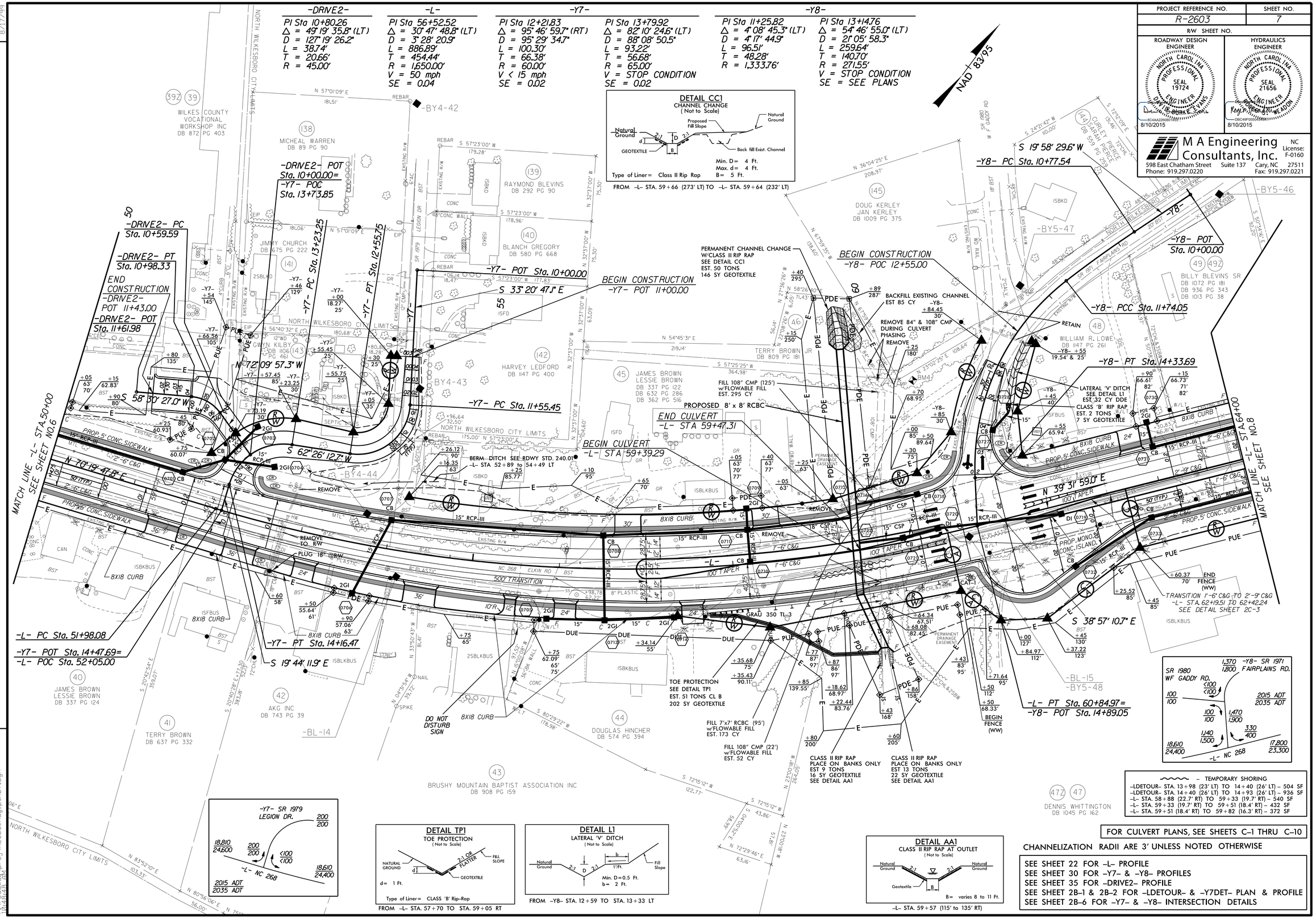

DETAIL TP1
TOE PROTECTION
(Not to Scale)
NATURAL GROUND — FILL SLOPE — 2:1 OR FLATTER — GEOTEXTILE
d= 1 Ft.
Type of Liner= CLASS 'B' Rip-Rap
FROM -L- STA. 57+70 TO STA. 59+05 RT

DETAIL L1
LATERAL 'V' DITCH
(Not to Scale)
Natural Ground — Fill Slope
Min. D=0.5 Ft.
b= 2 Ft.
FROM -Y8- STA. 12+59 TO STA. 13+33 LT

DETAIL AA1
CLASS II RIP RAP AT OUTLET
(Not to Scale)
Natural Ground — Geotextile
B= varies 8 to 11 Ft.
-L- STA. 59+57 (115' to 135' RT)

~~~ - TEMPORARY SHORING

-LDETOUR- STA. 13+98 (23' LT) TO 14+40 (26' LT)	504 SF
-LDETOUR- STA. 14+40 (26' LT) TO 14+93 (26' LT)	936 SF
-L- STA. 58+88 (22.7' RT) TO 59+33 (19.7' RT)	540 SF
-L- STA. 59+33 (19.7' RT) TO 59+51 (18.4' RT)	432 SF
-L- STA. 59+51 (18.4' RT) TO 59+82 (16.3' RT)	372 SF

FOR CULVERT PLANS, SEE SHEETS C-1 THRU C-10

CHANNELIZATION RADII ARE 3' UNLESS NOTED OTHERWISE

SEE SHEET 22 FOR -L- PROFILE
SEE SHEET 30 FOR -Y7- & -Y8- PROFILES
SEE SHEET 35 FOR -DRIVE2- PROFILE
SEE SHEET 2B-1 & 2B-2 FOR -LDETOUR- & -Y7DET- PLAN & PROFILE
SEE SHEET 2B-6 FOR -Y7- & -Y8- INTERSECTION DETAILS

7/31/2015
17:19:06 pb\proj\R2603_Rdy_psh07.dgn
~~~

DocuSign Envelope ID: DA518730-DB21-4CE9-928C-9D938A62EA59

8/17/99

REVISIONS

PROJECT REFERENCE NO.	SHEET NO.
R-2603	8
R/W SHEET NO.	

ROADWAY DESIGN ENGINEER
NORTH CAROLINA PROFESSIONAL SEAL 19724 ENGINEER DAVID BURKE EVANS
8C4AA22B0B8F4A8...
8/10/2015

HYDRAULICS ENGINEER
NORTH CAROLINA PROFESSIONAL SEAL 21656 ENGINEER ROBERT A. WEADON
D8C49F05B...
8/10/2015

M A Engineering Consultants, Inc.
NC License: F-0160
598 East Chatham Street Suite 137 Cary, NC 27511
Phone: 919.297.0220 Fax: 919.297.0221

DETAIL L1
LATERAL 'V' DITCH
(Not to Scale)

Natural Ground, 2:1, D, 2:1, b, 1'/ft., Fill Slope

Min. D=0.5 Ft.
b= 2 Ft.

FROM –L– STA. 73+10 TO STA. 78+00 LT
FROM –L– STA. 74+85 TO STA. 77+00 RT

DETAIL T1
STANDARD BASE DITCH
(Not to Scale)

Natural Ground, 2:1, D, 2:1, Natural Ground, B

Min. D=1 Ft.
B=2 Ft.

FROM –L– STA. 65+27 (60' RT) TO 65+25 (86' RT)
FROM –L– STA. 70+87 (58' RT) TO 70+94 (87' RT)

–L–
PI Sta 73+85.60
Δ = 30° 40' 58.7" (RT)
D = 1° 59' 46.9"
L = 1,536.94'
T = 787.38'
R = 2,870.00'
V = 50 mph
SE = 0.03

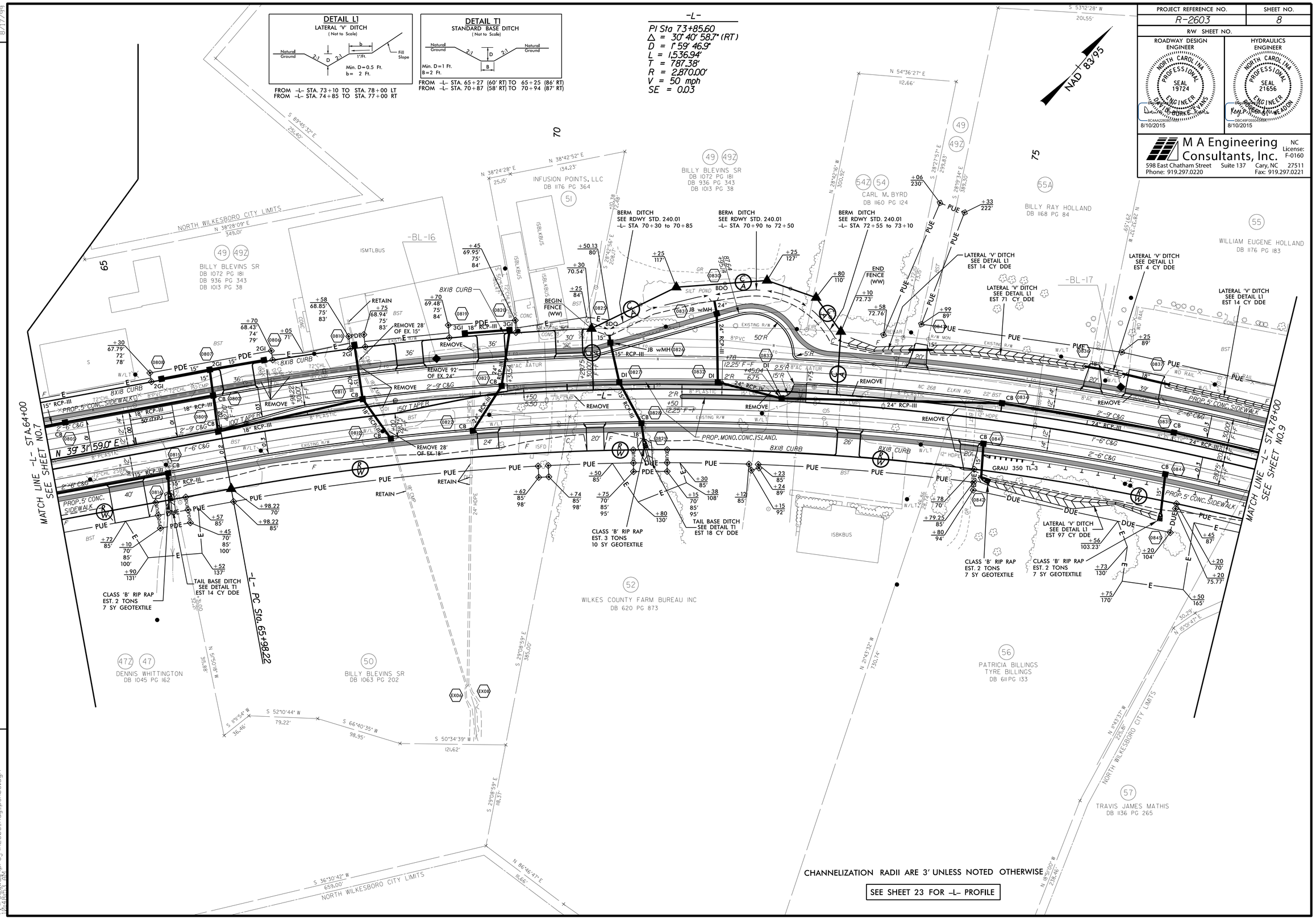

7/31/2015
I:\R2603_Rdy\proj\R2603_Rdy_psh08.dgn

DocuSign Envelope ID: DA518730-DB21-4CE9-928C-9D938A62EA59

PROJECT REFERENCE NO.	SHEET NO.
R-2603	9
R/W SHEET NO.	

ROADWAY DESIGN ENGINEER — NORTH CAROLINA PROFESSIONAL SEAL 19724 — DAVID BURKE EVANS — 8/10/2015

HYDRAULICS ENGINEER — NORTH CAROLINA PROFESSIONAL SEAL 21656 — KYLE R. WELDON — 8/10/2015

M A Engineering Consultants, Inc.
NC License: F-0160
598 East Chatham Street Suite 137 Cary, NC 27511
Phone: 919.297.0220 Fax: 919.297.0221

REVISIONS

8/17/99

-L-
PI Sta 73+85.60
△ = 30° 40' 58.7" (RT)
D = 1° 59' 46.9"
L = 1,536.94'
T = 787.38'
R = 2,870.00'
V = 50 mph
SE = 0.03

DETAIL BC1
SPECIAL BACK OF CURB CUT DITCH
(NOT TO SCALE)
NATURAL GROUND — DEPTH = 1' — 2:1 — 3:1
FROM -L- STA. 82+00 TO STA. 83+50 LT
FROM -L- STA. 83+80 TO STA. 84+50 LT
FROM -L- STA. 84+80 TO STA. 85+80 LT
FROM -L- STA. 90+00 TO STA. 90+65 RT
FROM -L- STA. 91+19 TO STA. 93+50 RT

DETAIL BC2
SPECIAL BACK OF CURB CUT DITCH
(NOT TO Scale)
DEPTH = VAR. — 2:1 — 3:1 — NATURAL GROUND — SEE DITCH PROFILE
FROM -L- STA. 89+14 TO STA. 90+00 RT

DETAIL L1
LATERAL 'V' DITCH
(Not to Scale)
Natural Ground — 2:1 — D — 2:1 — b — 1'-ft. — Fill Slope
Min. D = 0.5 Ft.
b = 2 Ft.
FROM -L- STA. 86+50 TO STA. 87+30 RT

DETAIL PR2
PIPE OUTLET RIP RAP
(Not to Scale)
Natural Ground — MIN. 2:1 — d — GEOTEXTILE — VARIABLE — Channel Bed — TIE TO EXISTING CHANNEL BANK
LINER TYPE – CLASS 'I' RIP RAP
EST. 30 TONS & 60 SY GEOTEXTILE
LENGTH = 10 FT.
d = 4 Ft.
-L- STA. 78+80 RT

-Y10- SR 1981 PEBBLE ST.
<100 <100 — <100 <100 — 17,800 23,300 — 2015 ADT 2035 ADT — -L- NC 268 — 17,800 23,300

NAD 83/95

-Y10- POT Sta. 10+00.00

-L- PT Sta. 81+35.16

-Y9- POT Sta. 10+00.00=
-L- POC Sta. 81+15.36

-DRIVE7- POT Sta. 10+00.00=
-L- POT Sta. 83+40.00

TRANSITION 2'-9" C&G TO 1'-6" C&G
-L- STA. 82+35.16 TO 82+85.16
SEE DETAIL SHEET 2C-3

BEGIN CONSTRUCTION
-Y10- POT 11+56.49

-Y10-
S 18° 38' 44.0" E

MATCH LINE -L- STA.78+00 SEE SHEET NO.8

MATCH LINE -L- STA.92+00 SEE SHEET NO.10

-Y9- PC Sta. 12+29.81

-DRIVE7- PC Sta. 10+63.02

-DRIVE7- POT Sta. 12+01.30

-DRIVE7- PT Sta. 11+02.29

-Y9- PT Sta. 13+07.25

-Y9- POT Sta. 13+34.15

END CONSTRUCTION
-Y9- POT 13+25.00

END CONSTRUCTION
-DRIVE7- POT 11+75.00

-Y10- POT Sta. 13+00.00=
-L- POT Sta. 91+16.25

-L- N 70° 12' 57.7" E

S 19° 47' 02.3" E

N 70° 12' 57.7" E

S 18° 11' 52.6" E
-Y9-

N 73° 04' 10.5" E

PI Sta 12+78.72
△ = 88° 43' 57.0" (LT)
D = 114° 35' 29.6"
L = 77.43'
T = 48.91'
R = 50.00'
V < 15 mph
SE = 0.04

-DRIVE7-
PI Sta 10+88.02
△ = 90° 00' 00.0" (LT)
D = 229° 10' 59.2"
L = 39.27'
T = 25.00'
R = 25.00'

2015 ADT
2035 ADT
-L- NC 268
17,800 23,300
<100 <100 — <100 <100 — <100 <100
-Y9- SIDNEY AVE.

CHANNELIZATION RADII ARE 3' UNLESS NOTED OTHERWISE

SEE SHEET 23 FOR -L- PROFILE
SEE SHEET 31 FOR -Y9- & -Y10- PROFILES
SEE SHEET 36 FOR -DRIVE7- PROFILE
SEE SHEET 2B-3 FOR -Y9DET- PLAN & PROFILE
SEE SHEET 2B-7 FOR -Y9- & -Y10- INTERSECTION DETAILS

7/31/2015

DocuSign Envelope ID: DA518730-DB21-4CE9-928C-9D938A62EA59

PROJECT REFERENCE NO.	SHEET NO.
R-2603	10
R/W SHEET NO.	

ROADWAY DESIGN ENGINEER — NORTH CAROLINA PROFESSIONAL SEAL 19724 — DAVID BURKE EVANS — 8/10/2015

HYDRAULICS ENGINEER — NORTH CAROLINA PROFESSIONAL SEAL 21656 — ROBERT MCCADDEN — 8/10/2015

M A Engineering Consultants, Inc.
NC License: F-0160
598 East Chatham Street Suite 137 Cary, NC 27511
Phone: 919.297.0220 Fax: 919.297.0221

REVISIONS 8/17/99

-L-
PI Sta 105+12.30
Δ = 3° 43' 23.8" (LT)
D = 0° 34' 22.6"
L = 649.84'
T = 325.03'
R = 10,000.00'
V = 50 mph
SE = NC

-Y11-
PI Sta 11+40.06
Δ = 19° 41' 16.8" (RT)
D = 9° 00' 00.0"
L = 218.76'
T = 110.47'
R = 636.62'
V = STOP CONDITION
SE = SEE PLANS

NAD 83/95

-BY7-53

SR 1983 (8' BST) AARON CALL RD

-Y11- POT Sta. 10+00.00

S 35° 21' 20.4" E

-Y11- PC Sta. 10+29.59

74 FRED A. REEVES, JR. DONNA R. KEY DB 224 PG 78 DB 152 PG 206 DB 135 PG 57 DB 526 PG 765 WILL-12E 130

78 HUTCHINSONS LLC DB 734 PG 541

752 75 WILLIAM ELLER ALMEDA ELLER DB 819 PG 515

NORTH WILKESBORO CITY LIMITS N 40°35'56" W 517.28'

BEGIN CONSTRUCTION -Y11- PT 12+48.35

-Y11- PT Sta. 12+48.35

-Y11- POT Sta. 13+96.79= -L- POT Sta. 98+68.56 BRG BK=S 15° 40' 03.6" E

-L- PC Sta. 101+87.26

-BL-GPS R2603-3
-BY8-55

-BL-20
-BY7-54

MATCH LINE -L- STA.92+00 SEE SHEET NO.9

MATCH LINE -L- STA.105+00 SEE SHEET NO.11

LATERAL 'V' DITCH SEE DETAIL L1 EST 81 CY DDE

CLASS 'B' RIP RAP EST. 2 TONS EA. 7 SY GEOTEXTILE EA.

CLASS 'B' RIP RAP EST. 3 TONS 10 SY GEOTEXTILE

LATERAL 'V' DITCH SEE DETAIL L1 EST 19 CY DDE

LATERAL 'V' DITCH SEE DETAIL LR1 EST 12 CY DDE EST. 18 TONS CL B 70 SY GEOTEXTILE

LATERAL 'V' DITCH SEE DETAIL L1 EST 12 CY DDE

PROP. 5' CONC. SIDEWALK

NC 268 ELKIN RD 22' BST

N 70° 12' 57.7" E

S 19° 47' 02.3" E

-L-

100' TAPER

SPECIAL BACK OF CURB CUT DITCH SEE DETAIL BC1

REMOVE 6'+/- OF EXISTING 18" CMP

BEGIN CONSTRUCTION -DRIVE8- POT Sta. 10+00.00

S 20° 07' 59.3" E

-DRIVE8- PC Sta. 10+41.82

-DRIVE8- PT Sta. 10+96.80

N 69° 52' 00.7" E

-DRIVE8- POT Sta. 11+64.89= -DRIVE6- POC Sta.12+40.00

-DRIVE6- POT Sta. 10+00.00= -L- POT Sta.98+56.00

-DRIVE6- PC Sta. 10+53.70

-DRIVE6- PT Sta. 11+12.98

-DRIVE6- PC Sta. 11+65.28

-DRIVE6- PT Sta. 12+66.18

LATERAL 'V' DITCH SEE DETAIL LR1 EST 83 CY DDE EST. 65 TONS CL B 185 SY GEOTEXTILE

DO NOT DISTURB STRUCTURES

-DRIVE6- POT Sta. 13+50.00

END CONSTRUCTION -DRIVE6- POT 13+33.60

S 15° 35' 40.5" W

S 3° 53' 48.6" E

-DRIVE3- POT Sta. 13+59.85

BERM DITCH SEE RDWY STD. 240.01 -L- STA 101+50 to 103+65

BERM DITCH SEE RDWY STD. 240.01 -L- STA 103+72 to 105+40

-DRIVE3- PRC Sta. 11+35.93

-DRIVE3- PCC Sta. 12+86.96

END CONSTRUCTION -DRIVE3- PT Sta. 13+48.52

DO NOT DISTURB TREES

732 73 TP WILKES LLC DB 955 PG 8

76 FRED REEVES DB 802 PG 636

77 FRED REEVES CONSTRUCTION CO INC DB 881 PG 585

79 TAM HUTCHINSON MARY HUTCHINSON DB 734 PG 542

180 FRED A. REEVES, JR. KAREN W. REEVES DONNA REEVES KEY DB 135 PG 057 09 E 250 12 E 130

NORTH WILKESBORO CITY LIMITS

-DRIVE8-
PI Sta 10+76.82
Δ = 90° 00' 00.0" (LT)
D = 163° 42' 08.0"
L = 54.98'
T = 35.00'
R = 35.00'

-DRIVE6-

PI Sta 10+84.32	PI Sta 12+26.37
Δ = 35° 22' 43.1" (RT)	Δ = 81° 25' 09.9" (LT)
D = 59° 40' 59.2"	D = 80° 41' 53.8"
L = 59.28'	L = 100.89'
T = 30.62'	T = 61.09'
R = 96.00'	R = 71.00'

-DRIVE3-

PI Sta 13+22.32	PI Sta 12+12.02
Δ = 70° 32' 36.8" (LT)	Δ = 17° 18' 22.4" (LT)
D = 114° 35' 29.6"	D = 11° 27' 33.0"
L = 61.56'	L = 151.03'
T = 35.37'	T = 76.09'
R = 50.00'	R = 500.00'

CHANNELIZATION RADII ARE 3' UNLESS NOTED OTHERWISE
DRIVEWAY RADII ARE 10' UNLESS NOTED OTHERWISE

-Y11- SR 1983 AARON CALL RD.
1,250 / 1,600
17,800 / 23,300
990 / 1,200
260 / 400
-L- NC 268
16,840 / 22,200
2015 ADT
2035 ADT

DETAIL BC1
SPECIAL BACK OF CURB CUT DITCH
(NOT TO SCALE)
NATURAL GROUND — DEPTH = 1' — 2:1 — 3:1
FROM -L- STA. 90+50 TO STA. 93+50 RT

DETAIL L1
LATERAL 'V' DITCH
(Not to Scale)
Natural Ground — 2:1 — D — 2:1 — b — 1'/Ft. — Fill Slope
Min. D = 0.5 Ft.
b = 2 Ft.
FROM -L- STA. 95+60 TO STA. 96+73 LT
FROM -L- STA. 96+78 TO STA. 98+26 LT
FROM -L- STA. 99+31 TO STA. 99+75 LT

DETAIL LR1
LATERAL 'V' DITCH
(Not to Scale)
Natural Ground — 2:1 — d — D — 2:1 — b — 1'/Ft. — Fill Slope — Geotextile
Min. D = 1.2 Ft.
Max. d = 1 Ft.
b = 2 Ft.
Type of Liner = CLASS 'B' Rip-Rap
FROM -Y11- STA. 12+60 TO STA. 13+30 LT
FROM -DRIVE6- STA. 10+75 TO STA. 12+60 LT

SEE SHEET 24 FOR -L- PROFILE
SEE SHEET 31 FOR -Y11- PROFILE
SEE SHEET 36 FOR -DRIVE6- & -DRIVE8- PROFILES
SEE SHEET 2B-7 FOR -Y11- INTERSECTION DETAIL

7/31/2015
12:42:03 PM \\pr01\R2603_Rdy_psh10.dgn

DocuSign Envelope ID: DBC18246-4420-4282-8FE8-55CD8D86B2CF

PROJECT REFERENCE NO.	SHEET NO.
R-2603	11
R/W SHEET NOS.	11 & 19

ROADWAY DESIGN ENGINEER — NORTH CAROLINA PROFESSIONAL SEAL 19724 — DOUGLAS BURKE EVANS — DBE4A9F0B8D8A4A — 8/10/2015

HYDRAULICS ENGINEER — NORTH CAROLINA PROFESSIONAL SEAL 21656 — KONRAD BRADEN WEADON — DBC49F0550C4584 — 8/10/2015

M A Engineering Consultants, Inc.
NC License: F-0160
598 East Chatham Street Suite 137 Cary, NC 27511
Phone: 919.297.0220 Fax: 919.297.0221

REVISIONS

8/17/99

-L-

PI Sta 105+12.30
△ = 3° 43' 23.8" (LT)
D = 0° 34' 22.6"
L = 649.84'
T = 325.03'
R = 10,000.00'
V = 50 mph
SE = NC

PI Sta 111+52.64
△ = 3° 36' 52.8" (RT)
D = 0° 34' 22.6"
L = 630.88'
T = 315.54'
R = 10,000.00'
V = 50 mph
SE = NC

DETAIL LR1
LATERAL 'V' DITCH
(Not to Scale)

Natural Ground, 2:1, d, D, 2:1, b, 1'-Ft., Fill Slope, Geotextile

Min. D = 1.2 Ft.
Max. d = 1 Ft.
b = 2 Ft.

Type of Liner = CLASS 'B' Rip-Rap

FROM -L- STA. 105+50 TO STA. 108+00 LT

DETAIL L4
LATERAL BASE DITCH
(Not to Scale)

Natural Ground, 2:1, d, D, 2:1, b, 1'-Ft., Fill Slope, GEOTEXTILE, B

*When B is < 6.0'

Min. D = 1 Ft.
Max. d = 1.5 Ft.
B = 2 Ft.
b = 2 Ft.

Type of Liner = CLASS 'B' Rip-Rap

FROM -L- STA. 107+00 TO STA. 108+50 RT
FROM -L- STA. 111+00 TO STA. 111+50 RT
FROM -L- STA. 111+86 TO STA. 113+26 RT
FROM -L- STA. 113+77 TO STA. 117+00 RT

DETAIL LB4
LATERAL BASE DITCH
(Not to Scale)

Natural Ground, 2:1, d, D, 2:1, b, 1'-Ft., Fill Slope, GEOTEXTILE, B

*When B is < 6.0'

Min. D = 0.5Ft.
Max. d = 0.5Ft.
B = 4Ft.
b = 2Ft.

Type of Liner = Class 'B' Rip-Rap

FROM -L- STA. 108+50 TO STA. 109+50 RT

DETAIL EB1
RIP RAP AT BRIDGE BENT AND STREAM EMBANKMENT
(Not to Scale)

PROP. BRIDGE BENT, 2', GEOTEXTILE

Type of Liner = CL II Rip-Rap

-L- STA. 117+03 RT
-L- STA. 117+65 RT

DETAIL TB4
STANDARD BASE DITCH
(Not to Scale)

Natural Ground, 2:1, d, D, 2:1, Natural Ground, Geotextile, B

Min. D = 1 Ft.
Max. d = 1 Ft.
B = 4 Ft.

*When B is < 6.0'

Type of Liner = CLASS 'B' Rip-Rap

FROM -L- STA. 110+79 (114' RT) TO 111+50 (65' RT)

NAD 83/95

MATCH LINE -L- STA.105+00 SEE SHEET NO.10

MATCH LINE -L- STA.119+00 SEE SHEET NO.12

-Y12- POT Sta. 10+00.00=
-L- POC Sta. 105+99.33

-L- PRC Sta. 108+37.10

-L- PT Sta. 114+67.98

CLASS 'B' RIP RAP EST. 5 TONS 14 SY GEOTEXTILE

LATERAL 'V' DITCH SEE DETAIL LR1 EST 117 CY DDE EST. 63 TONS CL B 250 SY GEOTEXTILE

BERM DITCH SEE RDWY STD. 240.01 -L- STA 110+00 to 111+50

PROP. MONO. CONC. ISLAND.

GRADE CUT TO DRAIN

TAPER MED. C&G TO TIE TO EX. OR PROP. BRIDGE CURB

TAPER SBG TO TIE TO EX. BRIDGE CURB

TIE PROP. GR TO EX. STRUCTURE ANCHOR UNITS

CLASS 'II' RIP RAP SEE DETAIL EB1 (STRUCTURE PAY ITEM)

TAPER SBG TO TIE TO EX. BRIDGE CURB

TIE PROP. GR TO EX. STRUCTURE ANCHOR UNITS

BEGIN SBG -L- STA 113+80 LT

BEGIN SBG -L- STA 113+96

N 70° 06' 26.8" E

ATTENUATOR

TYPE B-77

TYPE III

LATERAL BASE DITCH SEE DETAIL L4 EST 62 CY DDE EST. 53 TONS CL B 153 SY GEOTEXTILE

LATERAL BASE DITCH SEE DETAIL LB4 EST 22 CY DDE EST. 34 TONS CL B 100 SY GEOTEXTILE

-DRIVE3- POT Sta. 10+00.00=
-Y12- POT Sta. 11+25.00

CLASS 'B' RIP RAP EST. 8 TONS 21 SY GEOTEXTILE

-DRIVE3- PC Sta. 10+27.86

BERM DITCH SEE RDWY STD. 240.01 -L- STA 103+72 to 105+40

-Y12- PC Sta. 13+02.15

S 52°59' 33.8" W

S 37°02' 26.2" E

DO NOT DISTURB STRUCTURE

LATERAL BASE DITCH SEE DETAIL L4 EST 73 CY DDE EST. 64 TONS CL B 187 SY GEOTEXTILE

LATERAL BASE DITCH SEE DETAIL L4 EST 85 CY DDE EST. 23 TONS CL B 67 SY GEOTEXTILE

TAIL BASE DITCH SEE DETAIL TB4 EST. 45 CY DDE EST. 45 TONS CL B 133 SY GEOTEXTILE

CLASS 'B' RIP RAP EST. 8 TONS 21 SY GEOTEXTILE

CLASS 'B' RIP RAP EST. 2 TONS 7 SY GEOTEXTILE

BEGIN APPROACH SLAB -L- STA 116+35.83

BEGIN BRIDGE -L- STA 116+60.00

END APPROACH SLAB -L- STA 118+34.17

END BRIDGE -L- STA 118+10.00

PSH SEE DETAIL P1 GRADE TO EL. 993 Q10 = 1 cfs

PSH SEE DETAIL P1 Q10 = 1 cfs

-DRIVE3-

REMOVE

-Y12- PT Sta. 16+25.02

-Y12- PC Sta. 17+22.32

-DRIVE3-
PI Sta 10+83.25
△ = 30° 57' 35.7" (RT)
D = 28° 38' 52.4"
L = 108.07'
T = 55.39'
R = 200.00'

-Y12-
PI Sta 14+65.34
△ = 20° 33' 15.2" (LT)
D = 6° 21' 58.3"
L = 322.86'
T = 163.19'
R = 900.00'
V = 40 mph
SE = 0.04

PI Sta 18+10.20
△ = 11° 09' 12.9" (LT)
D = 6° 21' 58.3"
L = 175.20'
T = 87.88'
R = 900.00'

END CONSTRUCTION -Y12- PT 16+25.02

HUTCHINSONS LLC DB 734 PG 541

TAM HUTCHINSON MARY HUTCHINSON DB 734 PG 542

FRANK VERNON JOHNSON DB 1135 PG 66 PB 9 PG 537

-BY8-56

-BL-GPS R2603-4

NORTH WILKESBORO CITY LIMITS

MULBERRY CREEK

BRGMCO - DB 646 PG 681 200' POWER EASEMENT

DETAIL P1
PREFORMED SCOUR HOLE
*NOT TO SCALE

PLAN VIEW: Pipe or Ditch Outlet; Square Preformed Scour Hole (PSH); (Rip Rap in basin not shown basin not shown); Reinforced Soil Reinforcement (optional) (RSRM); Install level and flush with natural ground; 4" min. Rip Rap; Stack with outlet stones on outlet pipe

B = 4'
D = 1'
W = 4'

SECTION A-A: FILL SLOPE; PIPE (d = 15" OR 18"); INFLOW; D; PSRM; NATURAL GROUND; LINER: CLASS B RIPRAP WITH FILTER FABRIC; B; MIN. 1' TUCK

308

-L- STA 116+38 (78' LT)
-L- STA 118+39 (65' RT)

17,800
23,300

-L- NC 268

330 / 400 — 100 / 100 — 16,840 / 22,200

2015 ADT 2035 ADT — 430 / 500 — -Y12- SR 2334 FLINT HILL RD.

DRIVEWAY RADII ARE 10' UNLESS NOTED OTHERWISE

SEE SHEET 24 FOR -L- PROFILE
SEE SHEET 32 FOR -Y12- PROFILE
SEE SHEET 2B-7 FOR -Y12- INTERSECTION DETAIL

FOR EXISTING STRUCTURE PLANS, SEE SHEETS S-1 THRU S-5
FOR PROPOSED STRUCTURE PLANS, SEE SHEETS S-6 THRU S-47

- TEMPORARY SHORING
-L- STA. 116+34 (1' RT) TO 116+65 (1' RT) - 186 SF
-L- STA. 118+05 (1' RT) TO 118+37 (1' RT) - 205 SF

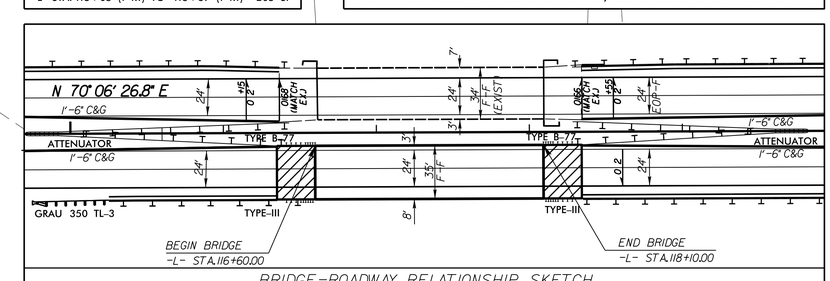

BRIDGE-ROADWAY RELATIONSHIP SKETCH

8/10/2015
12:15:28 PM
J:\proj\R2603_Rdy_psh11.dgn

DocuSign Envelope ID: DA518730-DB21-4CE9-928C-9D938A62EA59

PROJECT REFERENCE NO.	SHEET NO.
R-2603	12
R/W SHEET NO.	

ROADWAY DESIGN ENGINEER — NORTH CAROLINA PROFESSIONAL SEAL 19724 — DAVID BURKE EVANS — 8/10/2015

HYDRAULICS ENGINEER — NORTH CAROLINA PROFESSIONAL SEAL 21656 — RONALD WEADON — 8/10/2015

M A Engineering Consultants, Inc.
NC License: F-0160
598 East Chatham Street Suite 137 Cary, NC 27511
Phone: 919.297.0220 Fax: 919.297.0221

REVISIONS 8/17/99

DETAIL S6
SPECIAL CUT DITCH wHINGE
(Not to Scale)

FROM –L– STA. 126+00 TO STA. 129+00 LT

DETAIL T3
STANDARD BASE DITCH
(Not to Scale)

FROM –L– STA. 128+00 (77' LT) TO 128+37 (90' LT)

–L–

PI Sta 125+26.21
Δ = 4° 20' 33.9" (RT)
D = 0° 28' 38.9"
L = 909.54'
T = 454.99'
R = 12,000.00'
V = 50 mph
SE = NC

PI Sta 135+15.68
Δ = 15° 56' 33.6" (LT)
D = 1° 29' 59.6"
L = 1,062.92'
T = 534.92'
R = 3,820.00'
V = 50 mph
SE = 0.03

–Y13–

PI Sta 11+56.34
Δ = 30° 25' 01.0" (RT)
D = 28° 38' 52.4"
L = 106.18'
T = 54.37'
R = 200.00'

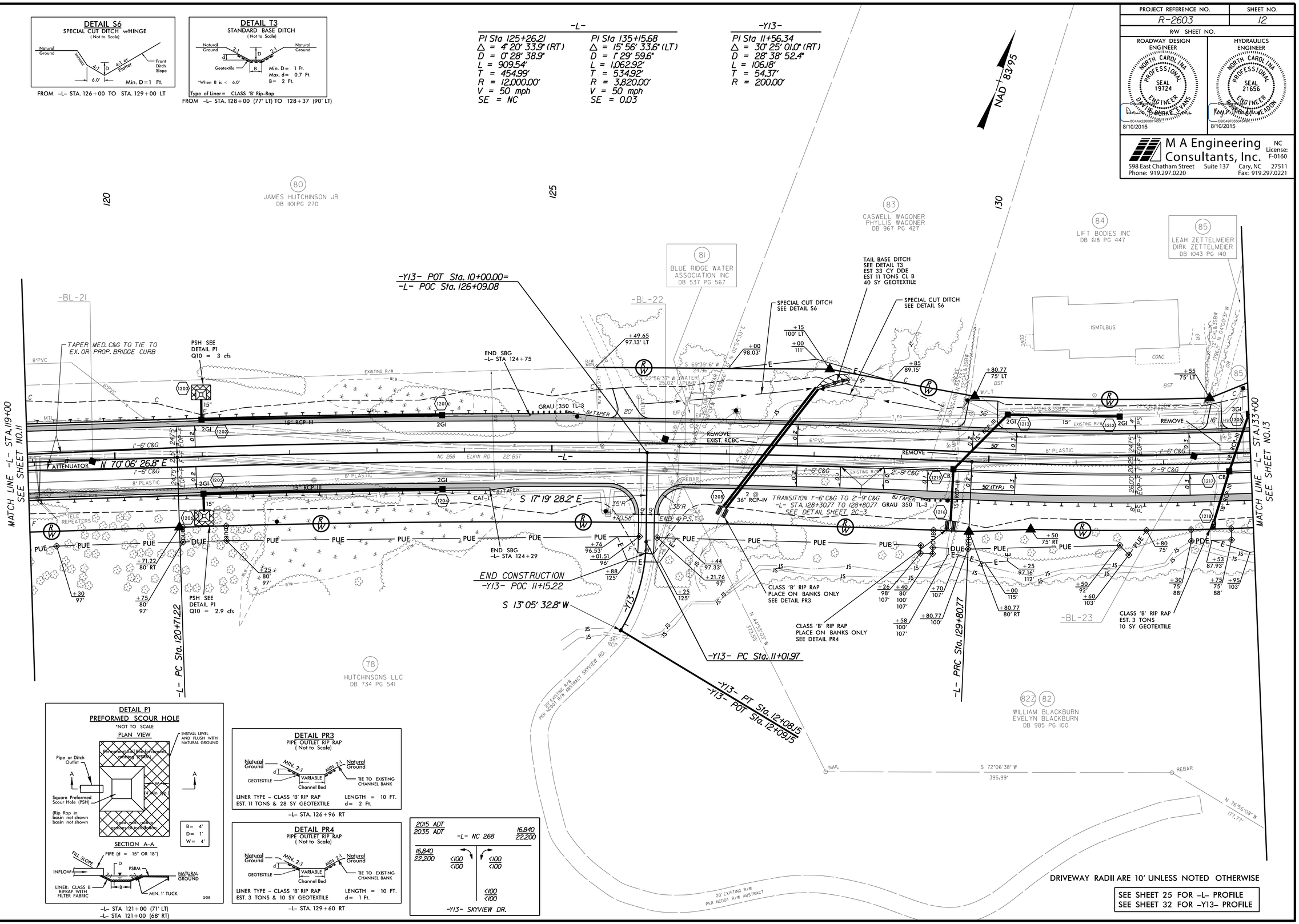

DETAIL P1
PREFORMED SCOUR HOLE
*NOT TO SCALE

–L– STA 121+00 (71' LT)
–L– STA 121+00 (68' RT)

DETAIL PR3
PIPE OUTLET RIP RAP
(Not to Scale)

LINER TYPE – CLASS 'B' RIP RAP — LENGTH = 10 FT.
EST. 11 TONS & 28 SY GEOTEXTILE — d= 2 Ft.

–L– STA. 126+96 RT

DETAIL PR4
PIPE OUTLET RIP RAP
(Not to Scale)

LINER TYPE – CLASS 'B' RIP RAP — LENGTH = 10 FT.
EST. 3 TONS & 10 SY GEOTEXTILE — d= 1 Ft.

–L– STA. 129+60 RT

DRIVEWAY RADII ARE 10' UNLESS NOTED OTHERWISE

SEE SHEET 25 FOR –L– PROFILE
SEE SHEET 32 FOR –Y13– PROFILE

7/31/2015
r:\r2603_sw\proj\R2603_Rdy_psh12.dgn

DocuSign Envelope ID: DA518730-DB21-4CE9-928C-9D938A62EA59

8/17/99

REVISIONS

PROJECT REFERENCE NO.	SHEET NO.
R-2603	13
R/W SHEET NO.	

ROADWAY DESIGN ENGINEER — NORTH CAROLINA PROFESSIONAL SEAL 19724 ENGINEER — DAVID BURKE EVANS — 8/10/2015

HYDRAULICS ENGINEER — NORTH CAROLINA PROFESSIONAL SEAL 21656 ENGINEER — RANDY ROBERT WEADON — 8/10/2015

M A Engineering Consultants, Inc.
NC License: F-0160
598 East Chatham Street Suite 137 Cary, NC 27511
Phone: 919.297.0220 Fax: 919.297.0221

-L-	-Y14-	-DRIVE4-		
PI Sta 135+15.68	PI Sta 10+67.30	PI Sta 10+79.82	PI Sta 12+70.08	PI Sta 13+94.79
Δ = 15° 56' 33.6" (LT)	Δ = 38° 04' 17.3" (RT)	Δ = 72° 46' 33.9" (RT)	Δ = 6° 58' 34.8" (RT)	Δ = 68° 34' 35.1" (LT)
D = 1° 29' 59.6"	D = 11° 37' 11.0"	D = 163° 42' 08.0"	D = 11° 27' 33.0"	D = 114° 35' 29.6"
L = 1,062.92'	L = 53.16'	L = 44.46'	L = 60.88'	L = 59.84'
T = 534.92'	T = 27.60'	T = 25.79'	T = 30.48'	T = 34.09'
R = 3,820.00'	R = 80.00'	R = 35.00'	R = 500.00'	R = 50.00'
V = 50 mph				
SE = 0.03				

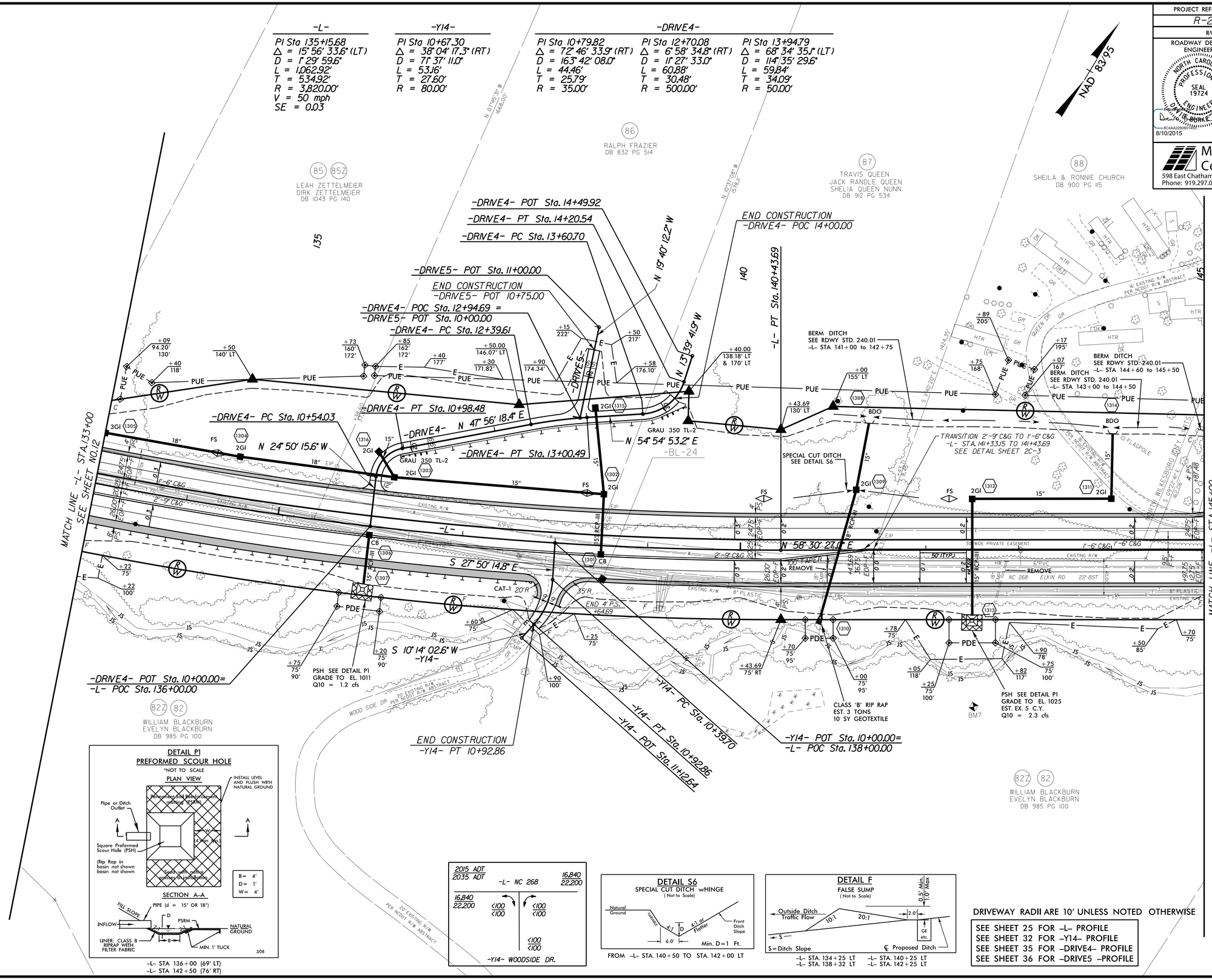

DETAIL P1
PREFORMED SCOUR HOLE

*NOT TO SCALE

-L- STA 136+00 (69' LT)
-L- STA 142+50 (76' RT)

DETAIL S6
SPECIAL CUT DITCH wHINGE
(Not to Scale)

FROM -L- STA. 140+50 TO STA. 142+00 LT

DETAIL F
FALSE SUMP
(Not to Scale)

-L- STA. 134+25 LT
-L- STA. 138+32 LT
-L- STA. 140+25 LT
-L- STA. 142+25 LT

DRIVEWAY RADII ARE 10' UNLESS NOTED OTHERWISE

SEE SHEET 25 FOR -L- PROFILE
SEE SHEET 32 FOR -Y14- PROFILE
SEE SHEET 35 FOR -DRIVE4- PROFILE
SEE SHEET 36 FOR -DRIVE5 -PROFILE

7/31/2015
r:\roadway\proj\R2603_Rdy_psh13.dgn

DocuSign Envelope ID: DA518730-DB21-4CE9-928C-9D938A62EA59

8/17/99

REVISIONS

PROJECT REFERENCE NO.	SHEET NO.
R-2603	14
R/W SHEET NO.	

ROADWAY DESIGN ENGINEER — NORTH CAROLINA PROFESSIONAL SEAL 19724 — DARRYL W. BURKE, P.E. — 8/10/2015

HYDRAULICS ENGINEER — NORTH CAROLINA PROFESSIONAL SEAL 21656 — RONALD E. MCMADDEN — 8/10/2015

M A Engineering Consultants, Inc.
NC License: F-0160
598 East Chatham Street Suite 137 Cary, NC 27511
Phone: 919.297.0220 Fax: 919.297.0221

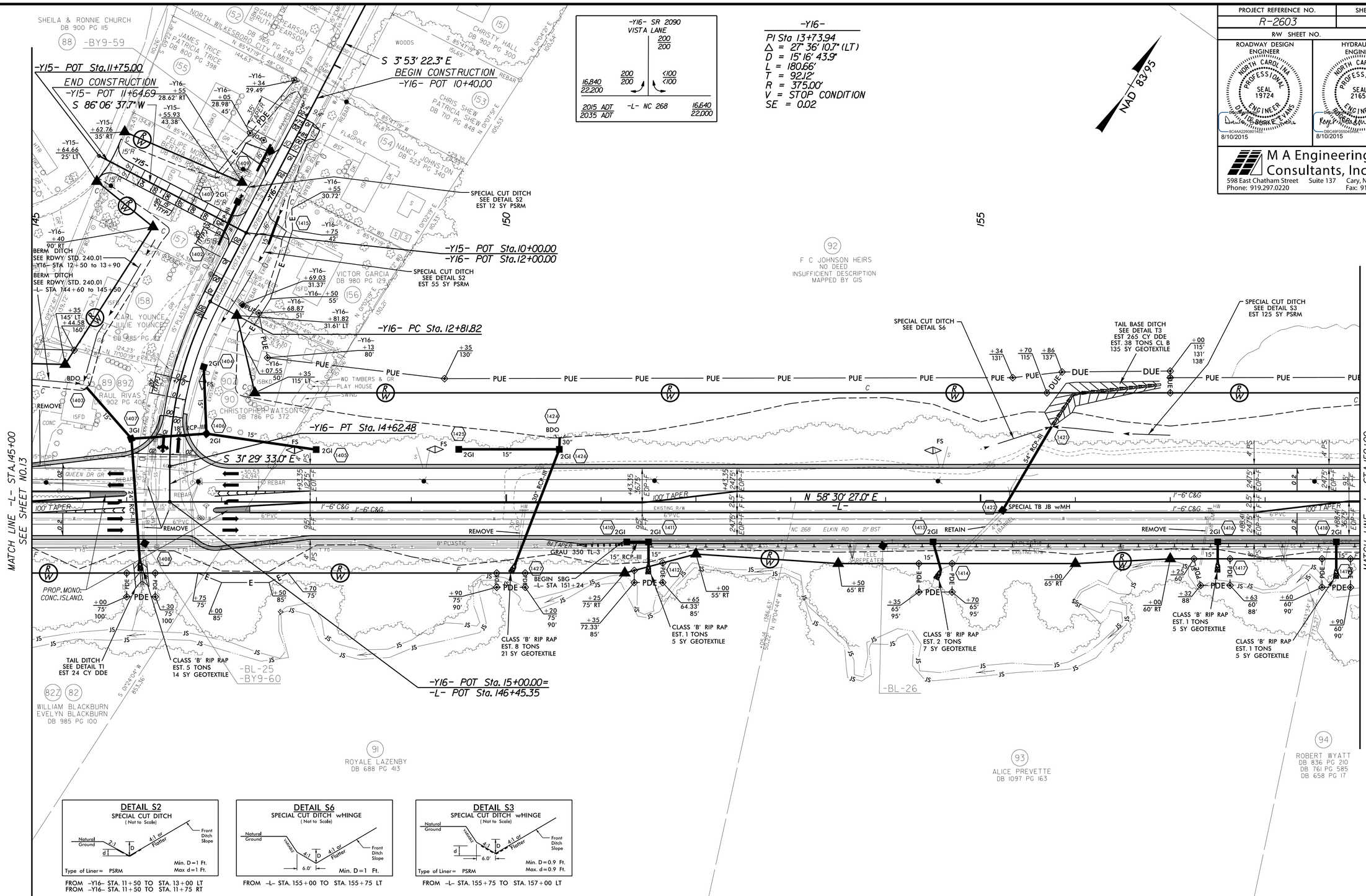

DETAIL S2
SPECIAL CUT DITCH
(Not to Scale)

FROM –Y16– STA. 11+50 TO STA. 13+00 LT
FROM –Y16– STA. 11+50 TO STA. 11+75 RT

DETAIL S6
SPECIAL CUT DITCH w/HINGE
(Not to Scale)

FROM –L– STA. 155+00 TO STA. 155+75 LT

DETAIL S3
SPECIAL CUT DITCH w/HINGE
(Not to Scale)

FROM –L– STA. 155+75 TO STA. 157+00 LT

DETAIL F
FALSE SUMP
(Not to Scale)

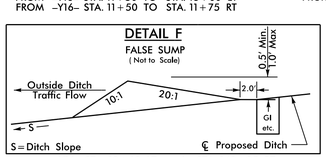

–Y16– STA. 13+68 LT –L– STA. 149+25 RT
–L– STA. 147+75 RT –L– STA. 154+50 RT

DETAIL T1
STANDARD BASE DITCH
(Not to Scale)

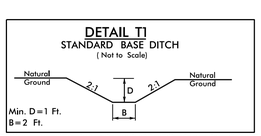

FROM –L– STA. 146+14 (61' RT) TO 146+16 (88' RT)

DETAIL T3
STANDARD BASE DITCH
(Not to Scale)

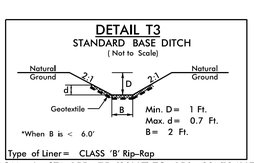

FROM –L– STA. 155+75 (80' LT) TO 156+89 (124' LT)

DRIVEWAY RADII ARE 10' UNLESS NOTED OTHERWISE

SEE SHEET 26 FOR –L– PROFILE
SEE SHEET 32 FOR –Y15– PROFILE
SEE SHEET 33 FOR –Y16– PROFILE
SEE SHEET 2B–4 FOR –Y16DET– PLAN & PROFILE
SEE SHEET 2B–8 FOR –Y16– INTERSECTION DETAIL

7/31/2015
r:\r2603\proj\r2603_rdy_psh14.dgn

DocuSign Envelope ID: DA518730-DB21-4CE9-928C-9D938A62EA59

PROJECT REFERENCE NO.	SHEET NO.
R-2603	15
R/W SHEET NO.	

ROADWAY DESIGN ENGINEER — NORTH CAROLINA PROFESSIONAL SEAL 19724 — DOUGLAS BURKE EVANS — 8/10/2015

HYDRAULICS ENGINEER — NORTH CAROLINA PROFESSIONAL SEAL 21656 — KARL PORTER WEADON — 8/10/2015

M A Engineering Consultants, Inc. NC License: F-0160
598 East Chatham Street Suite 137 Cary, NC 27511
Phone: 919.297.0220 Fax: 919.297.0221

REVISIONS 8/17/99

DETAIL LB1
LATERAL BASE DITCH (Not to Scale)
Natural Ground, 2:1, D, d, 2:1, b, 1'/Ft., B, Fill Slope
Min. D = 1Ft. Max. d = 1Ft. B = 2Ft. b = 2Ft.
Type of Liner = PSRM
FROM –Y17– STA. 11+15 TO STA. 13+00 LT

DETAIL L1
LATERAL 'V' DITCH (Not to Scale)
Natural Ground, 2:1, D, 4:1, b, 1'/Ft., Fill Slope
Min. D = 0.5 Ft. b = 2 Ft.
FROM –Y17– STA. 15+00 TO STA. 16+00 LT

DETAIL S2
SPECIAL CUT DITCH (Not to Scale)
Natural Ground, 2:1, d, D, 4:1 or Flatter, Front Ditch Slope
Min. D = 1 Ft. Max d = 0.5 Ft.
Type of Liner = PSRM
FROM –Y17– STA. 13+00 TO STA. 15+00 LT

–Y17–
PI Sta 13+26.30
Δ = 12° 03' 03.6" (LT)
D = 6° 21' 58.3"
L = 189.30'
T = 95.00'
R = 900.00'
V = 40 mph
SE = 0.04

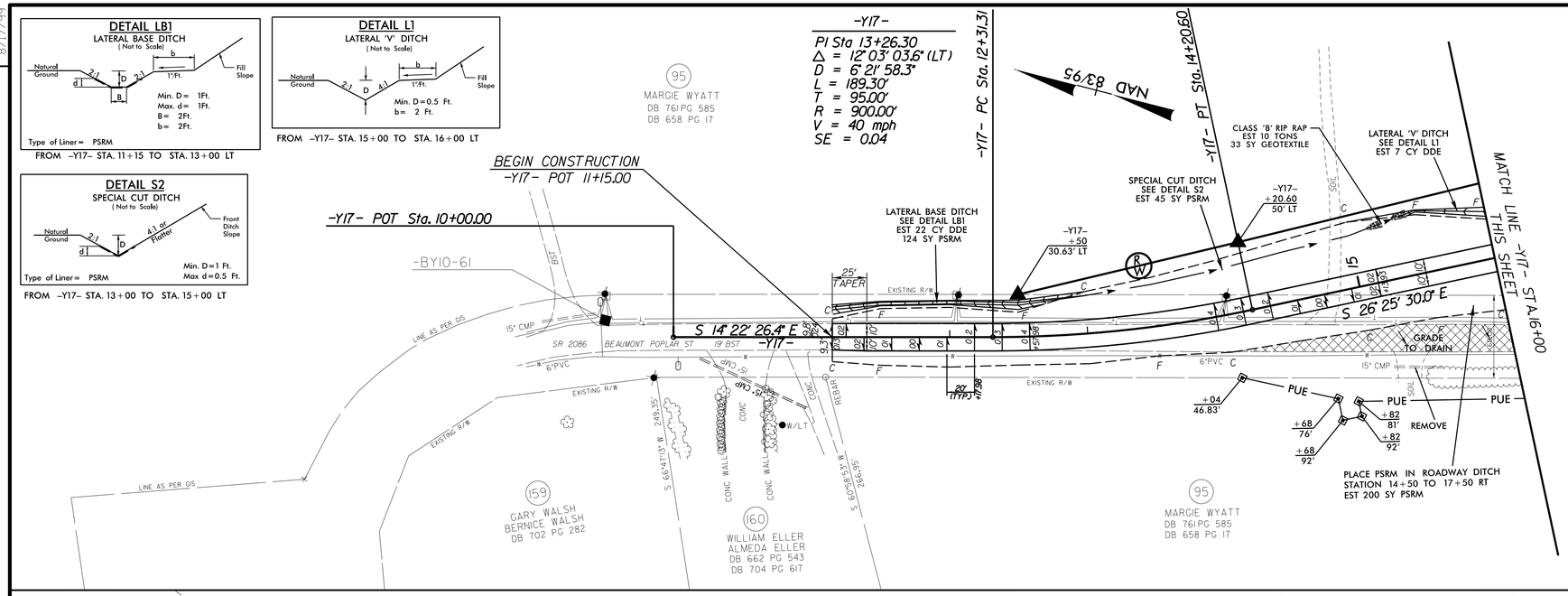

DRIVEWAY RADII ARE 10' UNLESS NOTED OTHERWISE

SEE SHEET 26 FOR –L– PROFILE
SEE SHEET 33 FOR –Y17– PROFILE
SEE SHEET 2B-8 FOR –Y17– INTERSECTION DETAIL

DETAIL S2
SPECIAL CUT DITCH (Not to Scale)
Natural Ground, 2:1, d, D, 4:1 or Flatter, Front Ditch Slope
Min. D = 0.9 Ft. Max d = 0.9 Ft.
Type of Liner = PSRM
FROM –L– STA. 170+50 TO STA. 171+00 LT

DETAIL S3
SPECIAL CUT DITCH w/HINGE (Not to Scale)
Natural Ground, PAVEMENT, 4:1, D, 4:1 or Flatter, 6.0', d, Front Ditch Slope
Min. D = 0.9 Ft. Max. d = 0.9 Ft.
Type of Liner = PSRM
FROM –L– STA. 164+50 TO STA. 167+50 LT
FROM –L– STA. 168+00 TO STA. 170+50 LT

DETAIL S6
SPECIAL CUT DITCH w/HINGE (Not to Scale)
Natural Ground, PAVEMENT, 4:1, D, 4:1 or Flatter, 6.0', Front Ditch Slope
Min. D = 1 Ft.
FROM –L– STA. 160+00 TO STA. 163+00 LT

DETAIL TP1
TOE PROTECTION (Not to Scale)
NATURAL GROUND, d, 2:1 OR FLATTER, FILL SLOPE, GEOTEXTILE
d = 1.5 Ft.
Type of Liner = CLASS 'B' Rip-Rap
FROM –L– STA. 171+50 TO STA. 172+00 LT

DETAIL F
FALSE SUMP (Not to Scale)
0.5' Min. 1.0' Max., 2.0', 20:1, 10:1, Outside Ditch Traffic Flow, S, GI etc.
S = Ditch Slope ℄ Proposed Ditch
–L– STA. 167+84 LT

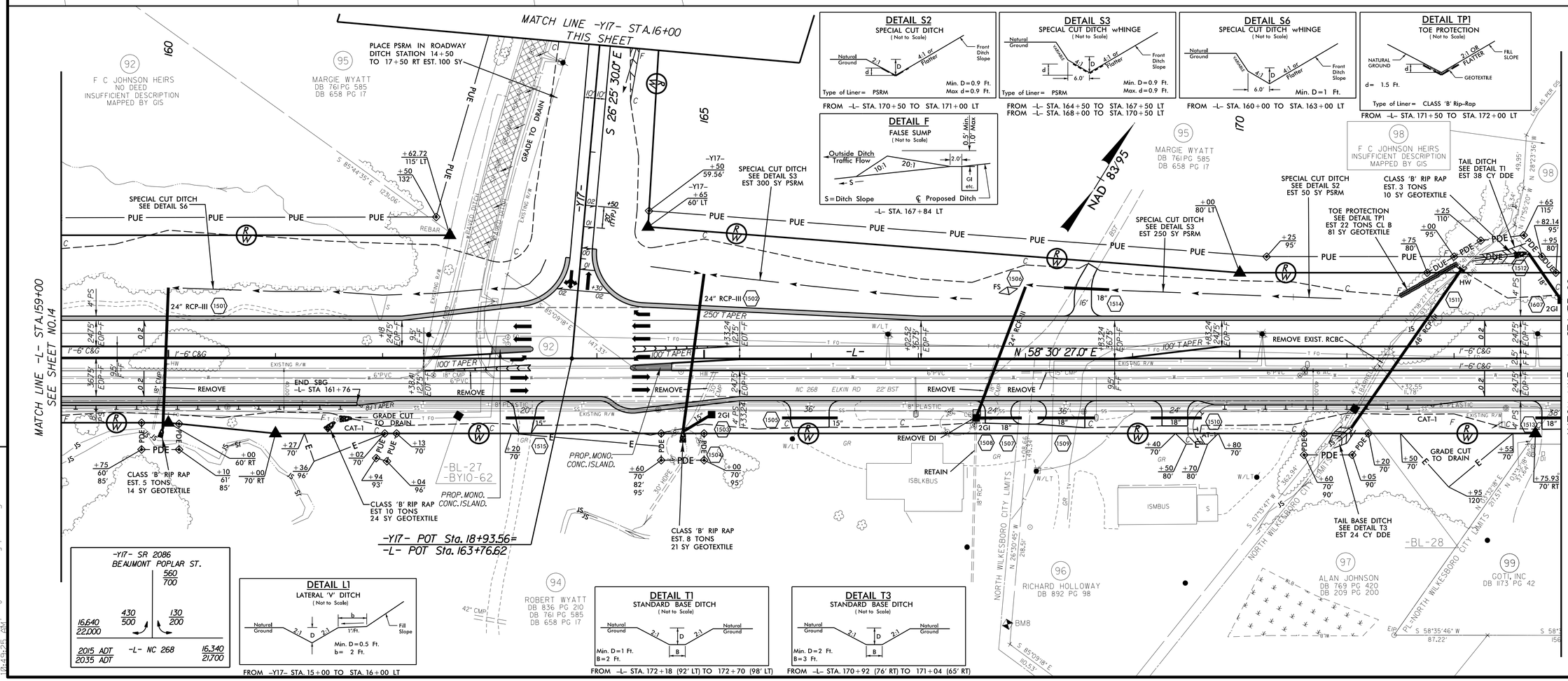

DETAIL L1
LATERAL 'V' DITCH (Not to Scale)
Natural Ground, 2:1, D, 2:1, b, 1'/Ft., Fill Slope
Min. D = 0.5 Ft. b = 2 Ft.
FROM –Y17– STA. 15+00 TO STA. 16+00 LT

DETAIL T1
STANDARD BASE DITCH (Not to Scale)
Natural Ground, 2:1, D, 2:1, B, Natural Ground
Min. D = 1 Ft. B = 2 Ft.
FROM –L– STA. 172+18 (92' LT) TO 172+70 (98' LT)

DETAIL T3
STANDARD BASE DITCH (Not to Scale)
Natural Ground, 2:1, D, 2:1, B, Natural Ground
Min. D = 2 Ft. B = 3 Ft.
FROM –L– STA. 170+92 (76' RT) TO 171+04 (65' RT)

–Y17– SR 2086 BEAUMONT POPLAR ST.
560/700
16,640/22,000 — 430/500 — 130/200
2015 ADT 16,340 / 2035 ADT 21,700 — –L– NC 268

7/31/2015
17BL0026(R)\proj\R2603_Rdy_pshl5.dgn

DocuSign Envelope ID: DA518730-DB21-4CE9-928C-9D938A62EA59

PROJECT REFERENCE NO.	SHEET NO.
R-2603	16
R/W SHEET NO.	

ROADWAY DESIGN ENGINEER — NORTH CAROLINA PROFESSIONAL SEAL 19724 — DAVID BURKE EVANS — RC4AA22600 — 8/10/2015

HYDRAULICS ENGINEER — NORTH CAROLINA PROFESSIONAL SEAL 21656 — RONALD E. MEADOW — D8C49F055 — 8/10/2015

M A Engineering Consultants, Inc.
NC License: F-0160
598 East Chatham Street Suite 137 Cary, NC 27511
Phone: 919.297.0220 Fax: 919.297.0221

DETAIL L3
LATERAL BASE DITCH
(Not to Scale)

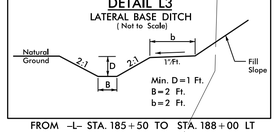

FROM –L– STA. 185+50 TO STA. 188+00 LT

DETAIL S1
SPECIAL CUT DITCH
(Not to Scale)

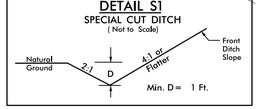

FROM –Y18– STA. 29+50 TO STA. 30+00 LT
FROM –L– STA. 181+50 TO STA. 182+50 RT
FROM –Y18– STA. 31+50 TO STA. 31+61 RT

–L–	–Y18–
PI Sta 184+05.55	PI Sta 23+45.64
Δ = 16° 55' 17.5" (RT)	Δ = 6° 45' 42.6" (LT)
D = 1° 38' 13.3"	D = 0° 29' 53.6"
L = 1,033.68'	L = 1,357.19'
T = 520.63'	T = 679.38'
R = 3,500.00'	R = 11,500.00'
V = 50 mph	V = 50 mph
SE = 0.04	SE = NC

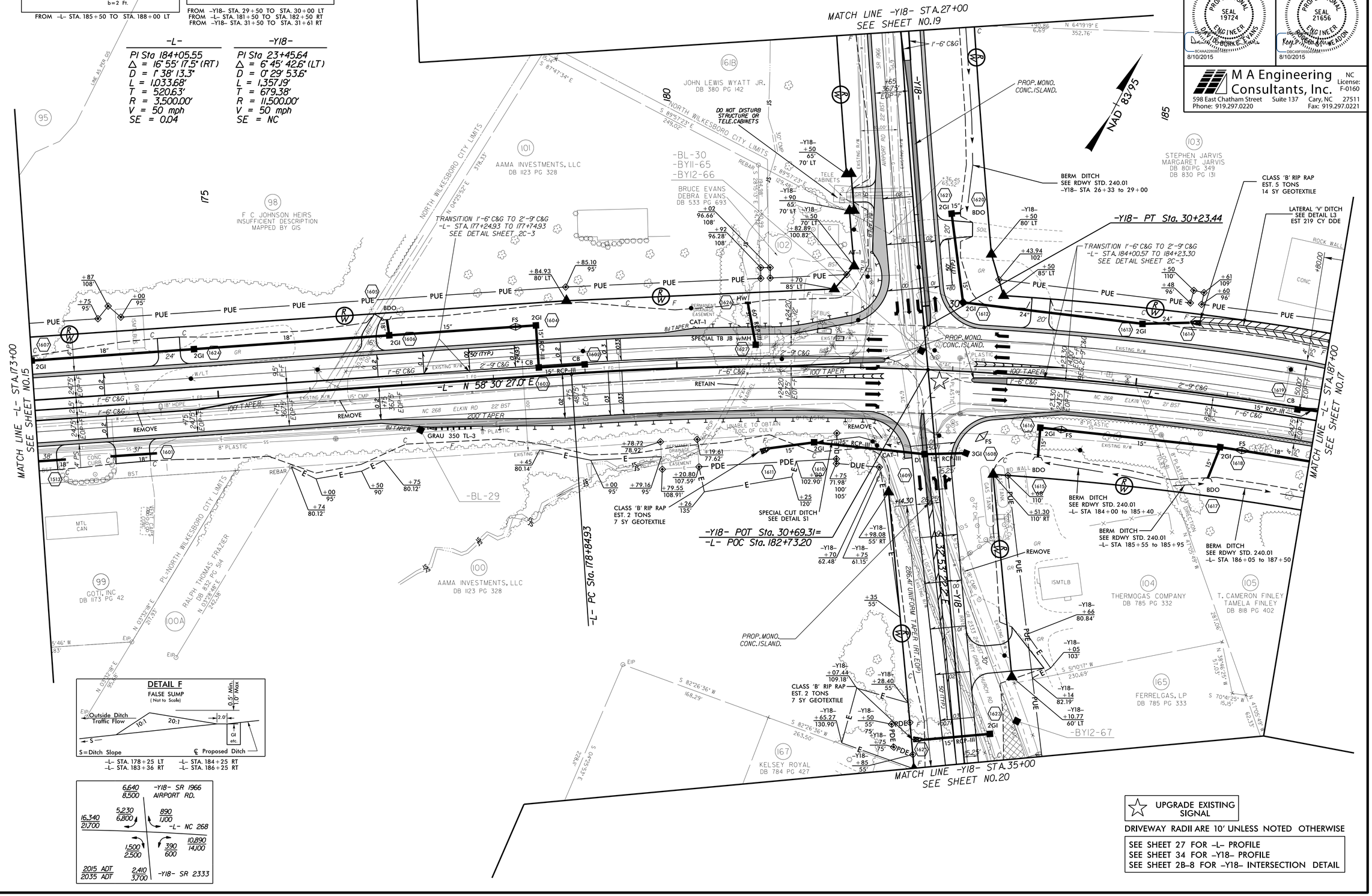

DETAIL F
FALSE SUMP
(Not to Scale)

–L– STA. 178+25 LT
–L– STA. 183+36 RT
–L– STA. 184+25 RT
–L– STA. 186+25 RT

UPGRADE EXISTING SIGNAL

DRIVEWAY RADII ARE 10' UNLESS NOTED OTHERWISE

SEE SHEET 27 FOR –L– PROFILE
SEE SHEET 34 FOR –Y18– PROFILE
SEE SHEET 2B-8 FOR –Y18– INTERSECTION DETAIL

REVISIONS

8/17/99

7/31/2015
R:\Roadway\Proj\R2603_Rdy_psh16.dgn

DocuSign Envelope ID: DA518730-DB21-4CE9-928C-9D938A62EA59

8/17/99

REVISIONS

PROJECT REFERENCE NO.	SHEET NO.
R-2603	17
R/W SHEET NO.	

ROADWAY DESIGN ENGINEER
NORTH CAROLINA PROFESSIONAL SEAL 19724 ENGINEER
DANIEL BURKE EVANS
DocuSigned by: DANIEL BURKE EVANS
8/10/2015

HYDRAULICS ENGINEER
NORTH CAROLINA PROFESSIONAL SEAL 21656 ENGINEER
KONRAD S. MCALADON
DocuSigned by: KONRAD S. MCALADON
8/10/2015

M A Engineering Consultants, Inc.
NC License: F-0160
598 East Chatham Street Suite 137 Cary, NC 27511
Phone: 919.297.0220 Fax: 919.297.0221

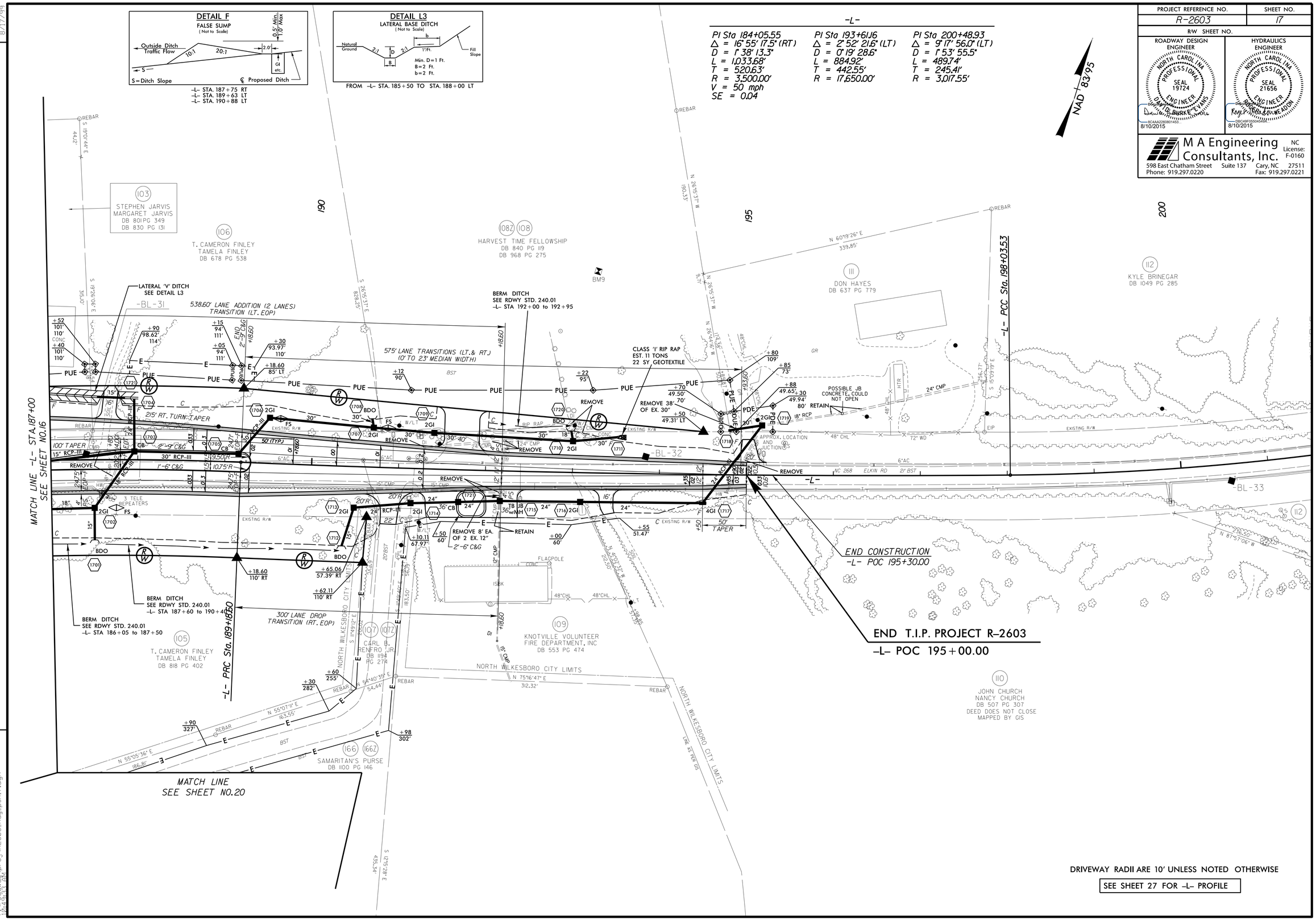

DRIVEWAY RADII ARE 10' UNLESS NOTED OTHERWISE

SEE SHEET 27 FOR -L- PROFILE

7/31/2015
r:\roadway\proj\R2603_Rdy_psh17.dgn

DocuSign Envelope ID: DA518730-DB21-4CE9-928C-9D938A62EA59

PROJECT REFERENCE NO.	SHEET NO.
R-2603	18
R/W SHEET NO.	

ROADWAY DESIGN ENGINEER
NORTH CAROLINA PROFESSIONAL SEAL 19724 ENGINEER
DAVID BURKE EVANS
8/10/2015

HYDRAULICS ENGINEER
NORTH CAROLINA PROFESSIONAL SEAL 21656 ENGINEER
8/10/2015

M A Engineering Consultants, Inc.
NC License: F-0160
598 East Chatham Street Suite 137 Cary, NC 27511
Phone: 919.297.0220 Fax: 919.297.0221

REVISIONS

8/17/99

-Y1-

PI Sta 12+86.70
Δ = 4° 05' 41.6" (RT)
D = 1° 58' 32.6"
L = 207.26'
T = 103.67'
R = 2,900.00'

PI Sta 23+28.47
Δ = 77° 54' 10.1" (RT)
D = 4° 56' 12.7"
L = 1,577.98'
T = 938.18'
R = 1,160.57'
V = 40 mph
SE = 0.04

NAD 83/95

BEGIN CONSTRUCTION
-Y1- POC 13+05.00

-Y1- POT Sta. 10+00.00

BEGIN MILLING & RESURFACING

BEG. 2'-6" C&G TIE TO EX. +00

8X18 CURB

-Y1- +62.26 64'

-Y1- +75 55'

-Y1- +30 49.26'

-Y1- +50 49.69' 63'

-Y1- +60 49.77' 63'

CLASS 'B' RIP RAP EST. 1 TONS 5 SY GEOTEXTILE

REMOVE 42' OF EX. 15'

RETAIN

JB w/MH RCP-III

15" RCP-III

48" CONC CURB

25' TYP.

PROP. 5' CONC. SIDEWALK

BEG. 2'-6" C&G TIE TO EX. DRIVE CURB -Y1- 13+25 RT

REPLACE 2'-6" C&G IN EXISTING LOCATION -Y1- STA.13+25 TO 15+00 RT

-Y1- PC Sta. 11+83.03

-Y1- PCC Sta. 13+90.29

MATCH LINE -Y1- STA.20+00 SEE SHEET NO.4

N 11° 40' 03.9" W

NC 18 / NC 268

NC 18 SECOND ST

NC 268 ELKIN RD

-BYI-36

-BL-9

-BL-8

-BYI-37

(133) NORTH WILKESBORO BPOE DB 301 PG 150 INCORRECT DESCRIPTION

(10) EAC INVESTMENTS LLC DB 1061 PG 210

(12) MCDONALDS REAL ESTATE COMPANY DB 834 PG 262

(13) MACK BROWN WILLA BROWN DB 807 PG 278

(4) RICHARD COLBURN ROXIE COLBURN DB 1027 PG 197

(5) GARLAND STONE DB 859 PG 158

(134) WALTER STONE LORETTA STONE DB 931 PG 33 INCORRECT DESCRIPTION

(9) KAJAN LLC NO DEED REFERENCE PB 9 PG 407

(6) GARY BESHEARS DB 1010 PG 78

(7) FIRST BAPTIST CHURCH CEMETARY DB 1080 PG 265

(8) WORTH WINEBARGER DB 675 PG 314 DB 479 PG 247

(2) YADKIN VALLEY MOTOR CO INC DB 660 PG 945 DB 671 PG 984 INCORRECT DESCRIPTION

(11) WHITE REAL PROPERTY DB 801 PG 91

(14) KAJAN LLC NO DEED REFERENCE PB 9 PG 407

ISBKBUS ISMTLBUS MTL CAN ISFD ISFBUS ISMBUS

UPGRADE EXISTING SIGNAL

CHANNELIZATION RADII ARE 3' UNLESS NOTED OTHERWISE

SEE SHEET 28 FOR -Y1- PROFILE

7/31/2015
10:10:09 AM \proj\R2603_Rdy_psh18.dgn

DocuSign Envelope ID: DA518730-DB21-4CE9-928C-9D938A62EA59

PROJECT REFERENCE NO.	SHEET NO.
R-2603	19
R/W SHEET NO.	20

ROADWAY DESIGN ENGINEER — NORTH CAROLINA PROFESSIONAL SEAL 19724 ENGINEER — DAVID B. BURKE-EVANS — RC4AA226B6B4444... — 8/10/2015

HYDRAULICS ENGINEER — NORTH CAROLINA PROFESSIONAL SEAL 21656 ENGINEER — KAYLA R. MCADEN — D8C49F055B4444... — 8/10/2015

M A Engineering Consultants, Inc.
NC License: F-0160
598 East Chatham Street Suite 137 Cary, NC 27511
Phone: 919.297.0220 Fax: 919.297.0221

REVISIONS 8/17/99

-Y18-

PI Sta 13+38.13
Δ = 22° 53' 33.8" (RT)
D = 3° 26' 28.3"
L = 665.26'
T = 337.13'
R = 1,665.00'

PI Sta 23+45.64
Δ = 6° 45' 42.6" (LT)
D = 0° 29' 53.6"
L = 1,357.19'
T = 679.38'
R = 11,500.00'
V = 60 mph
SE = NC

NAD 83/95

BEGIN CONSTRUCTION
-Y18- POC 17+50.00

-Y18- PRC Sta. 16+66.26

MATCH LINE -Y18- STA. 27+00
SEE SHEET NO. 16

163 LYNNE CAUDILL DB 1085 PG 119

163A AVERY CAUDILL LYNNE CAUDILL DB 1085 PG 118

164 H & E MOTORS INC DB 7219 PG 891

162 JAMES JONES DB 1059 PG 79 DB 865 PG 157 DB 850 PG 474

161 VERNON WYATT ANNA WYATT DB 1062 PG 14

161A OTHO BRIAN WYATT DB 1169 PG 70

161B JOHN LEWIS WYATT JR. DB 380 PG 142

-BYII-63

-BYII-64

SPECIAL CUT DITCH SEE DETAIL S2 EST 45 SY PSRM

SPECIAL CUT DITCH SEE DETAIL S3 EST 300 SY PSRM

SPECIAL CUT DITCH SEE DETAIL S3 EST 320 SY PSRM

BERM DITCH SEE RDWY STD. 240.01 -Y18- STA 26+38 to 29+00

437.5' TRANSITION LT. & RT.

175' TAPER

GRAU 350 TL-3

DO NOT DISTURB POND

CLASS 'B' RIP RAP EST. 5 TONS 14 SY GEOTEXTILE

CLASS 'I' RIP RAP EST. 7 TONS 17 SY GEOTEXTILE

SR 1966 AIRPORT RD 22' BST

DRIVEWAY RADII ARE 10' UNLESS NOTED OTHERWISE

SEE SHEET 34 FOR -Y18- PROFILE

DETAIL F
FALSE SUMP
(Not to Scale)
Outside Ditch Traffic Flow; 10:1; 20:1; 2.0'; 0.5' Min. 1.0' Max; Gl etc.; S = Ditch Slope; ℄ Proposed Ditch
-Y18- STA. 21+15 LT

DETAIL S2
SPECIAL CUT DITCH
(Not to Scale)
Natural Ground; 2:1; D; d; 4:1 or Flatter; Front Ditch Slope
Min. D = 1 Ft. Max d = 1 Ft.
Type of Liner = PSRM
FROM -Y18- STA. 17+00 TO STA. 18+00 LT

DETAIL S3
SPECIAL CUT DITCH w/HINGE
(Not to Scale)
Natural Ground; Hinge; 4:1; D; d; 6.0'; 4:1 or Flatter; Front Ditch Slope
Min. D = 0.9 Ft. Max. d = 0.9 Ft.
Type of Liner = PSRM
FROM -Y18- STA. 18+00 TO STA. 21+00 LT
FROM -Y18- STA. 22+50 TO STA. 25+70 LT

7/31/2015
10:49:14 AM
\proj\R2603_Rdy_psh19.dgn

DocuSign Envelope ID: DA518730-DB21-4CE9-928C-9D938A62EA59

8/17/99

REVISIONS

PROJECT REFERENCE NO.	SHEET NO.
R-2603	20
R/W SHEET NO.	21

ROADWAY DESIGN ENGINEER — NORTH CAROLINA PROFESSIONAL SEAL 19724 ENGINEER — DARIUS BURKE EVANS — RC4AA32B6B6F4AA... — 8/10/2015

HYDRAULICS ENGINEER — NORTH CAROLINA PROFESSIONAL SEAL 21656 ENGINEER — KENDRA BRANNON MEADOW — D8C49F0557E4B4A... — 8/10/2015

M A Engineering Consultants, Inc.
NC License: F-0160
598 East Chatham Street Suite 137 Cary, NC 27511
Phone: 919.297.0220 Fax: 919.297.0221

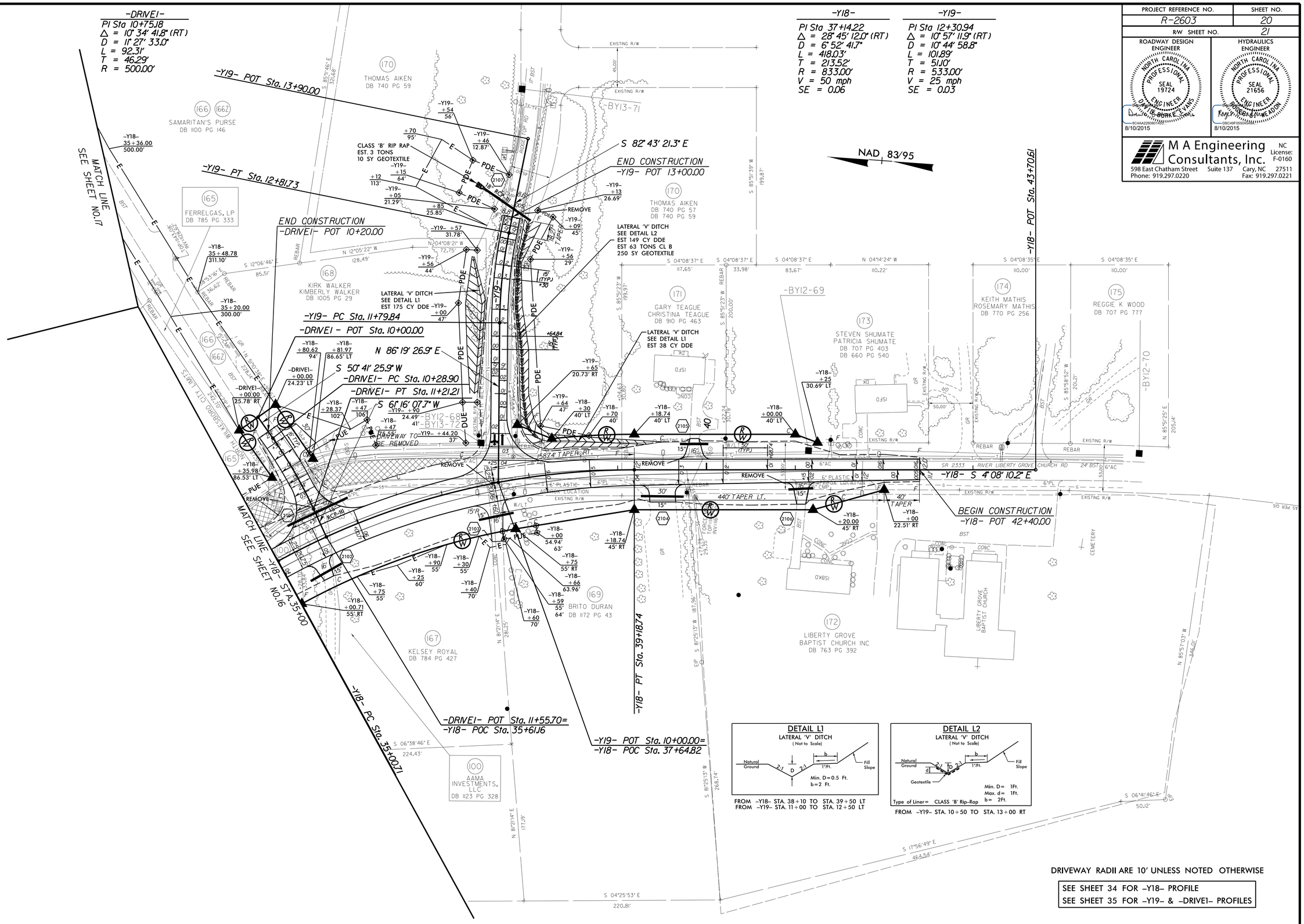

7/31/2015
12:40:45 PM
U:\Proj\R2603_Rdy_psh20.dgn

DocuSign Envelope ID: DA518730-DB21-4CE9-928C-9D938A62EA59

M A Engineering Consultants, Inc.
598 East Chatham Street Suite 137 Cary, NC 27511
Phone: 919.297.0220 Fax: 919.297.0221

PROJECT REFERENCE NO.	SHEET NO.
R-2603	21

ROADWAY DESIGN ENGINEER
NORTH CAROLINA PROFESSIONAL SEAL 19724 ENGINEER DAVID BURKE EVANS
8/10/2015

HYDRAULICS ENGINEER
NORTH CAROLINA PROFESSIONAL SEAL 21656 ENGINEER RANDY BRIAN WEADON
8/10/2015

EXISTING GROUND
PROPOSED GRADE
LEFT DITCH GRADE
RIGHT DITCH GRADE

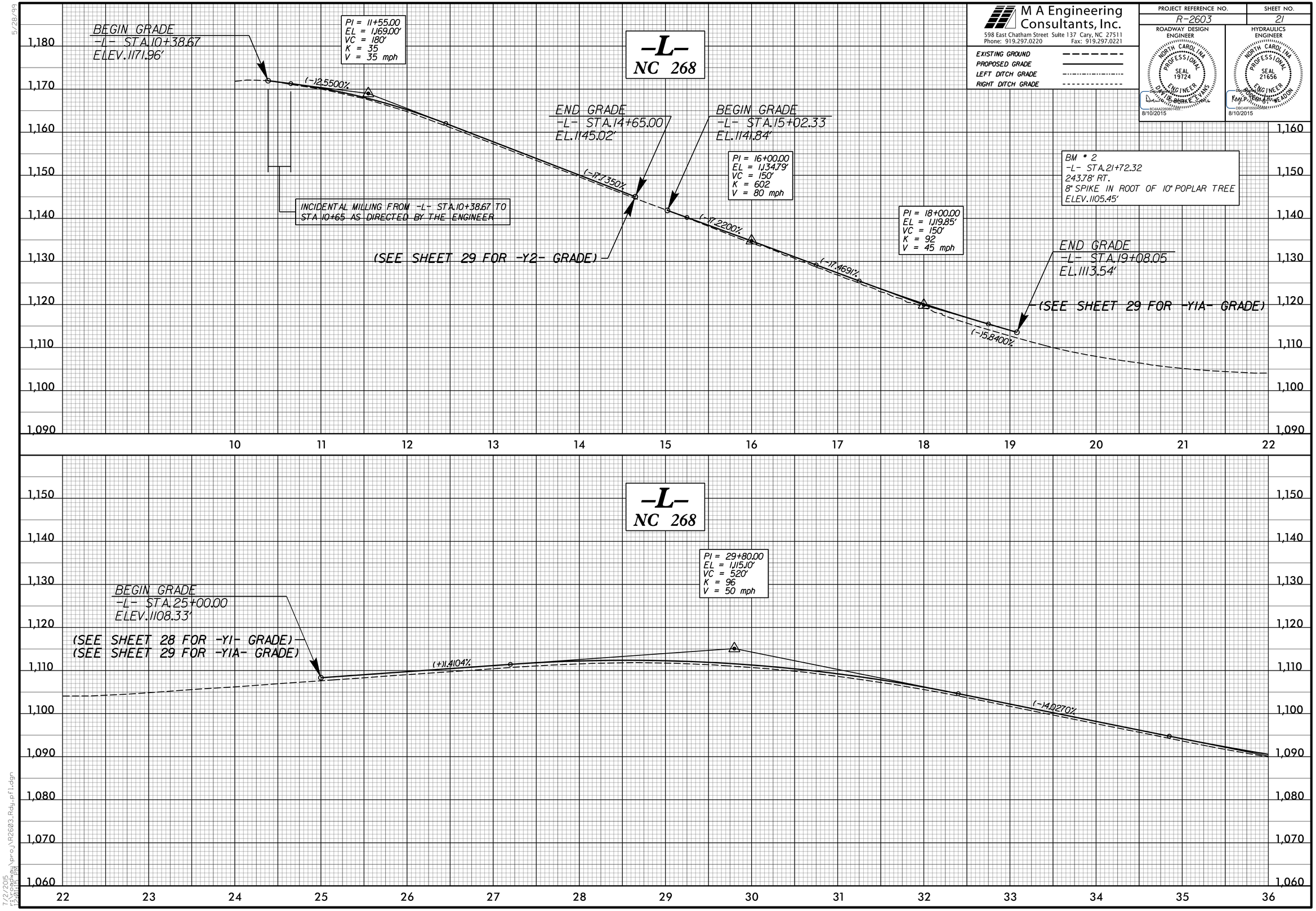

5/28/99

7/2/2015
12:00:00 PM
R:\Roadway\Proj\R2603_Rdy_pf1.dgn

DocuSign Envelope ID: DA518730-DB21-4CE9-928C-9D938A62EA59

5/28/99

M A Engineering Consultants, Inc.
598 East Chatham Street Suite 137 Cary, NC 27511
Phone: 919.297.0220 Fax: 919.297.0221

PROJECT REFERENCE NO.	SHEET NO.
R-2603	22

ROADWAY DESIGN ENGINEER — NORTH CAROLINA PROFESSIONAL SEAL 21656 ENGINEER — DOUGLAS E. MEADOW — 8/10/2015

HYDRAULICS ENGINEER — NORTH CAROLINA PROFESSIONAL SEAL 21656 ENGINEER — KONG Y. TRUONG — 8/10/2015

EXISTING GROUND
PROPOSED GRADE
LEFT DITCH GRADE
RIGHT DITCH GRADE

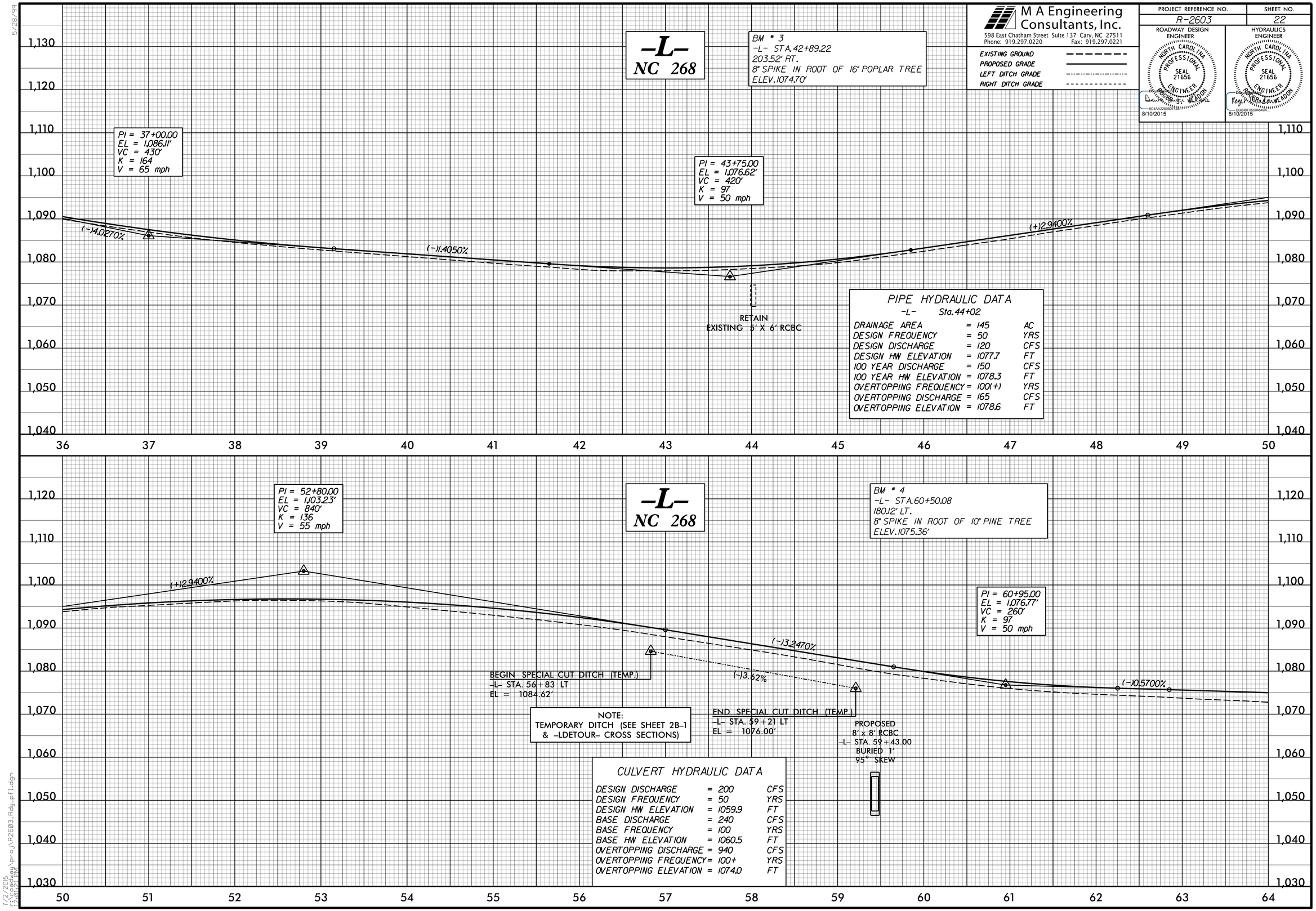

7/2/2015
12:06:26 PM
C:\pwworking\proj\R2603_Rdy_pfl.dgn

DocuSign Envelope ID: DA518730-DB21-4CE9-928C-9D938A62EA59

5/28/99

M A Engineering Consultants, Inc.
598 East Chatham Street Suite 137 Cary, NC 27511
Phone: 919.297.0220 Fax: 919.297.0221

PROJECT REFERENCE NO.	SHEET NO.
R-2603	23

ROADWAY DESIGN ENGINEER
NORTH CAROLINA PROFESSIONAL SEAL 19724 ENGINEER DAVID B. BURKE-EVANS
DocuSigned by: David B. Burke-Evans
8/10/2015

HYDRAULICS ENGINEER
NORTH CAROLINA PROFESSIONAL SEAL 21656 ENGINEER KONG V. THEAN-SOUNG ADIN
DocuSigned by: Kong V. Thean-Soung Adin
8/10/2015

EXISTING GROUND
PROPOSED GRADE
LEFT DITCH GRADE
RIGHT DITCH GRADE

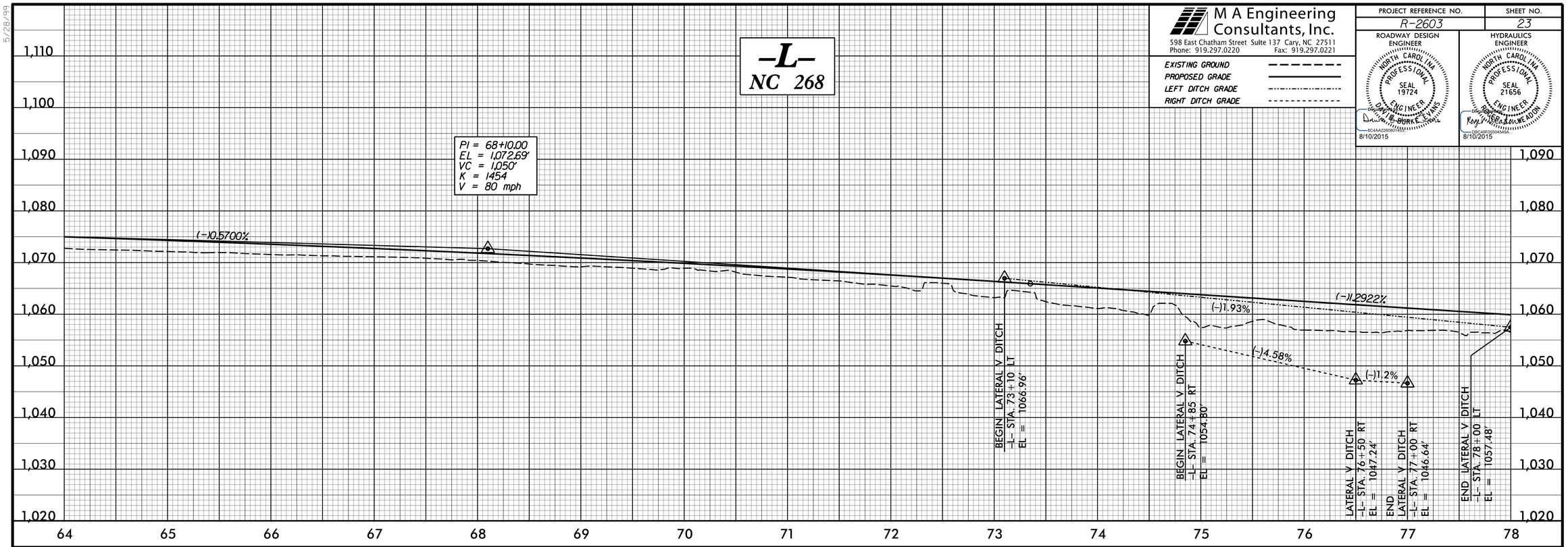

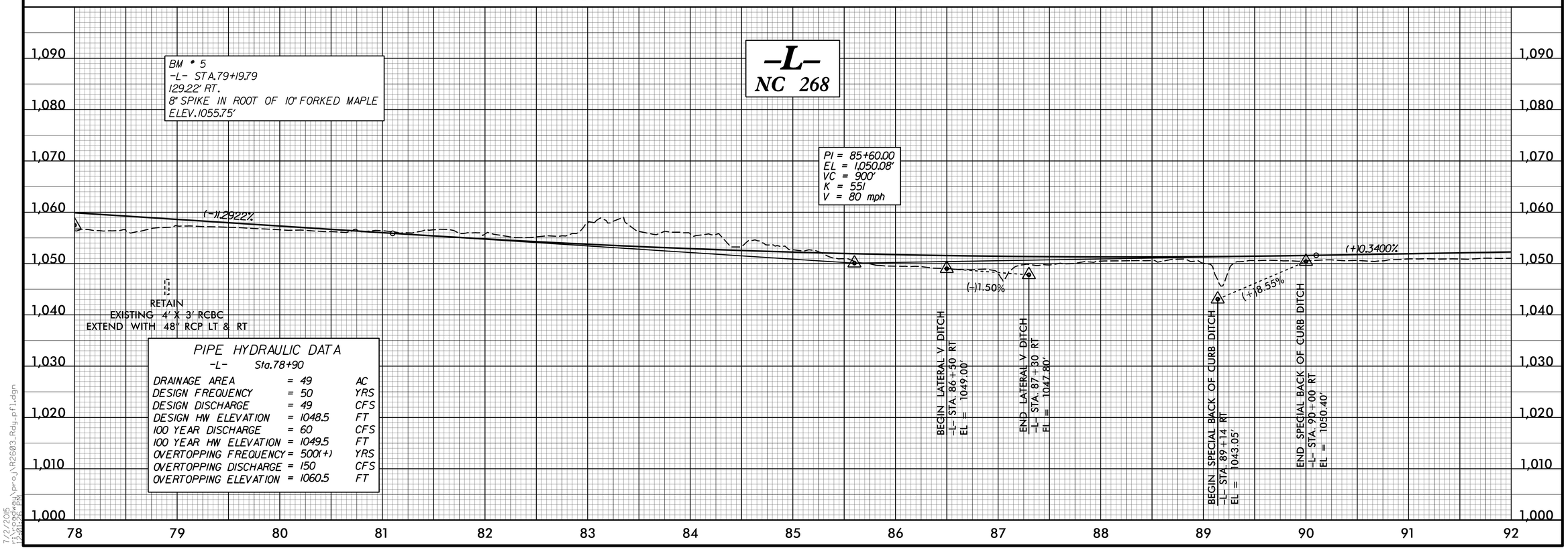

PIPE HYDRAULIC DATA
-L- Sta.78+90

DRAINAGE AREA	= 49	AC
DESIGN FREQUENCY	= 50	YRS
DESIGN DISCHARGE	= 49	CFS
DESIGN HW ELEVATION	= 1048.5	FT
100 YEAR DISCHARGE	= 60	CFS
100 YEAR HW ELEVATION	= 1049.5	FT
OVERTOPPING FREQUENCY	= 500(+)	YRS
OVERTOPPING DISCHARGE	= 150	CFS
OVERTOPPING ELEVATION	= 1060.5	FT

7/2/2015
12:06:22 PM
I:\Roadway\Proj\R2603_Rdy_pfl.dgn

DocuSign Envelope ID: DA518730-DB21-4CE9-928C-9D938A62EA59

M A Engineering Consultants, Inc.
598 East Chatham Street Suite 137 Cary, NC 27511
Phone: 919.297.0220 Fax: 919.297.0221

PROJECT REFERENCE NO.	SHEET NO.
R-2603	24

ROADWAY DESIGN ENGINEER — NORTH CAROLINA PROFESSIONAL SEAL 19724 — DAVID B. BURKE-EVANS — 8/10/2015

HYDRAULICS ENGINEER — NORTH CAROLINA PROFESSIONAL SEAL 21656 — ROGER A. WADDIN — 8/10/2015

EXISTING GROUND
PROPOSED GRADE
LEFT DITCH GRADE
RIGHT DITCH GRADE

-L- NC 268

PI = 102+30.00
EL = 1,055.76'
VC = 770'
K = 152
V = 60 mph

(+)0.3400%
(-)0.65%
(+)1.80%
(+)2.05%
(-)4.7284%

30" CSP
SKEW = 87°

BEGIN LATERAL 'V' DITCH
-L- STA. 95+60 LT
EL = 1047.90'

END LATERAL V DITCH
-L- STA. 96+73 LT
EL = 1047.17'

BEGIN LATERAL V DITCH
-L- STA. 96+78 LT
EL = 1046.00'

END LATERAL 'V' DITCH
-L- STA. 98+26 LT
EL = 1048.65'

BEGIN LATERAL 'V' DITCH
-L- STA. 99+31 LT
EL = 1050.45'

END LATERAL 'V' DITCH
-L- STA. 99+75 LT
EL = 1051.35'

PIPE HYDRAULIC DATA
-L- Sta. 96+81

DRAINAGE AREA	= 21	AC
DESIGN FREQUENCY	= 50	YRS
DESIGN DISCHARGE	= 35	CFS
DESIGN HW ELEVATION	= 1049	FT
100 YEAR DISCHARGE	= 42	CFS
100 YEAR HW ELEVATION	= 1049.9	FT
OVERTOPPING FREQUENCY	= 100(+)	YRS
OVERTOPPING DISCHARGE	= 46	CFS
OVERTOPPING ELEVATION	= 1050.5	FT

-L- NC 268

PI = 113+77.70
EL = 1,001.49'
VC = 510'
K = 118
V = 55 mph

(-)7.18%
(-)9.2%
(+)7.32%
(-)2.5%
(-)0.8%
(-)4.7284%
(-)13.67%
(-)4.3%
(-)0.3898%

30" RCP
SKEW = 58°

100 LF @ 8.32%

BEGIN LATERAL 'V' DITCH
-L- STA. 105+50 LT
EL = 1033.00'

BEGIN LATERAL BASE DITCH
-L- STA. 107+00 RT
EL = 1030.20'

LATERAL 'V' DITCH
-L- STA. 107+59 LT
EL = 1018.00'

END LATERAL 'V' DITCH
-L- STA. 108+00 LT
EL = 1021.00'

LATERAL BASE DITCH
-L- STA. 108+50 RT
EL = 1016.40'

LATERAL BASE DITCH
-L- STA. 109+00 RT
EL = 1015.15'

END LATERAL BASE DITCH
-L- STA. 109+50 RT
EL = 1014.75'

BEGIN BASE TAIL DITCH
-L- STA. 110+79 (114' RT)
EL = 1013.00'

BEGIN LATERAL BASE DITCH
-L- STA. 111+00 RT
EL = 1011.51'

END BASE TAIL DITCH
LATERAL BASE DITCH
-L- STA. 111+50 (65.65' RT)
EL = 1004.68'

END LATERAL BASE DITCH
-L- STA. 117+00 RT
EL = 981.03'

BEGIN BRIDGE (EASTBOUND)
-L- STA. 116+60.00

END BRIDGE (EASTBOUND)
-L- STA. 118+10.00 RT

PROPOSED 45" PRESTRESSED CONCRETE GIRDER BRIDGE
3 SPANS (1@40', 1@65', 1@45')
TOTAL LENGTH = 150'
-L- SKEW = 90°

BRIDGE HYDRAULIC DATA

DESIGN DISCHARGE	= 6500	CFS
DESIGN FREQUENCY	= 50	YRS
DESIGN HW ELEVATION	= 991.0	FT
BASE DISCHARGE	= 7500	CFS
BASE FREQUENCY	= 100	YRS
BASE HW ELEVATION	= 991.76	FT
OVERTOPPING DISCHARGE	= 13000	CFS
OVERTOPPING FREQUENCY	= 500(+)	YRS
OVERTOPPING ELEVATION	= 998.3	FT

BM # 6
-L- STA.118+08.33
209.61' LT.
8" SPIKE IN ROOT OF 10" WALNUT TREE ON BANK OF MULBERRY CREEK
ELEV. 994.53'

PIPE HYDRAULIC DATA
-L- Sta. 108+06 LT

DRAINAGE AREA	= 18	AC
DESIGN FREQUENCY	= 50	YRS
DESIGN DISCHARGE	= 30	CFS
DESIGN HW ELEVATION	= 1022.3	FT
100 YEAR DISCHARGE	= 36	CFS
100 YEAR HW ELEVATION	= 1022.8	FT
OVERTOPPING FREQUENCY	= 500(+)	YRS
OVERTOPPING DISCHARGE	= 50	CFS
OVERTOPPING ELEVATION	= 1025.1	FT

5/28/99
7/2/2015
12:09:22 PM
R:\Roadway\Proj\R2603_Rdy_pfl.dgn

DocuSign Envelope ID: DA518730-DB21-4CE9-928C-9D938A62EA59

M A Engineering Consultants, Inc.
598 East Chatham Street Suite 137 Cary, NC 27511
Phone: 919.297.0220 Fax: 919.297.0221

PROJECT REFERENCE NO.	SHEET NO.
R-2603	25

ROADWAY DESIGN ENGINEER — NORTH CAROLINA PROFESSIONAL SEAL 19724 ENGINEER — DAVID B. BURKE-EVANS — 8/10/2015

HYDRAULICS ENGINEER — NORTH CAROLINA PROFESSIONAL SEAL 21656 ENGINEER — ROGER A. WEADON — 8/10/2015

EXISTING GROUND
PROPOSED GRADE
LEFT DITCH GRADE
RIGHT DITCH GRADE

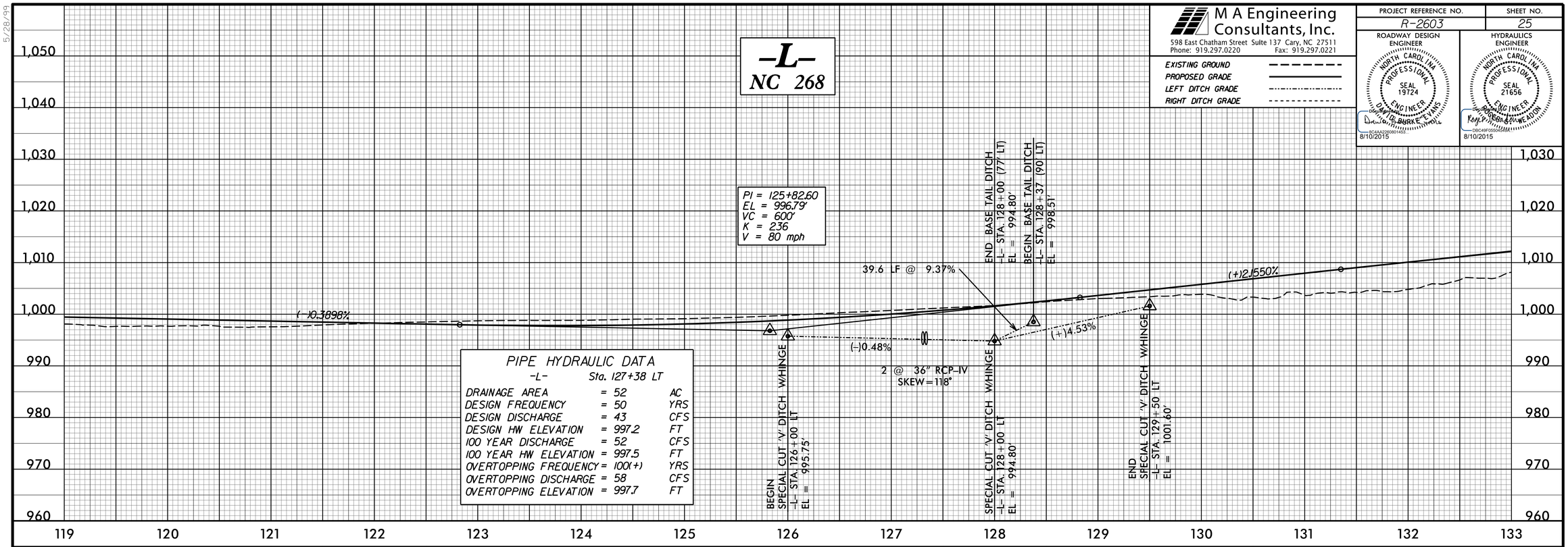

5/28/99

7/2/2015
12:09:09 PM
C:\Roadway\Proj\R2603_Rdy_pfl.dgn

DocuSign Envelope ID: DA518730-DB21-4CE9-928C-9D938A62EA59

M A Engineering Consultants, Inc.
598 East Chatham Street Suite 137 Cary, NC 27511
Phone: 919.297.0220 Fax: 919.297.0221

PROJECT REFERENCE NO.	SHEET NO.
R-2603	26

ROADWAY DESIGN ENGINEER — NORTH CAROLINA PROFESSIONAL SEAL 19724 — ENGINEER — DAVID B. BURKE-EVANS — 8/10/2015

HYDRAULICS ENGINEER — NORTH CAROLINA PROFESSIONAL SEAL 21656 — ENGINEER — ROGER D. WEADON — 8/10/2015

EXISTING GROUND
PROPOSED GRADE
LEFT DITCH GRADE
RIGHT DITCH GRADE

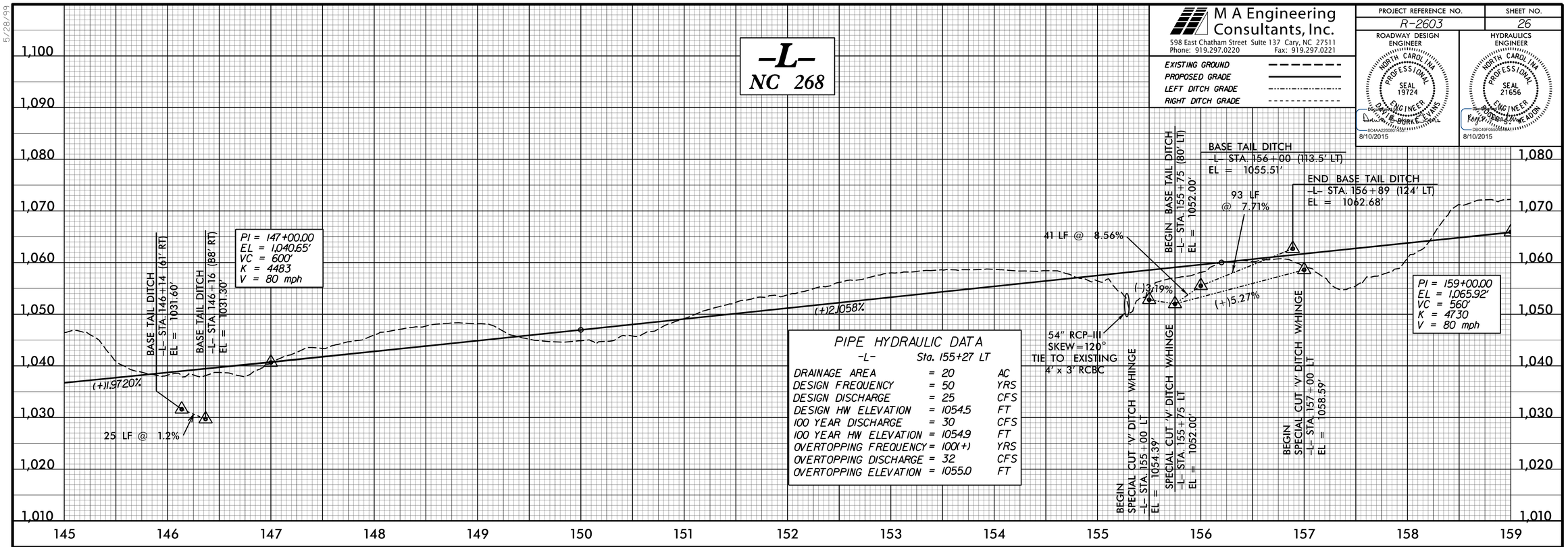

PIPE HYDRAULIC DATA
-L- Sta. 155+27 LT

DRAINAGE AREA	= 20	AC
DESIGN FREQUENCY	= 50	YRS
DESIGN DISCHARGE	= 25	CFS
DESIGN HW ELEVATION	= 1054.5	FT
100 YEAR DISCHARGE	= 30	CFS
100 YEAR HW ELEVATION	= 1054.9	FT
OVERTOPPING FREQUENCY	= 100(+)	YRS
OVERTOPPING DISCHARGE	= 32	CFS
OVERTOPPING ELEVATION	= 1055.0	FT

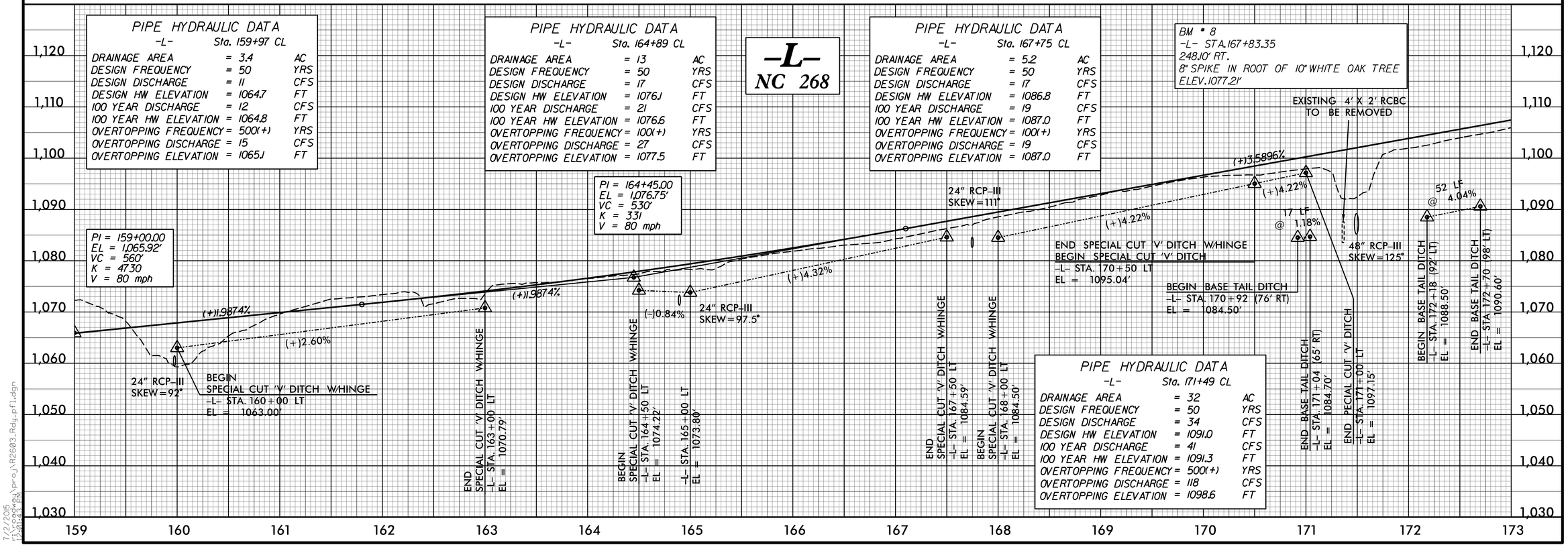

BM # 8
-L- STA. 167+83.35
248.10' RT.
8" SPIKE IN ROOT OF 10" WHITE OAK TREE
ELEV. 1077.21'

PIPE HYDRAULIC DATA
-L- Sta. 159+97 CL

DRAINAGE AREA	= 3.4	AC
DESIGN FREQUENCY	= 50	YRS
DESIGN DISCHARGE	= 11	CFS
DESIGN HW ELEVATION	= 1064.7	FT
100 YEAR DISCHARGE	= 12	CFS
100 YEAR HW ELEVATION	= 1064.8	FT
OVERTOPPING FREQUENCY	= 500(+)	YRS
OVERTOPPING DISCHARGE	= 15	CFS
OVERTOPPING ELEVATION	= 1065.1	FT

PIPE HYDRAULIC DATA
-L- Sta. 164+89 CL

DRAINAGE AREA	= 13	AC
DESIGN FREQUENCY	= 50	YRS
DESIGN DISCHARGE	= 17	CFS
DESIGN HW ELEVATION	= 1076.1	FT
100 YEAR DISCHARGE	= 21	CFS
100 YEAR HW ELEVATION	= 1076.6	FT
OVERTOPPING FREQUENCY	= 100(+)	YRS
OVERTOPPING DISCHARGE	= 27	CFS
OVERTOPPING ELEVATION	= 1077.5	FT

PIPE HYDRAULIC DATA
-L- Sta. 167+75 CL

DRAINAGE AREA	= 5.2	AC
DESIGN FREQUENCY	= 50	YRS
DESIGN DISCHARGE	= 17	CFS
DESIGN HW ELEVATION	= 1086.8	FT
100 YEAR DISCHARGE	= 19	CFS
100 YEAR HW ELEVATION	= 1087.0	FT
OVERTOPPING FREQUENCY	= 100(+)	YRS
OVERTOPPING DISCHARGE	= 19	CFS
OVERTOPPING ELEVATION	= 1087.0	FT

PIPE HYDRAULIC DATA
-L- Sta. 171+49 CL

DRAINAGE AREA	= 32	AC
DESIGN FREQUENCY	= 50	YRS
DESIGN DISCHARGE	= 34	CFS
DESIGN HW ELEVATION	= 1091.0	FT
100 YEAR DISCHARGE	= 41	CFS
100 YEAR HW ELEVATION	= 1091.3	FT
OVERTOPPING FREQUENCY	= 500(+)	YRS
OVERTOPPING DISCHARGE	= 118	CFS
OVERTOPPING ELEVATION	= 1098.6	FT

5/28/99
7/2/2015
12:06:24 PM
C:\Roadway\Proj\R2603_Rdy_pf1.dgn

DocuSign Envelope ID: DA518730-DB21-4CE9-928C-9D938A62EA59

M A Engineering Consultants, Inc.
598 East Chatham Street Suite 137 Cary, NC 27511
Phone: 919.297.0220 Fax: 919.297.0221

PROJECT REFERENCE NO.	SHEET NO.
R-2603	27

ROADWAY DESIGN ENGINEER
NORTH CAROLINA PROFESSIONAL SEAL 19724 ENGINEER
DAVID B. BURKE-EVANS
8/10/2015

HYDRAULICS ENGINEER
NORTH CAROLINA PROFESSIONAL SEAL 21656 ENGINEER
ROGER BRADLEY MEADOW
8/10/2015

EXISTING GROUND
PROPOSED GRADE
LEFT DITCH GRADE
RIGHT DITCH GRADE

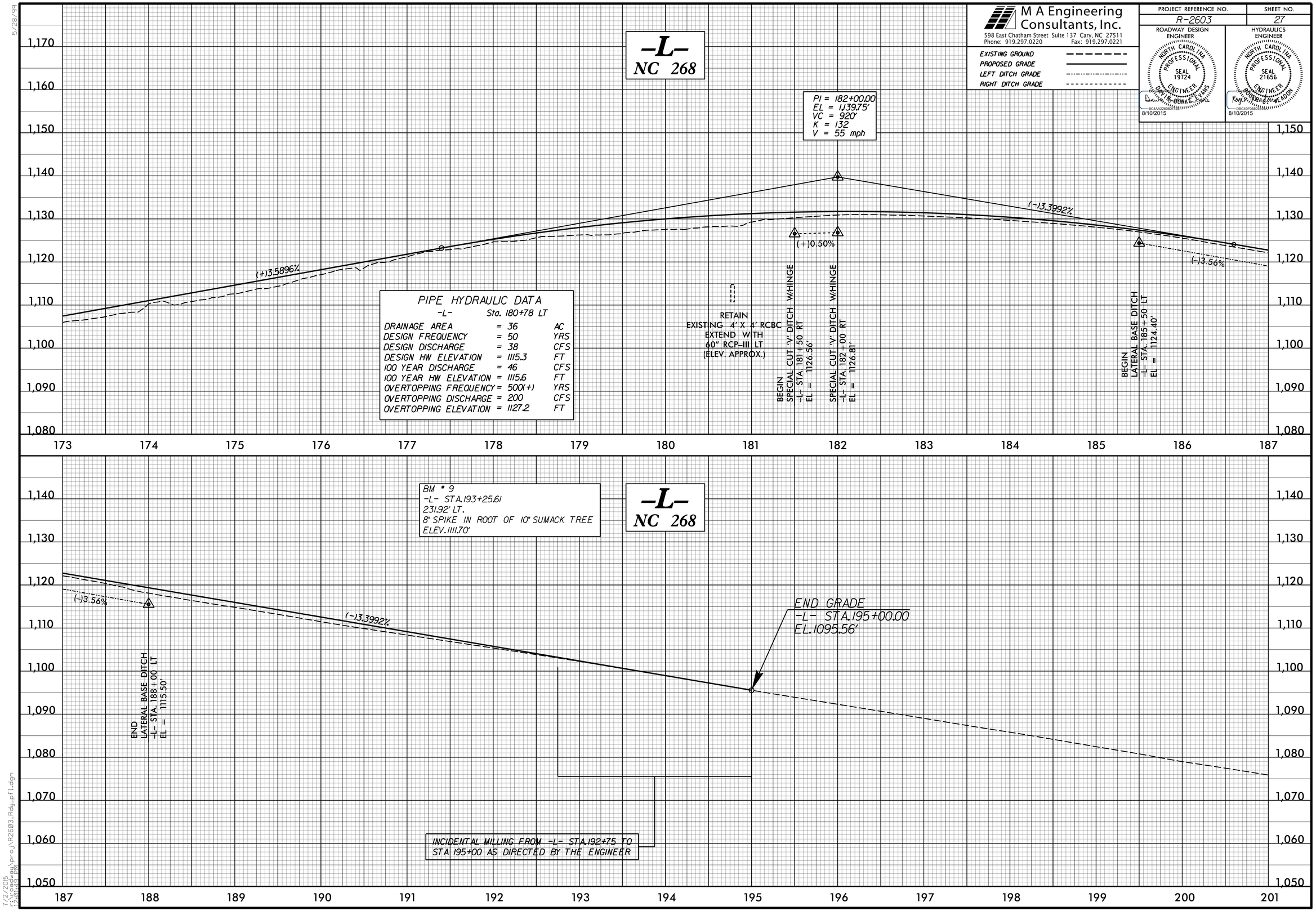

PIPE HYDRAULIC DATA

-L-	Sta. 180+78 LT	
DRAINAGE AREA	= 36	AC
DESIGN FREQUENCY	= 50	YRS
DESIGN DISCHARGE	= 38	CFS
DESIGN HW ELEVATION	= 1115.3	FT
100 YEAR DISCHARGE	= 46	CFS
100 YEAR HW ELEVATION	= 1115.6	FT
OVERTOPPING FREQUENCY	= 500(+)	YRS
OVERTOPPING DISCHARGE	= 200	CFS
OVERTOPPING ELEVATION	= 1127.2	FT

5/28/99

7/2/2015
12:00:00 PM
C:\Roadway\Proj\R2603_Rdy_pfl.dgn

DocuSign Envelope ID: DA518730-DB21-4CE9-928C-9D938A62EA59

M A Engineering Consultants, Inc.
598 East Chatham Street Suite 137 Cary, NC 27511
Phone: 919.297.0220 Fax: 919.297.0221

PROJECT REFERENCE NO.	SHEET NO.
R-2603	28

ROADWAY DESIGN ENGINEER — NORTH CAROLINA PROFESSIONAL SEAL 19724 ENGINEER — DAVID B. BURKE EVANS — DocuSigned by: 4D4AA0226D6D1BE... 8/10/2015

HYDRAULICS ENGINEER — NORTH CAROLINA PROFESSIONAL SEAL 21656 ENGINEER — KONG V. TRAN — DocuSigned by: D0C46F0350454A1... 8/10/2015

EXISTING GROUND
PROPOSED GRADE
LEFT DITCH GRADE
RIGHT DITCH GRADE

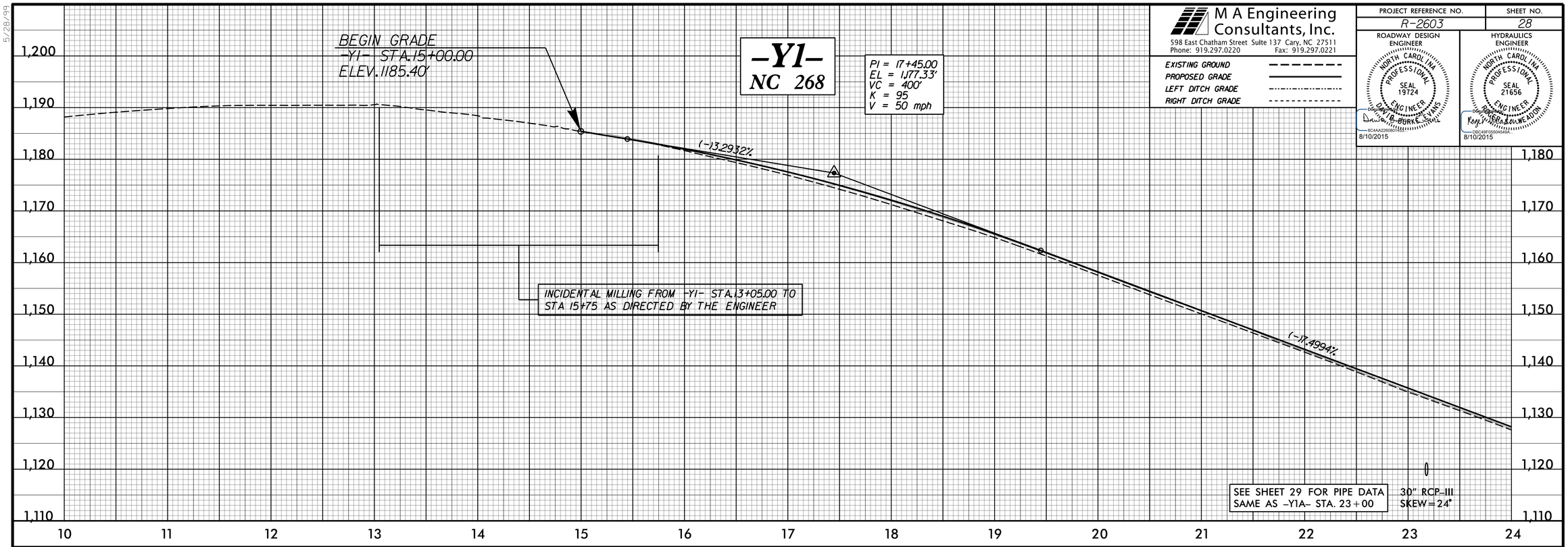

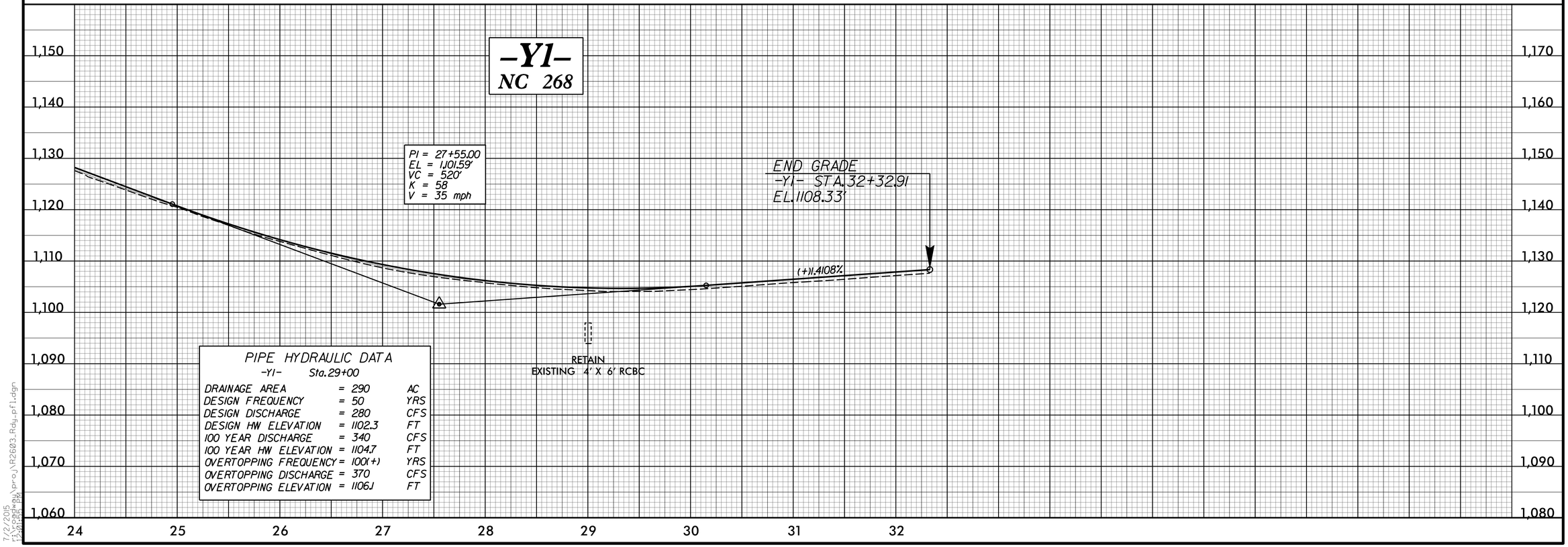

PIPE HYDRAULIC DATA
-Y1- Sta.29+00

DRAINAGE AREA	= 290	AC
DESIGN FREQUENCY	= 50	YRS
DESIGN DISCHARGE	= 280	CFS
DESIGN HW ELEVATION	= 1102.3	FT
100 YEAR DISCHARGE	= 340	CFS
100 YEAR HW ELEVATION	= 1104.7	FT
OVERTOPPING FREQUENCY	= 100(+)	YRS
OVERTOPPING DISCHARGE	= 370	CFS
OVERTOPPING ELEVATION	= 1106.1	FT

5/28/99

7/2/2015
12:00:00 PM
\\pw-pw\pw$\pw$\proj\R2603_Rdy_pf1.dgn

DocuSign Envelope ID: DA518730-DB21-4CE9-928C-9D938A62EA59

5/28/99

M A Engineering Consultants, Inc.
598 East Chatham Street Suite 137 Cary, NC 27511
Phone: 919.297.0220 Fax: 919.297.0221

PROJECT REFERENCE NO.	SHEET NO.
R-2603	29

ROADWAY DESIGN ENGINEER — NORTH CAROLINA PROFESSIONAL SEAL 19724 ENGINEER — DAVID B. BURKE-EVANS — 8/10/2015

HYDRAULICS ENGINEER — NORTH CAROLINA PROFESSIONAL SEAL 21656 ENGINEER — KONJIT A. BONCADIN — 8/10/2015

EXISTING GROUND
PROPOSED GRADE
LEFT DITCH GRADE
RIGHT DITCH GRADE

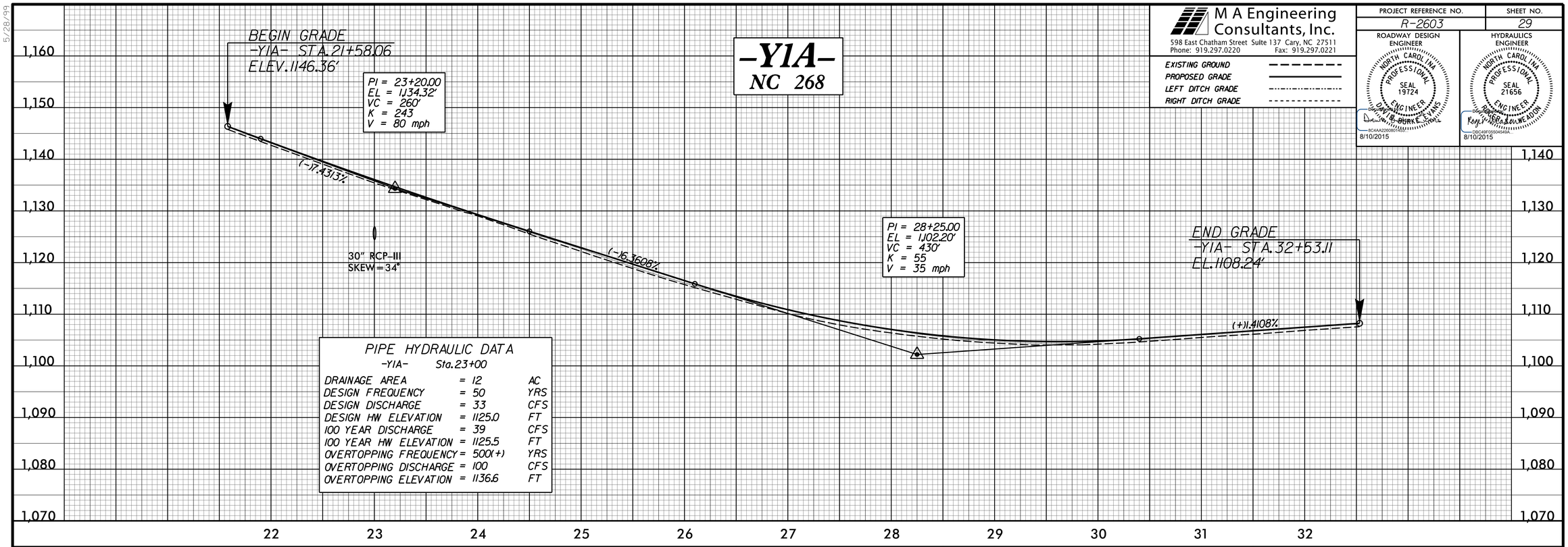

7/2/2015
1:39:02 PM
H:\proj\R2603_Rdy_pfl.dgn

DocuSign Envelope ID: DA518730-DB21-4CE9-928C-9D938A62EA59

M A Engineering Consultants, Inc.
598 East Chatham Street Suite 137 Cary, NC 27511
Phone: 919.297.0220 Fax: 919.297.0221

PROJECT REFERENCE NO.	SHEET NO.
R-2603	30

ROADWAY DESIGN ENGINEER — NORTH CAROLINA PROFESSIONAL SEAL 19724 ENGINEER — DAVID BURKE EVANS — 8/10/2015

HYDRAULICS ENGINEER — NORTH CAROLINA PROFESSIONAL SEAL 21656 ENGINEER — RANDY GREGORY WEADON — 8/10/2015

EXISTING GROUND
PROPOSED GRADE
LEFT DITCH GRADE
RIGHT DITCH GRADE

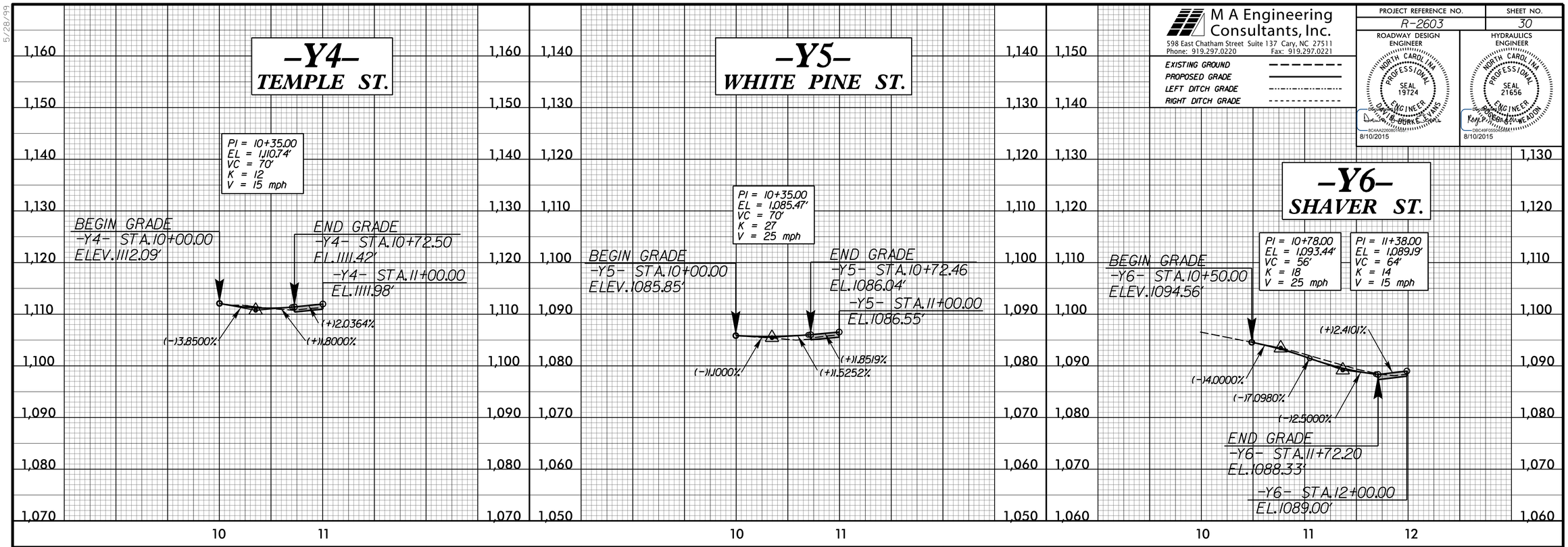

5/28/99
7/2/2015
12:09:09 PM
\Roadway\Proj\R2603_Rdy_pf1.dgn

DocuSign Envelope ID: DA518730-DB21-4CE9-928C-9D938A62EA59

5/28/99

M A Engineering Consultants, Inc.
598 East Chatham Street Suite 137 Cary, NC 27511
Phone: 919.297.0220 Fax: 919.297.0221

PROJECT REFERENCE NO.	SHEET NO.
R-2603	31

ROADWAY DESIGN ENGINEER
NORTH CAROLINA PROFESSIONAL SEAL 19724 ENGINEER
DAVID B. BURKE-EVANS
DocuSigned by: 8CAAA3280801453...
8/10/2015

HYDRAULICS ENGINEER
NORTH CAROLINA PROFESSIONAL SEAL 21656 ENGINEER
KONG R. VANG
DocuSigned by: 0024097D5D04548...
8/10/2015

EXISTING GROUND
PROPOSED GRADE
LEFT DITCH GRADE
RIGHT DITCH GRADE

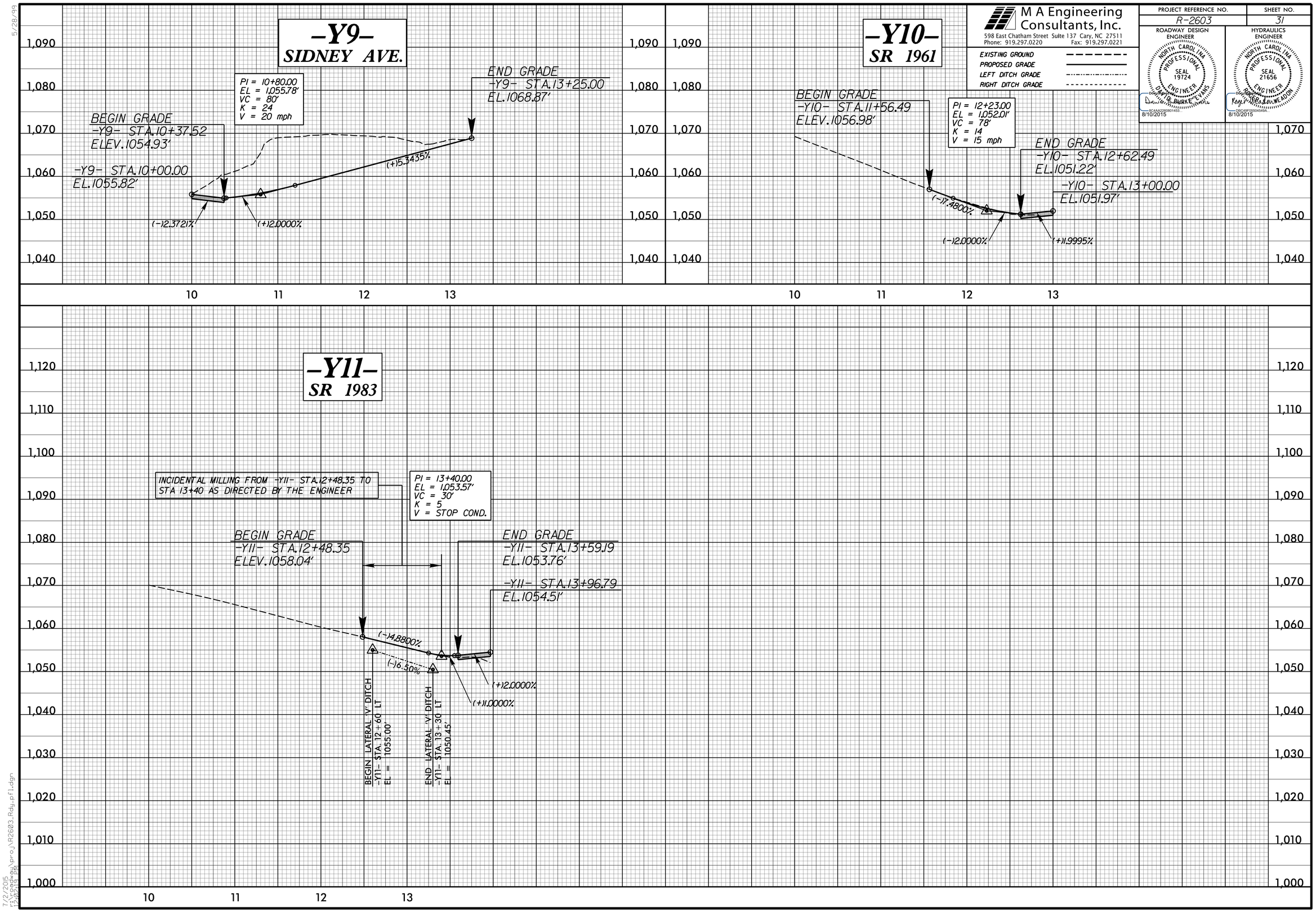

7/2/2015
13:02:24
pw:\\pw-proj\R2603.Rdy_pf1.dgn

DocuSign Envelope ID: DA518730-DB21-4CE9-928C-9D938A62EA59

5/28/99

M A Engineering Consultants, Inc.
598 East Chatham Street Suite 137 Cary, NC 27511
Phone: 919.297.0220 Fax: 919.297.0221

PROJECT REFERENCE NO.	SHEET NO.
R-2603	32

ROADWAY DESIGN ENGINEER — NORTH CAROLINA PROFESSIONAL SEAL 19724 ENGINEER — DAVID BURKE EVANS — 8/10/2015

HYDRAULICS ENGINEER — NORTH CAROLINA PROFESSIONAL SEAL 21656 ENGINEER — KARL THOMAS SOUWCADIN — 8/10/2015

EXISTING GROUND
PROPOSED GRADE
LEFT DITCH GRADE
RIGHT DITCH GRADE

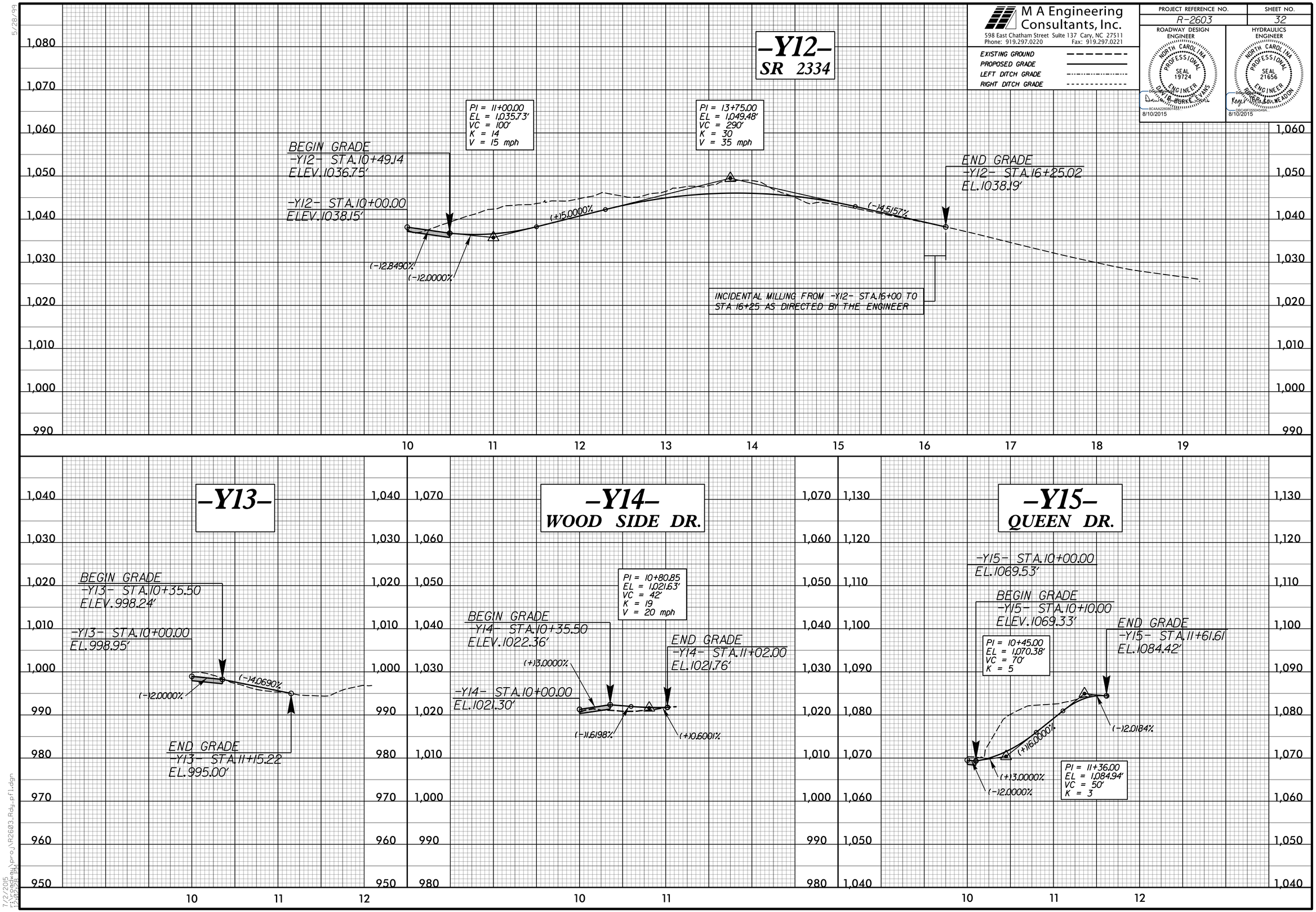

7/2/2015
12:09:24 PM
R:\Hydraulics\Proj\R2603_Rdy_pf1.dgn

DocuSign Envelope ID: DA518730-DB21-4CE9-928C-9D938A62EA59

5/14/99

M A Engineering Consultants, Inc.
598 East Chatham Street Suite 137 Cary, NC 27511
Phone: 919.297.0220 Fax: 919.297.0221

PROJECT REFERENCE NO.	SHEET NO.
R-2603	33

ROADWAY DESIGN ENGINEER — NORTH CAROLINA PROFESSIONAL SEAL 19724 ENGINEER — DAVID B. BURKE-EVANS — 8/10/2015

HYDRAULICS ENGINEER — NORTH CAROLINA PROFESSIONAL SEAL 21656 ENGINEER — RONALD B. WEADON — 8/10/2015

EXISTING GROUND
PROPOSED GRADE
LEFT DITCH GRADE
RIGHT DITCH GRADE

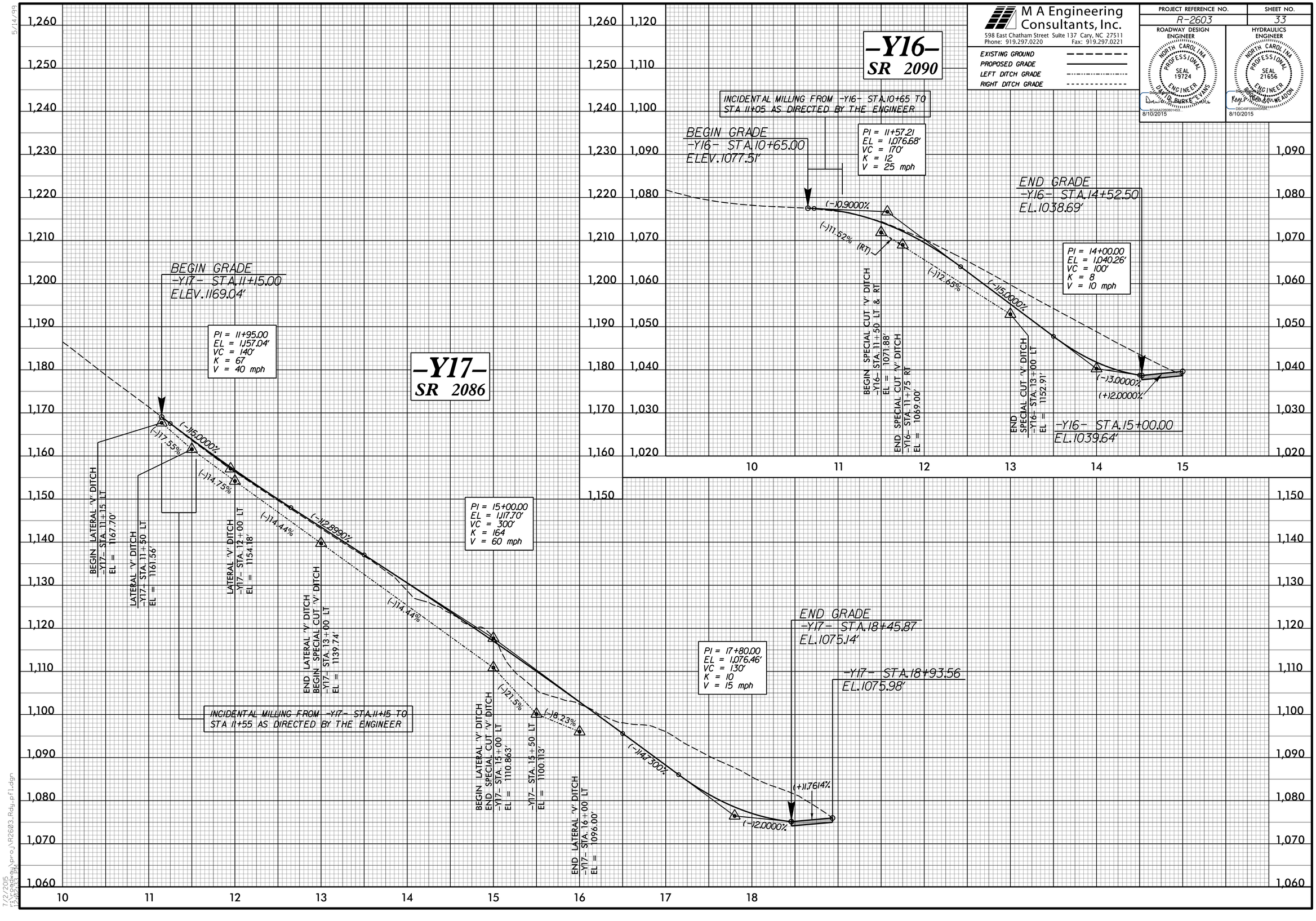

7/2/2015
I:\2603\Hydro\proJ\R2603_Rdy_pfl.dgn

DocuSign Envelope ID: DA518730-DB21-4CE9-928C-9D938A62EA59

M A Engineering Consultants, Inc.
598 East Chatham Street Suite 137 Cary, NC 27511
Phone: 919.297.0220 Fax: 919.297.0221

PROJECT REFERENCE NO.	SHEET NO.
R-2603	34

ROADWAY DESIGN ENGINEER — NORTH CAROLINA PROFESSIONAL SEAL 19724 — DAVID B. BURKE EVANS — 8/10/2015

HYDRAULICS ENGINEER — NORTH CAROLINA PROFESSIONAL SEAL 21656 — RANDY SEAGRAVES WEADON — 8/10/2015

EXISTING GROUND
PROPOSED GRADE
LEFT DITCH GRADE
RIGHT DITCH GRADE

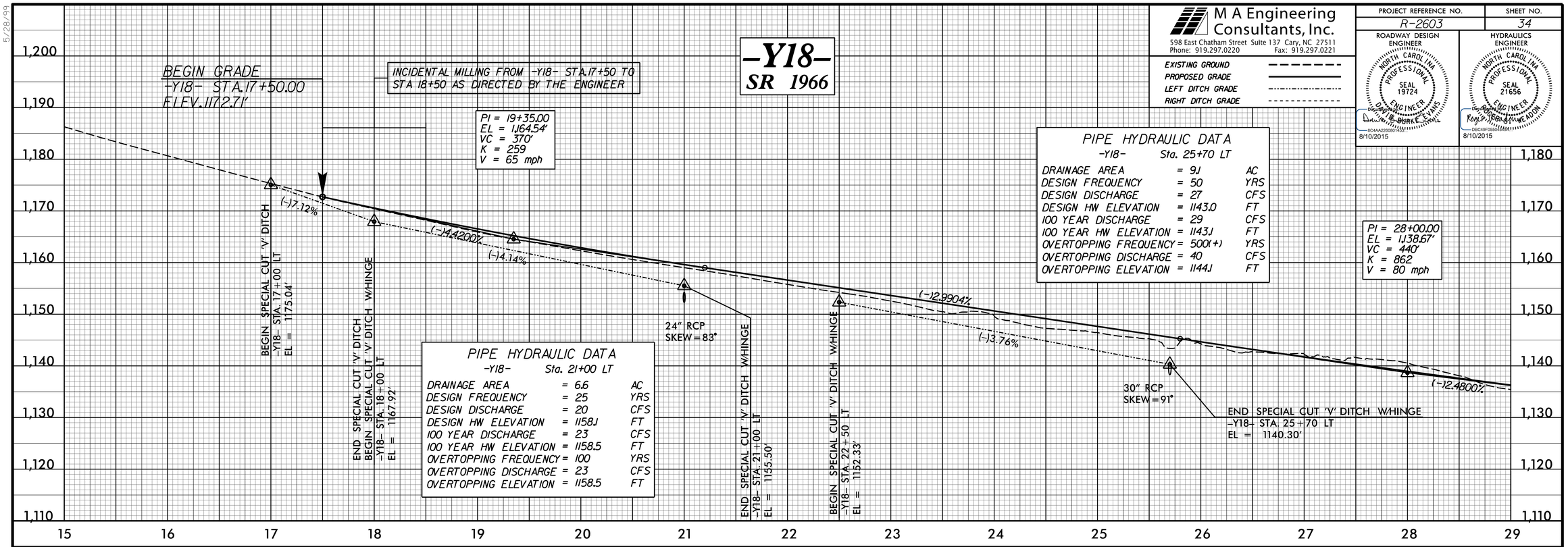

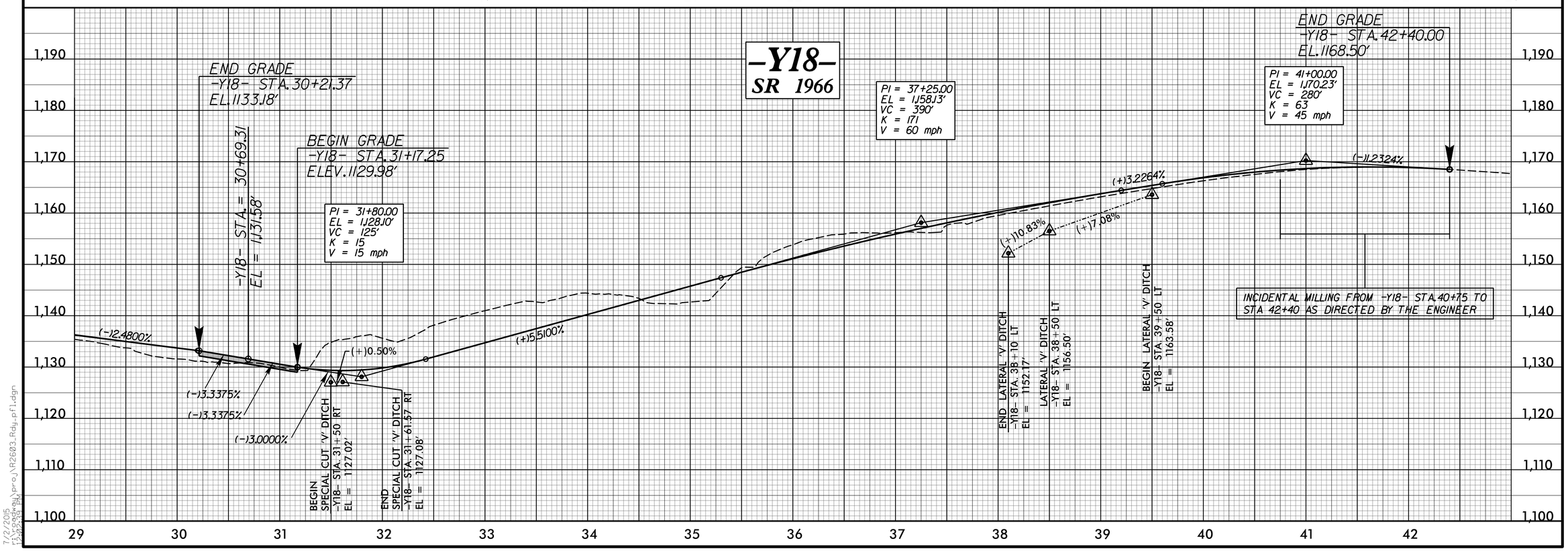

5/28/99

7/2/2015
12:09:24 PM
J:\9908\Proj\R2603_Rdy_pfl.dgn

DocuSign Envelope ID: DA518730-DB21-4CE9-928C-9D938A62EA59

M A Engineering Consultants, Inc.
598 East Chatham Street Suite 137 Cary, NC 27511
Phone: 919.297.0220 Fax: 919.297.0221

PROJECT REFERENCE NO.	SHEET NO.
R-2603	35

ROADWAY DESIGN ENGINEER — NORTH CAROLINA PROFESSIONAL SEAL 19724 — DAVID BURKE EVANS — 8/10/2015

HYDRAULICS ENGINEER — NORTH CAROLINA PROFESSIONAL SEAL 21656 — RANDY BRADLEY MEADIN — 8/10/2015

EXISTING GROUND
PROPOSED GRADE
LEFT DITCH GRADE
RIGHT DITCH GRADE

-Y19- RIDGE TOP RD.

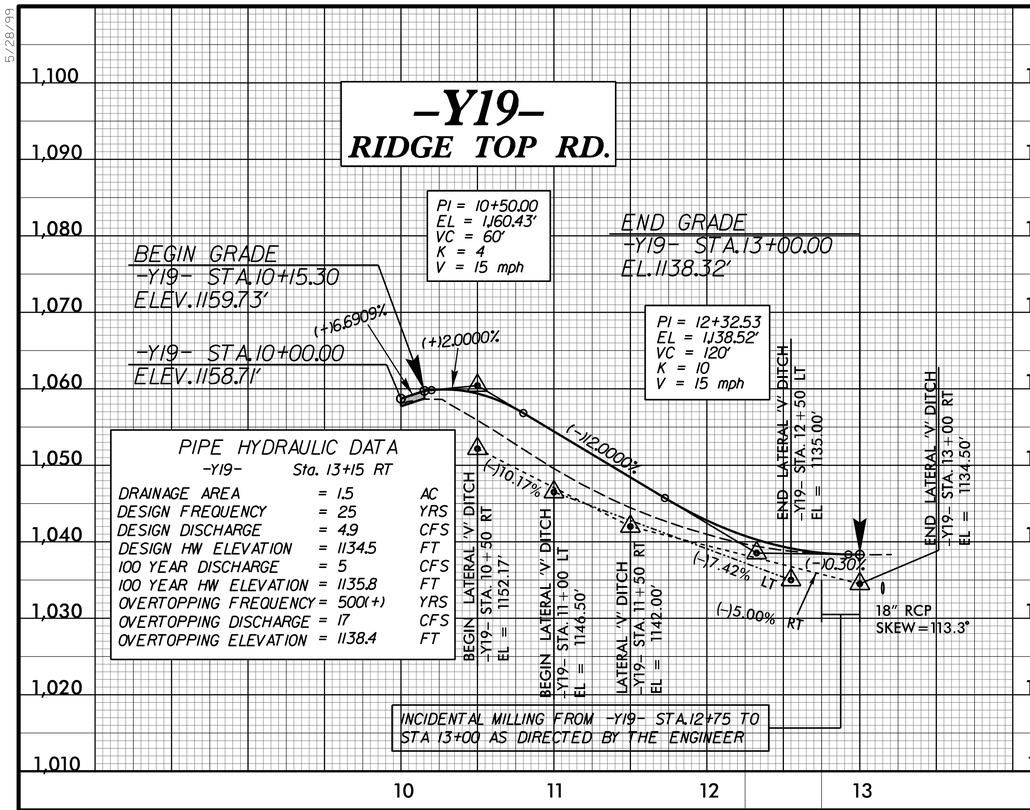

PIPE HYDRAULIC DATA
-Y19- Sta. 13+15 RT

DRAINAGE AREA	= 1.5	AC
DESIGN FREQUENCY	= 25	YRS
DESIGN DISCHARGE	= 4.9	CFS
DESIGN HW ELEVATION	= 1134.5	FT
100 YEAR DISCHARGE	= 5	CFS
100 YEAR HW ELEVATION	= 1135.8	FT
OVERTOPPING FREQUENCY	= 500(+)	YRS
OVERTOPPING DISCHARGE	= 17	CFS
OVERTOPPING ELEVATION	= 1138.4	FT

-DRIVE1-

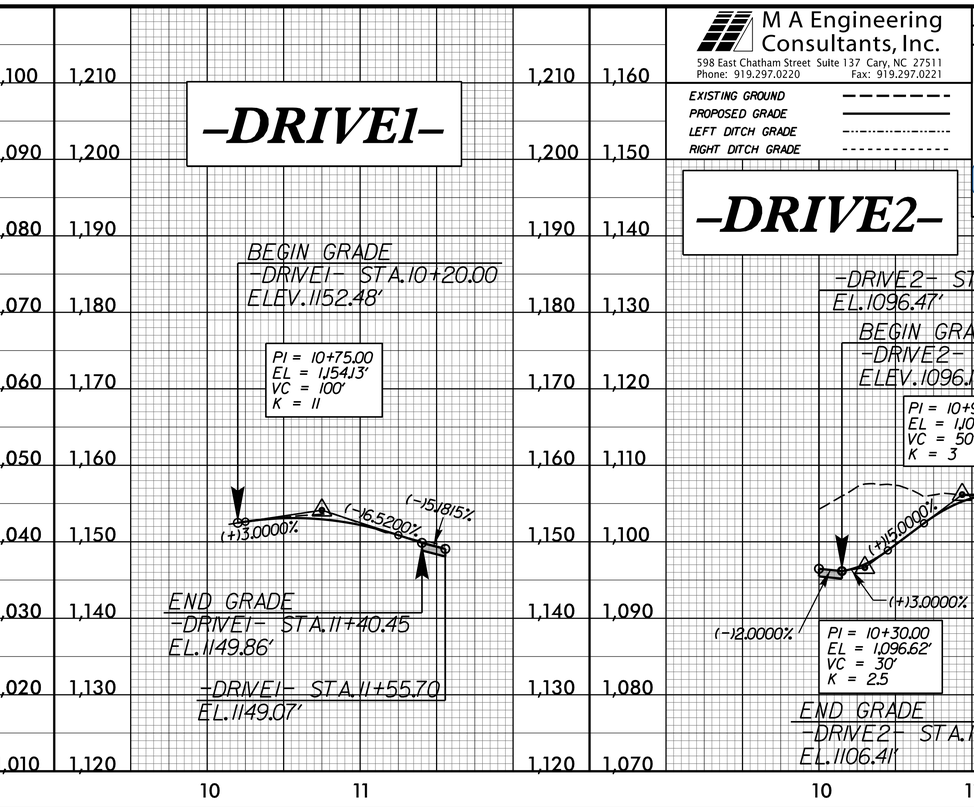

-DRIVE2-

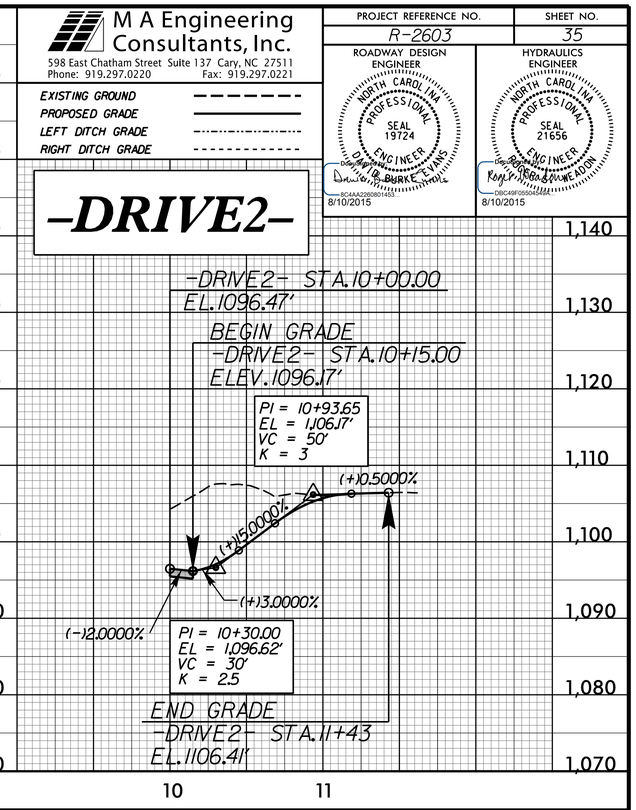

-DRIVE3-

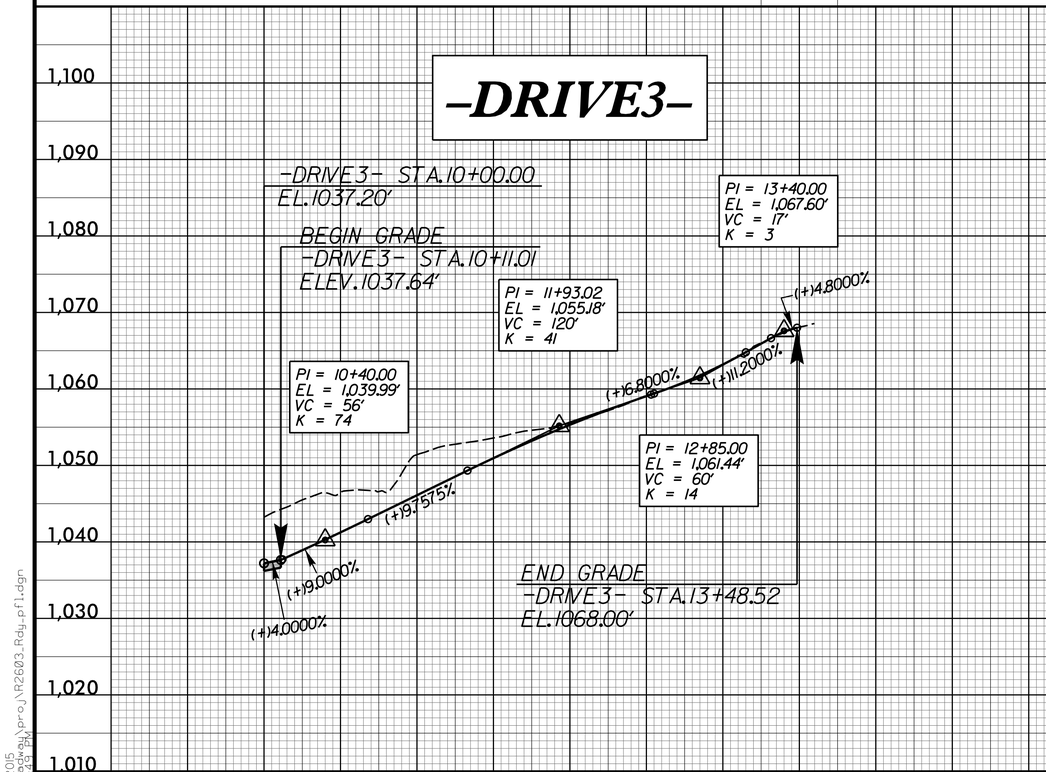

-DRIVE4-

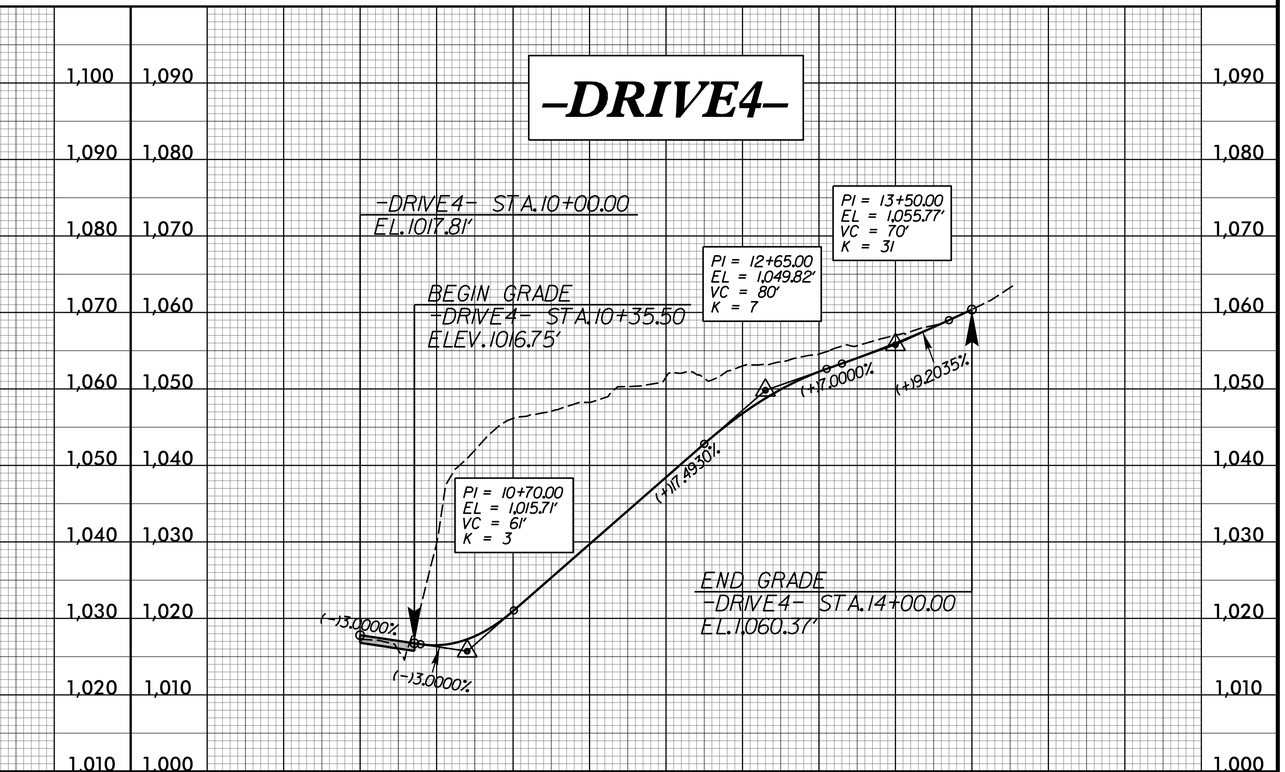

5/28/99
7/2/2015
12:39:34 PM
H:\proj\R2603_Rdy_pfl.dgn

DocuSign Envelope ID: DA518730-DB21-4CE9-928C-9D938A62EA59

5/28/99

M A Engineering Consultants, Inc.
598 East Chatham Street Suite 137 Cary, NC 27511
Phone: 919.297.0220 Fax: 919.297.0221

PROJECT REFERENCE NO.	SHEET NO.
R-2603	36

ROADWAY DESIGN ENGINEER — NORTH CAROLINA PROFESSIONAL SEAL 19724 ENGINEER — DAVID B. BURKE-EVANS — 8/10/2015

HYDRAULICS ENGINEER — NORTH CAROLINA PROFESSIONAL SEAL 21656 ENGINEER — RANDY R. HEADEN — 8/10/2015

EXISTING GROUND
PROPOSED GRADE
LEFT DITCH GRADE
RIGHT DITCH GRADE

-DRIVE5-

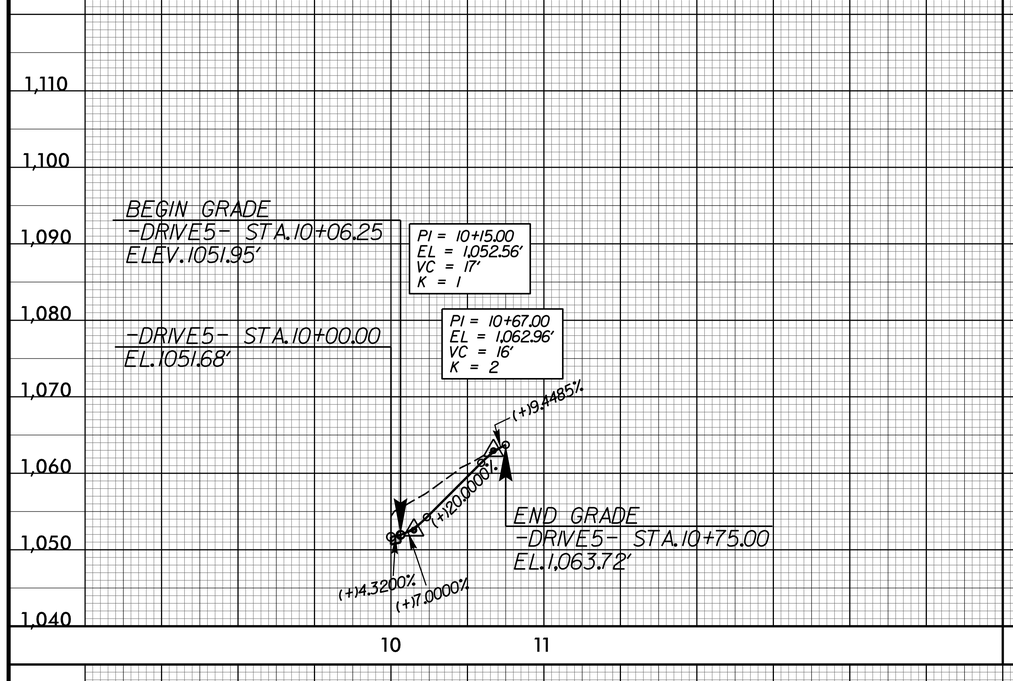

-DRIVE7-

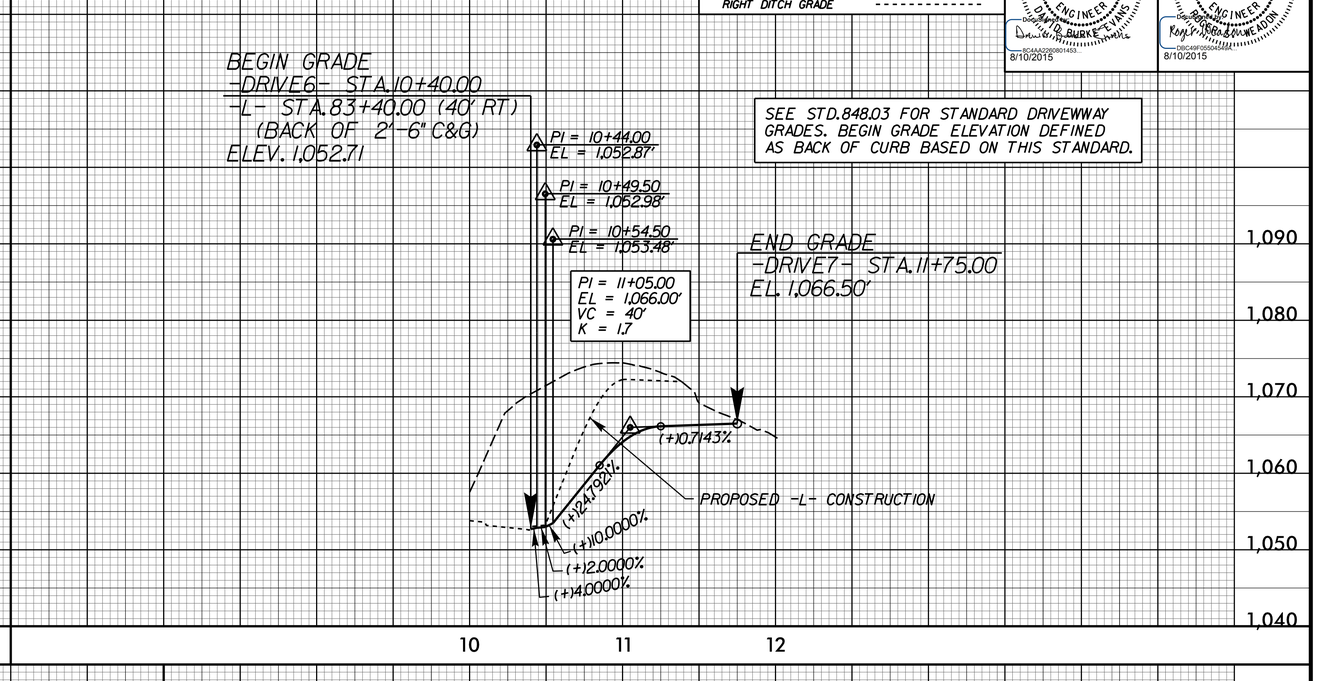

SEE STD.848.03 FOR STANDARD DRIVEWWAY GRADES. BEGIN GRADE ELEVATION DEFINED AS BACK OF CURB BASED ON THIS STANDARD.

-DRIVE6-

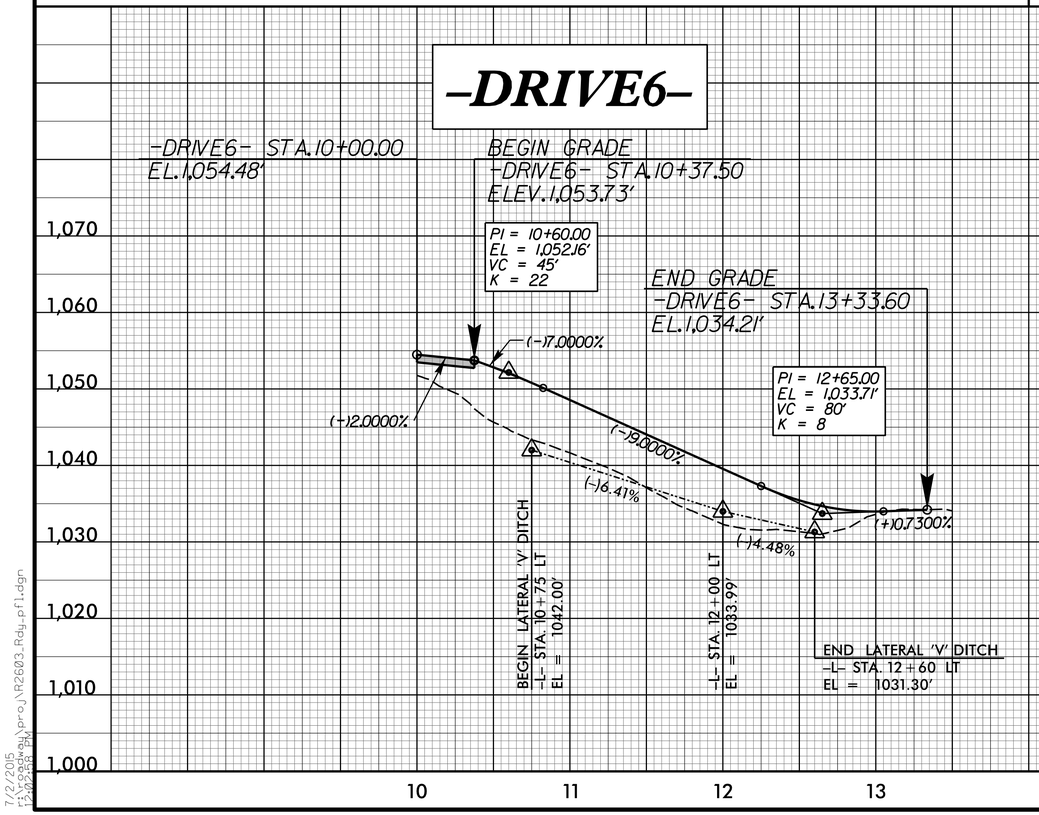

-DRIVE8-

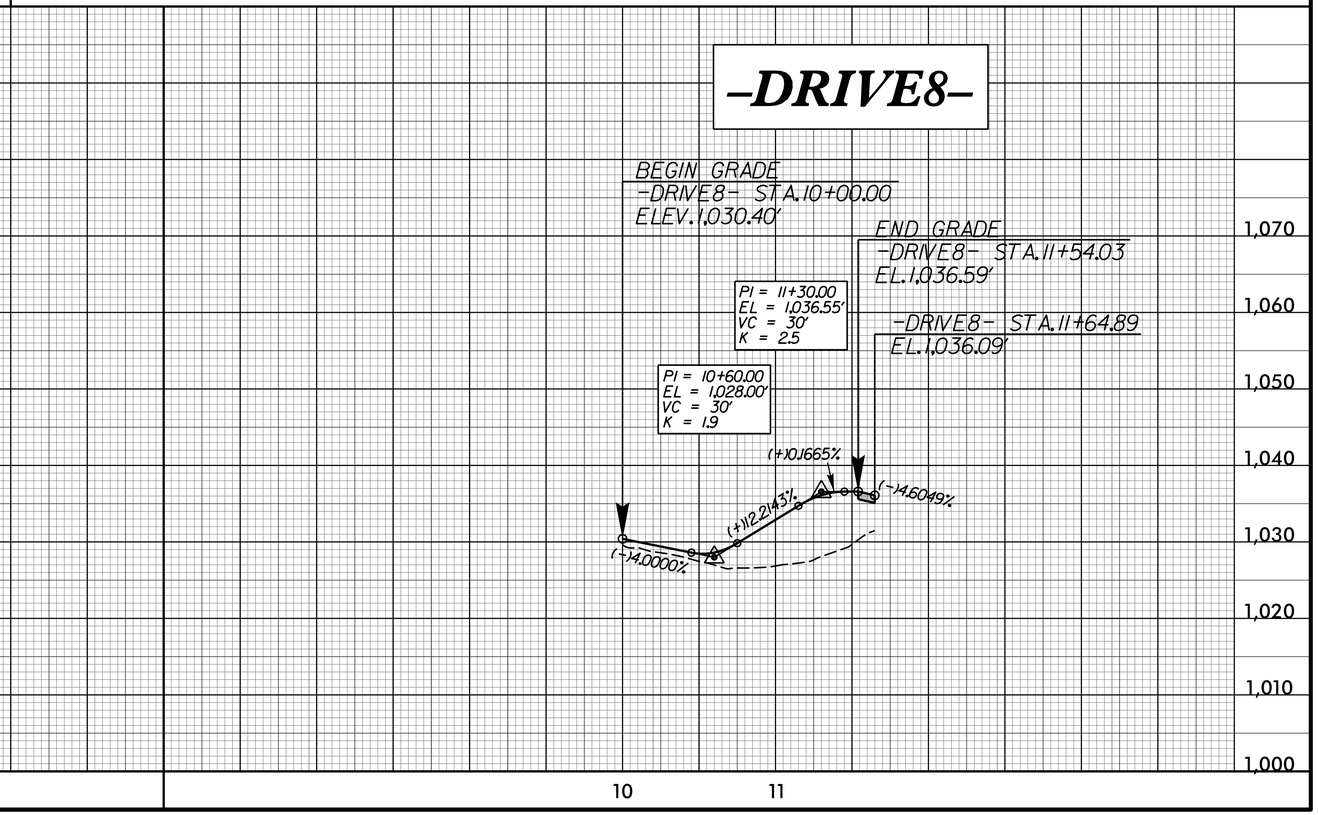

7/2/2015
12:09:34 PM
H:\proj\R2603_Rdy_pf1.dgn