STATE OF
NORTH CAROLINA
DEPT. OF TRANSPORTATION
DIVISION OF HIGHWAYS
RALEIGH, N.C.

ENGLISH DETAIL DRAWING FOR

CONCRETE ENDWALL FOR SINGLE 48″ R.C. PIPE AND 18″ R.C. PIPE

SHEET 1 OF 1

838D01

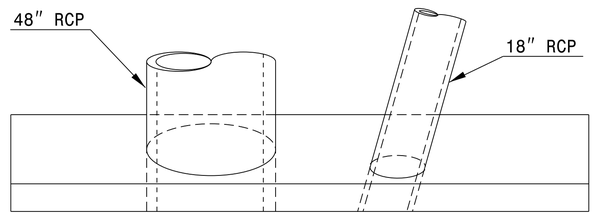

PLAN

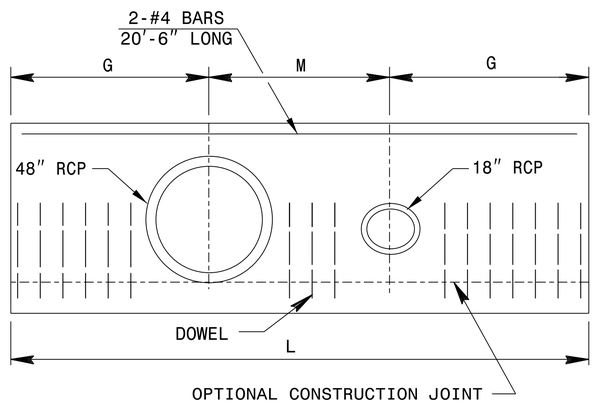

ELEVATION

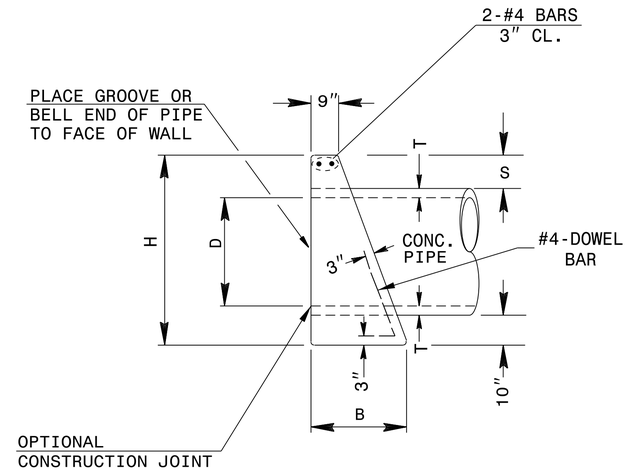

END ELEVATION

* 18″ RCP NOT SHOWN FOR CLARITY

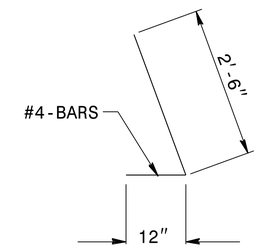

DOWEL

DIMENSIONS AND CONCRETE QUANTITIES									
USING CONCRETE PIPE									
	COMMON DIMENSIONS					DOUBLE PIPE			
D	H	B	G	T	S	M	L	YD^3	REINF. STEEL
48″	6′-9″	3′-5″	7′-2″	5¾″	11½″	6′-8″	21′-0″	8.0	60.0

GENERAL NOTES:

CONSTRUCT ENDWALL IN ACCORDANCE WITH SECTION 838 OF THE STANDARD SPECIFICATIONS AND THIS DETAIL.

FORMS ARE TO BE USED FOR THE CONSTRUCTION OF THE BASE.

WHEN THE CONTRACTOR ELECTS TO USE A CONSTRUCTION JOINT AT THE BOTTOM OF THE PIPE, DOWELS SHALL BE PLACED IN THE BASE AS SHOWN ON PLANS. SPACING OF BARS IS TO BE APPROXIMATELY 12″ CENTERS UNLESS OTHERWISE DIRECTED BY THE ENGINEER.

CLASS "B" CONCRETE SHALL BE USED.

MITRE HEADWALL FOR 24″ C.M. PIPE AS SHOWN IN STANDARD DRAWING 838.01.

STATE OF
NORTH CAROLINA
DEPT. OF TRANSPORTATION
DIVISION OF HIGHWAYS
RALEIGH, N.C.

ENGLISH DETAIL DRAWING FOR

CONCRETE ENDWALL FOR SINGLE 48″ R.C. PIPE AND 18″ R.C. PIPE

SHEET 1 OF 1

838D01

STR.#0916 & #0917

8/11/2015

NORTH CAROLINA PROFESSIONAL SEAL 022966 ENGINEER JOEL S. HOWERTON

DocuSigned by: Joel Howerton
873F3D17DCDC45F...

CONTRACT STANDARDS AND DEVELOPMENT UNIT
Office 919-707-6950 FAX 919-250-4119

SEE PLATE FOR TITLE

ORIGINAL BY: _____ DATE: _____
MODIFIED BY: KKEMPF DATE: JUNE 2015
CHECKED BY: _____ DATE: _____
FILE SPEC.: details/kkempf/english/R2603_838d01.dgn

05-JUN-2015 12:22
S:\Contracts\Contracts\Special Details\kkempf\english\R2603_838d01.dgn
$$$$USERNAME$$$$