This electronic collection of documents is provided for the convenience of the user and is Not a Certified Document –

The documents contained herein were originally issued and sealed by the individuals whose names and license numbers appear on each page, on the dates appearing with their signature on that page.
This file or an individual page shall not be considered a certified document.

09/08/99

TIP PROJECT: R-2915B

CONTRACT: C203594

See Sheet 1-A For Index of Sheets
See Sheet 1-B For Conventional Symbols

STATE OF NORTH CAROLINA
DIVISION OF HIGHWAYS

ASHE COUNTY

STATE	STATE PROJECT REFERENCE NO.	SHEET NO.	TOTAL SHEETS
N.C.	R-2915B	1	

STATE PROJ. NO.	F. A. PROJ. NO.	DESCRIPTION
34518.1.3	STP-0221(40)	P.E.
34518.2.FR2	STP-0221(40)	R /W
34518.2.FRU2	STP-0221(40)	UTILITIES
34518.3.7		CONST.

LOCATION: US 221 FROM SR 1003 (IDLEWILD ROAD) TO NORTH OF SOUTH FORK NEW RIVER

TYPE OF WORK: GRADING, DRAINAGE, PAVING, CULVERT AND STRUCTURES

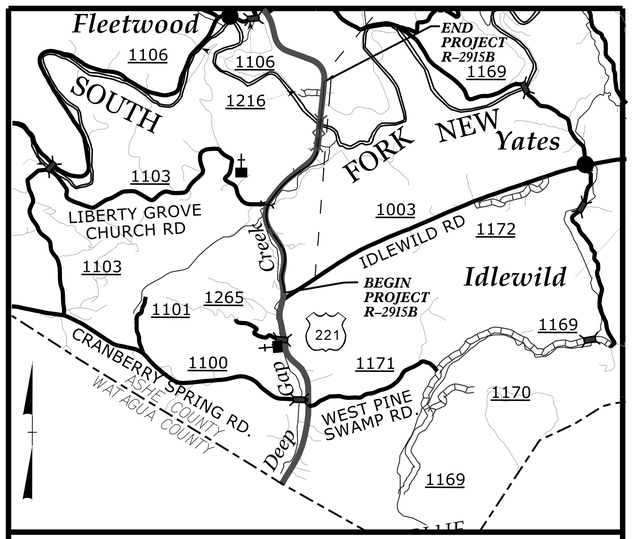

VICINITY MAP

NAD 83/CORS

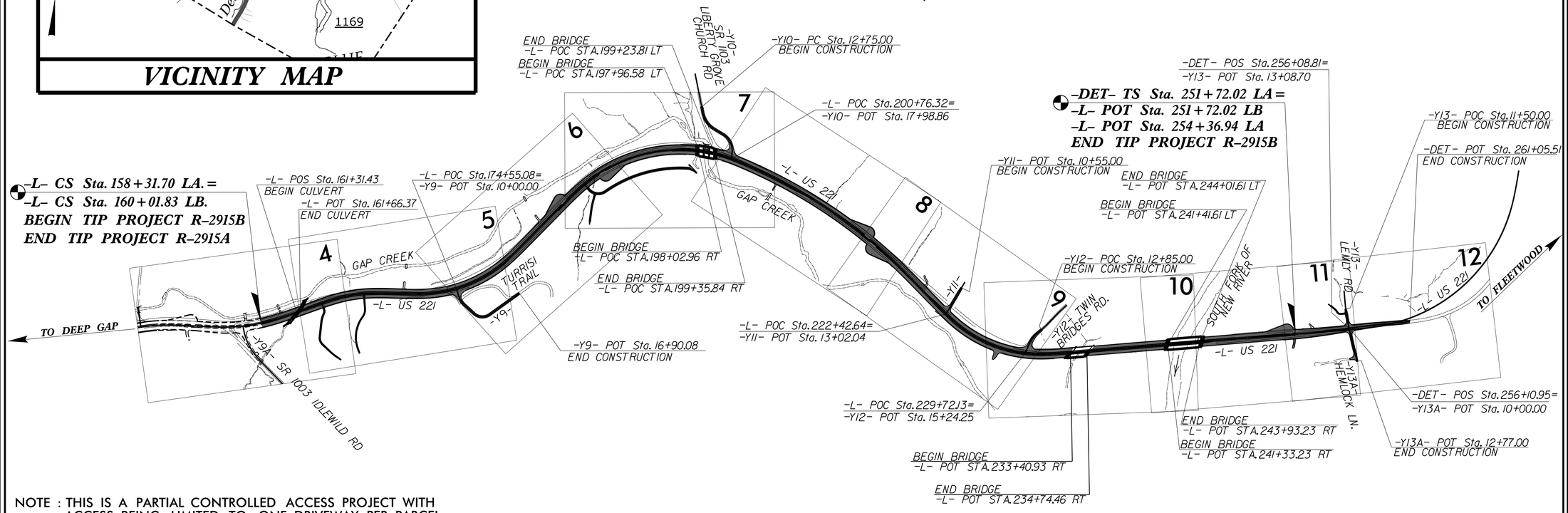

NOTE : THIS IS A PARTIAL CONTROLLED ACCESS PROJECT WITH ACCESS BEING LIMITED TO ONE DRIVEWAY PER PARCEL.

GRAPHIC SCALES

50 25 0 50 100
PLANS

50 25 0 50 100
PROFILE (HORIZONTAL)

10 5 0 10 20
PROFILE (VERTICAL)

DESIGN DATA

ADT 2015 = 12,089
ADT 2035 = 20,204
K = 10 %
D = 65 %
T = 9 % *
V = 50 MPH
* TTST 2% DUAL 7%
FUNC CLASS = ARTERIAL
STATEWIDE TIER

PROJECT LENGTH

LENGTH ROADWAY TIP PROJECT R-2915B = 1.663 MILES
LENGTH STRUCTURE TIP PROJECT R-2915B = 0.106 MILES
TOTAL LENGTH TIP PROJECT R-2915B = 1.769 MILES

Prepared In the Office of:
CDM Smith
5400 Glenwood Avenue, Suite 400, Raleigh, NC 27612
FOR THE NCDOT DIVISION OF HIGHWAYS

2012 STANDARD SPECIFICATIONS

RIGHT OF WAY DATE:
SEPTEMBER 30, 2013

LETTING DATE:
SEPTEMBER 15, 2015

DOUGLAS B. SAUNDERS, P.E.
PROJECT ENGINEER

DAVID J. CLODGO, P.E.
PROJECT DESIGN ENGINEER

REKHA V. PATEL, P.E.
NCDOT CONTACT

HYDRAULICS ENGINEER
7/17/2015
DocuSigned by: W. Henry Wells Jr.
SIGNATURE:
NORTH CAROLINA PROFESSIONAL SEAL 9334 ENGINEER W. HENRY WELLS JR. P.E.

ROADWAY DESIGN ENGINEER
7/17/2015
DocuSigned by: Douglas B. Saunders, PE
SIGNATURE:
NORTH CAROLINA PROFESSIONAL SEAL 14160 ENGINEER DOUGLAS B. SAUNDERS P.E.

STATE OF NORTH CAROLINA DEPARTMENT OF TRANSPORTATION

7/10/2015 10:24:25 AM
\Pr01\R2915B_RDY_TSH_01.dgn
USER: CL0D60DJ

INDEX OF SHEETS

SHEET NUMBER	TITLE
1	TITLE SHEET
1A	INDEX OF SHEETS, GENERAL NOTES AND LIST OF STANDARDS
1B	CONVENTIONAL SYMBOLS
1C–1 THRU 1C–4	SURVEY CONTROL SHEETS
2A–1 THRU 2A–5	PAVEMENT SCHEDULE AND TYPICAL SECTIONS
2B–1 THRU 2B–2	U–TURN BULB DETAILS
2B–3	CANOE ACCES DETAIL
2C–1	GUARDRAIL ANCHOR UNIT TYPE B–77 FOR F–SHAPE BARRIER
2C–2	2'–9" CONCRETE CURB AND GUTTER
2C–3	DETAIL OF 2'–9" TO FRAME AND GRATE
2C–4	GUIDE FOR BERM DRAINAGE OUTLET
2C–5	DETAIL OF EXTRA DEPTH 36" JUNCTION BOX
2D–1	DRAINAGE DITCH DETAILS
2D–2	DRAINAGE DETAIL FOR FILTER BERM SECTION AND PREFORMED SCOUR HOLE
2D–3	DRAINAGE DETAIL FOR SKEWED MULTI–BARREL CULVERT LOW FLOW CHANNEL, SILLS AND FLOOD PLAIN
2G–1 THRU 2G–3	TEMPORARY SHORING DETAILS
3B–1	GUARDRAIL SUMMARY
3B–2	SUMMARIES OF PAVEMENT REMOVAL, BREAKING OF EXISTING ASPHALT PAVEMENT, SHOULDER BERM GUTTER, WOVEN WIRE FENCE, AND BARBED WIRE FENCE
3B–3	SUMMARY OF EARTHWORK
3D–1 THRU 3D–5	DRAINAGE SUMMARIES FOR PIPES 48" AND UNDER
3D–6	DRAINAGE SUMMARIES FOR PIPES 54" AND OVER
3G–1	SUMMARIES OF GEOTEXTILE FOR PAVEMENT STABILIZATION, SUBSURFACE DRAINAGE, AND AGGREGATE SUBGRADE / STABILIZATION
3P–1	PARCEL INDEX SHEET
4 THRU 12	PLAN SHEETS
13 THRU 21	PROFILE SHEETS
TMP–1 THRU TMP–22	TRANSPORTATION MANAGEMENT PLANS
PMP–1 THRU PMP–10	PAVEMENT MARKING PLANS
EC–1 THRU EC–21	EROSION CONTROL PLANS
RF–1	REFORESTATION PLAN
SIGN–1 THRU SIGN–11	SIGNING PLANS
UO–1 THRU UO–10	UTILITY BY OTHERS
X–1 THRU X–179	CROSS SECTIONS
S01–1 THRU S01–34	STRUCTURE PLANS
S02–1 THRU S02–34	STRUCTURE PLANS
S03–1 THRU S03–30	STRUCTURE PLANS
S04–1 THRU S04–35	STRUCTURE PLANS
S05–1 THRU S05–35	STRUCTURE PLANS
C–1 THRU C–13	CULVERT PLANS
W–1 THRU W–4	RETAINING WALL PLANS

GENERAL NOTES

GENERAL NOTES: 2012 SPECIFICATIONS

EFFECTIVE: 01–17–2012
REVISED: 07–30–2012

GRADE LINE:
GRADING AND SURFACING:

THE GRADE LINES SHOWN DENOTE THE FINISHED ELEVATION OF THE PROPOSED SURFACING AT GRADE POINTS SHOWN ON THE TYPICAL SECTIONS. GRADE LINES MAY BE ADJUSTED AT THEIR BEGINNING AND ENDING AND AT STRUCTURES AS DIRECTED BY THE ENGINEER IN ORDER TO SECURE A PROPER TIE–IN.

CLEARING:

CLEARING ON THIS PROJECT SHALL BE PERFORMED TO THE LIMITS ESTABLISHED BY METHOD III.

SUPERELEVATION:

ALL CURVES ON THIS PROJECT SHALL BE SUPERELEVATED IN ACCORDANCE WITH STD. NO. 225.04 AND/OR STD. NO. 225.05 USING THE RATE OF SUPERELEVATION AND RUNOFF SHOWN ON THE PLANS. SUPERELEVATION IS TO BE REVOLVED ABOUT THE GRADE POINTS SHOWN ON THE TYPICAL SECTIONS.

SHOULDER CONSTRUCTION:

ASPHALT, EARTH, AND CONCRETE SHOULDER CONSTRUCTION ON THE HIGH SIDE OF SUPERELEVATED CURVES SHALL BE IN ACCORDANCE WITH STD. NO. 560.01

SIDE ROADS:

THE CONTRACTOR WILL BE REQUIRED TO DO ALL NECESSARY WORK TO PROVIDE SUITABLE CONNECTIONS WITH ALL ROADS, STREETS, AND DRIVES ENTERING THIS PROJECT. THIS WORK WILL BE PAID FOR AT THE CONTRACT UNIT PRICE FOR THE PARTICULAR ITEMS INVOLVED.

BERM DITCHES:

BERM DITCHES SHALL BE CONSTRUCTED IN ACCORDANCE WITH STD. NO. 240.01 AT LOCATIONS SHOWN ON THE PLANS OR AS DIRECTED BY THE ENGINEER.

SUBSURFACE DRAINS:

SUBSURFACE DRAINS SHALL BE CONSTRUCTED IN ACCORDANCE WITH STD. NO. 815.02 AT LOCATIONS DIRECTED BY THE ENGINEER.

GUARDRAIL:

THE GUARDRAIL LOCATIONS SHOWN ON THE PLANS MAY BE ADJUSTED DURING CONSTRUCTION AS DIRECTED BY THE ENGINEER. THE CONTRACTOR SHOULD CONSULT WITH THE ENGINEER PRIOR TO ORDERING GUARDRAIL MATERIAL.

TEMPORARY SHORING:

SHORING REQUIRED FOR THE MAINTENANCE OF TRAFFIC NOT SHOWN ON THE PLANS WILL BE PAID FOR AT THE CONTRACT PRICE FOR "TEMPORARY SHORING".

END BENTS:

THE ENGINEER SHALL CHECK THE STRUCTURE END BENT PLANS, DETAILS, AND CROSS–SECTION PRIOR TO SETTING OF THE SLOPE STAKES FOR THE EMBANKMENT OR EXCAVATION APPROACHING A BRIDGE.

UTILITIES:

UTILITY OWNERS ON THIS PROJECT ARE Blue Ridge EMC

Skyline Telephone

ANY RELOCATION OF EXISTING UTILITIES WILL BE ACCOMPLISHED BY OTHERS.

RIGHT–OF–WAY MARKERS:

ALL RIGHT–OF–WAY MARKERS ON THIS PROJECT SHALL BE PLACED BY OTHERS.

ROCK

ROCK IS ANTICIPATED BETWEEN STA 158+31.70 TO STA 216+00.00. BLASTING MAY BE REQUIRED FOR EXCAVATION ON THE PROJECT. SEE SECTION 220 OF THE STANDARD SPECIFICATIONS AND IF APPLICABLE, ROCK BLASTING PROVISION.

STANDARD DRAWINGS

EFF. 01–17–2012
REV. 10–30–2012

2012 ROADWAY ENGLISH STANDARD DRAWINGS

THE FOLLOWING ROADWAY STANDARDS AS APPEAR IN "ROADWAY STANDARD DRAWINGS" HIGHWAY DESIGN BRANCH –

N. C. DEPARTMENT OF TRANSPORTATION – RALEIGH, N. C., DATED JANUARY, 2012 ARE APPLICABLE TO THIS PROJECT AND BY REFERENCE HEREBY ARE CONSIDERED A PART OF THESE PLANS:

STD.NO.	TITLE
DIVISION 2 – EARTHWORK	
200.03	METHOD OF CLEARING – METHOD III
225.01	GUIDE FOR GRADING SUBGRADE – INTERSTATE AND FREEWAY
225.02	GUIDE FOR GRADING SUBGRADE – SECONDARY AND LOCAL
225.04	METHOD OF OBTAINING SUPERELEVATION – TWO LANE PAVEMENT
225.05	METHOD OF OBTAINING SUPERELEVATION – DIVIDED HIGHWAYS
225.06	METHOD OF GRADING SIGHT DISTANCE AT INTERSECTIONS
240.01	GUIDE FOR BERM DITCH CONSTRUCTION
DIVISION 3 – PIPE CULVERTS	
300.01	METHOD OF PIPE INSTALLATION
310.10	DRIVEWAY PIPE CONSTRUCTION
DIVISION 4 – MAJOR STRUCTURES	
422.10	REINFORCED BRIDGE APPROACH FILLS
DIVISION 5 – SUBGRADE, BASES AND SHOULDERS	
560.01	METHOD OF SHOULDER CONSTRUCTION – HIGH SIDE OF SUPERELEVATED CURVE – METHOD I
DIVISION 6 – ASPHALT BASES AND PAVEMENTS	
654.01	PAVEMENT REPAIRS
DIVISION 8 – INCIDENTALS	
815.02	SUBSURFACE DRAIN
838.27	REINFORCED CONCRETE ENDWALL – FOR SINGLE 60" PIPE 90 SKEW
838.45	NOTES FOR REINFORCED CONCRETE ENDWALL – STD. DWG 838.21 THRU 838.40
838.57	REINFORCED BRICK ENDWALL – FOR SINGLE 60" PIPE 90 SKEW
838.75	NOTES FOR REINFORCED BRICK ENDWALL – STD. DWG 838.51 THRU 838.70
840.00	CONCRETE BASE PAD FOR DRAINAGE STRUCTURES
840.14	CONCRETE DROP INLET – 12" THRU 30" PIPE
840.15	BRICK DROP INLET – 12" THRU 30" PIPE
840.16	DROP INLET FRAME AND GRATES – FOR USE WITH STD. DWG 840.14 AND 840.15
840.17	CONCRETE GRATED DROP INLET TYPE 'A' – 12" THRU 72" PIPE
840.18	CONCRETE GRATED DROP INLET TYPE 'B' – 12" THRU 36" PIPE
840.20	FRAMES AND WIDE SLOT FLAT GRATES
840.22	FRAMES AND WIDE SLOT SAG GRATES
840.24	FRAMES AND NARROW SLOT SAG GRATES
840.25	ANCHORAGE FOR FRAMES – BRICK OR CONCRETE OR PRECAST
840.26	BRICK GRATED DROP INLET TYPE 'A' – 12" THRU 72" PIPE
840.27	BRICK GRATED DROP INLET TYPE 'B' – 12" THRU 36" PIPE
840.34	TRAFFIC BEARING JUNCTION BOX – FOR USE WITH PIPES 42" AND UNDER
840.35	TRAFFIC BEARING GRATED DROP INLET – FOR CAST IRON DOUBLE FRAME AND GRATES
840.41	SPRING BOX – CONCRETE OR BRICK
840.45	PRECAST DRAINAGE STRUCTURE
840.46	TRAFFIC BEARING PRECAST DRAINAGE STRUCTURE
840.54	MANHOLE FRAME AND COVER
840.66	DRAINAGE STRUCTURE STEPS
840.72	PIPE COLLAR
846.01	CONCRETE CURB, GUTTER AND CURB & GUTTER
846.04	DROP INLET INSTALLATION IN SHOULDER BERM GUTTER
850.01	CONCRETE PAVED DITCHES
850.10	GUIDE FOR BERM DRAINAGE OUTLET – 15" AND 18" PIPE
850.11	GUIDE FOR BERM DRAINAGE OUTLET – 24" AND 30" PIPE
852.01	CONCRETE ISLANDS
852.06	METHOD FOR PLACEMENT OF DROP INLETS IN CONCRETE ISLANDS
862.01	GUARDRAIL PLACEMENT
862.02	GUARDRAIL INSTALLATION
862.04	ANCHORING END OF GUARDRAIL – B–77 AND B–83 ANCHOR UNITS
866.02	WOVEN WIRE FENCE – WITH WOOD POST
866.04	BARBED WIRE FENCE WITH WOOD POSTS (2 – 7 STRANDS)
876.01	RIP RAP IN CHANNELS
876.02	GUIDE FOR RIP RAP AT PIPE OUTLETS
876.04	DRAINAGE DITCHES WITH CLASS 'B' RIP RAP

PROJECT REFERENCE NO.	SHEET NO.
R–2915B	1A
R/W SHEET NO.	

ROADWAY DESIGN ENGINEER

7/29/2015

NORTH CAROLINA PROFESSIONAL SEAL 14160 ENGINEER DOUGLAS B. SAUNDERS

DocuSigned by:
Douglas B. Saunders, P.E.

CDM Smith
Camp Dresser & McKee
5400 Glenwood Avenue
Suite 300
Raleigh, NC 27612-3228
NC COA No. F-0412

SUNGATE DESIGN GROUP, P.A.
915 JONES FRANKLIN ROAD
RALEIGH, NORTH CAROLINA 27606
NC COA No. C-0890

REVISIONS

5/14/99
7/29/2015 8:51:47 AM
USER: rchandler
USFA: rdy_psh_01A.dgn

PROJECT REFERENCE NO.	SHEET NO.
R-2915B	1B

STATE OF NORTH CAROLINA, DIVISION OF HIGHWAYS

CONVENTIONAL PLAN SHEET SYMBOLS

Note: Not to Scale **S.U.E. = Subsurface Utility Engineering*

BOUNDARIES AND PROPERTY:

- State Line
- County Line
- Township Line
- City Line
- Reservation Line
- Property Line
- Existing Iron Pin — EIP
- Property Corner
- Property Monument — ECM
- Parcel/Sequence Number — 123
- Existing Fence Line
- Proposed Woven Wire Fence
- Proposed Chain Link Fence
- Proposed Barbed Wire Fence
- Existing Wetland Boundary — WLB
- Proposed Wetland Boundary — WLB
- Existing Endangered Animal Boundary — EAB
- Existing Endangered Plant Boundary — EPB
- Existing Historic Property Boundary — HPB
- Known Contamination Area: Soil
- Potential Contamination Area: Soil
- Known Contamination Area: Water
- Potential Contamination Area: Water
- Contaminated Site: Known or Potential

BUILDINGS AND OTHER CULTURE:

- Gas Pump Vent or U/G Tank Cap
- Sign — S
- Well — W
- Small Mine
- Foundation
- Area Outline
- Cemetery
- Building
- School
- Church
- Dam

HYDROLOGY:

- Stream or Body of Water
- Hydro, Pool or Reservoir
- Jurisdictional Stream — JS
- Buffer Zone 1 — BZ 1
- Buffer Zone 2 — BZ 2
- Flow Arrow
- Disappearing Stream
- Spring
- Wetland
- Proposed Lateral, Tail, Head Ditch — FLOW
- False Sump

RAILROADS:

- Standard Gauge — CSX TRANSPORTATION
- RR Signal Milepost — MILEPOST 35
- Switch — SWITCH
- RR Abandoned
- RR Dismantled

RIGHT OF WAY:

- Baseline Control Point
- Existing Right of Way Marker
- Existing Right of Way Line
- Proposed Right of Way Line — RW
- Proposed Right of Way Line with Iron Pin and Cap Marker — RW
- Proposed Right of Way Line with Concrete or Granite R/W Marker — RW
- Proposed Control of Access Line with Concrete C/A Marker — CA
- Existing Control of Access — CA
- Proposed Control of Access — CA
- Existing Easement Line — E
- Proposed Temporary Construction Easement — E
- Proposed Temporary Drainage Easement — TDE
- Proposed Permanent Drainage Easement — PDE
- Proposed Permanent Drainage / Utility Easement — DUE
- Proposed Permanent Utility Easement — PUE
- Proposed Temporary Utility Easement — TUE
- Proposed Aerial Utility Easement — AUE
- Proposed Permanent Easement with Iron Pin and Cap Marker

ROADS AND RELATED FEATURES:

- Existing Edge of Pavement
- Existing Curb
- Proposed Slope Stakes Cut — C
- Proposed Slope Stakes Fill — F
- Proposed Curb Ramp — CR
- Existing Metal Guardrail
- Proposed Guardrail
- Existing Cable Guiderail
- Proposed Cable Guiderail
- Equality Symbol
- Pavement Removal

VEGETATION:

- Single Tree
- Single Shrub
- Hedge
- Woods Line
- Orchard
- Vineyard — Vineyard

EXISTING STRUCTURES:

MAJOR:

- Bridge, Tunnel or Box Culvert — CONC
- Bridge Wing Wall, Head Wall and End Wall — CONC WW

MINOR:

- Head and End Wall — CONC HW
- Pipe Culvert
- Footbridge
- Drainage Box: Catch Basin, DI or JB — CB
- Paved Ditch Gutter
- Storm Sewer Manhole — S
- Storm Sewer — S

UTILITIES:

POWER:

- Existing Power Pole
- Proposed Power Pole
- Existing Joint Use Pole
- Proposed Joint Use Pole
- Power Manhole — P
- Power Line Tower
- Power Transformer
- U/G Power Cable Hand Hole
- H-Frame Pole
- U/G Power Line LOS B (S.U.E.*) — P
- U/G Power Line LOS C (S.U.E.*) — P
- U/G Power Line LOS D (S.U.E.*) — P

TELEPHONE:

- Existing Telephone Pole
- Proposed Telephone Pole
- Telephone Manhole — T
- Telephone Pedestal — T
- Telephone Cell Tower
- U/G Telephone Cable Hand Hole — HH
- U/G Telephone Cable LOS B (S.U.E.*) — T
- U/G Telephone Cable LOS C (S.U.E.*) — T
- U/G Telephone Cable LOS D (S.U.E.*) — T
- U/G Telephone Conduit LOS B (S.U.E.*) — TC
- U/G Telephone Conduit LOS C (S.U.E.*) — TC
- U/G Telephone Conduit LOS D (S.U.E.*) — TC
- U/G Fiber Optics Cable LOS B (S.U.E.*) — T FO
- U/G Fiber Optics Cable LOS C (S.U.E.*) — T FO
- U/G Fiber Optics Cable LOS D (S.U.E.*) — T FO

WATER:

- Water Manhole — W
- Water Meter
- Water Valve
- Water Hydrant
- U/G Water Line LOS B (S.U.E*)
- U/G Water Line LOS C (S.U.E*)
- U/G Water Line LOS D (S.U.E*) — W
- Above Ground Water Line — A/G Water

TV:

- TV Pedestal — C
- TV Tower
- U/G TV Cable Hand Hole — HH
- U/G TV Cable LOS B (S.U.E.*) — TV
- U/G TV Cable LOS C (S.U.E.*) — TV
- U/G TV Cable LOS D (S.U.E.*) — TV
- U/G Fiber Optic Cable LOS B (S.U.E.*) — TV FO
- U/G Fiber Optic Cable LOS C (S.U.E.*) — TV FO
- U/G Fiber Optic Cable LOS D (S.U.E.*) — TV FO

GAS:

- Gas Valve
- Gas Meter
- U/G Gas Line LOS B (S.U.E.*) — G
- U/G Gas Line LOS C (S.U.E.*) — G
- U/G Gas Line LOS D (S.U.E.*) — G
- Above Ground Gas Line — A/G Gas

SANITARY SEWER:

- Sanitary Sewer Manhole
- Sanitary Sewer Cleanout
- U/G Sanitary Sewer Line — SS
- Above Ground Sanitary Sewer — A/G Sanitary Sewer
- SS Forced Main Line LOS B (S.U.E.*) — FSS
- SS Forced Main Line LOS C (S.U.E.*) — FSS
- SS Forced Main Line LOS D (S.U.E.*) — FSS

MISCELLANEOUS:

- Utility Pole
- Utility Pole with Base
- Utility Located Object
- Utility Traffic Signal Box — S
- Utility Unknown U/G Line LOS B (S.U.E.*) — ?UTL
- U/G Tank; Water, Gas, Oil
- Underground Storage Tank, Approx. Loc. — UST
- A/G Tank; Water, Gas, Oil
- Geoenvironmental Boring
- U/G Test Hole LOS A (S.U.E.*)
- Abandoned According to Utility Records — AATUR
- End of Information — E.O.I.

REVISIONS

04/06/15

6/26/2015 8:08:00 AM
R:\Roadway\Proj\0915B_SHEET_01B.DGN
USER: mjl MANE_1

PROJECT REFERENCE NO.	SHEET NO.
R-2915B	1C-1
Location and Surveys	

SURVEY CONTROL SHEET R-2915B

BL

POINT	DESC.	NORTH	EAST	ELEVATION	L STATION	OFFSET
BL46	BL-46	928402.6058	1262144.5944	2906.40	164+57.70	59.72 LT
BL47	BL-47	929326.9840	1262283.2690	2910.77	173+86.62	21.84 LT
BL48	BL-48	929833.8683	1262134.0936	2912.87	179+30.93	18.77 LT
BL49	BL-49	930252.5771	1261808.4631	2904.69	184+62.04	52.22 LT
BL50	BL-50	930705.0036	1261535.6732	2897.84	189+78.77	56.31 LT
BL51	BL-51	931116.0346	1261433.0556	2890.72	193+82.19	74.07 LT
BL52	BL-52	931641.1471	1261537.6793	2881.92	198+92.50	62.93 LT
BL53	BL-53	932216.8529	1261999.6996	2876.74	206+18.26	5.40 RT
BL54	BL-54	932765.6058	1262461.6063	2874.49	213+30.49	49.96 LT
BL55	BL-55	933354.5662	1263260.6930	2871.17	223+21.60	61.35 LT
BL56	BL-56	933897.1980	1263665.8120	2870.83	230+36.98	17.88 LT
BL57	BL-57	934899.1246	1263792.5538	2870.93	240+49.66	7.77 LT
BL58	BL-58	935740.1689	1263880.7456	2884.86	248+95.32	7.08 LT

BY6

POINT	DESC.	NORTH	EAST	ELEVATION	Y10 STATION	OFFSET
BY680	BY6-80	931624.6900	1260669.6512	2913.15	OUTSIDE PROJECT LIMITS	
BY681	BY6-81	931641.1471	1261537.6793	2881.92	15+36.22	122.93 RT

BY7

POINT	DESC.	NORTH	EAST	ELEVATION	Y13 STATION	OFFSET
BY782	BY7-82	936407.6723	1263268.6732	2888.19	OUTSIDE PROJECT LIMITS	
BY783	BY7-83	936468.4871	1263464.0511	2903.80	OUTSIDE PROJECT LIMITS	
BY784	BY7-84	936429.4463	1263916.1701	2937.49	12+75.74	20.96 RT

BM7 ELEVATION = 2900.68
N 927977 E 1262292
L STATION 160+18.00 24 RIGHT
CHISELED SQUARE IN CONCRETE FLOOR OF TELEPHONE EXCHANGE

BM8 ELEVATION = 2881.14
N 930658 E 1261410
L STATION 189+80.00 191 LEFT
RR SPIKE IN 30" WHITE PINE

BM9 ELEVATION = 2871.28
N 932968 E 1262584
L STATION 215+49.00 130 LEFT
RR SPIKE IN ROOT OF 24" FORKED CHERRY TREE

BM10 ELEVATION = 2974.62
N 936805 E 1263884
L STATION 161+56.00
N 10°39'23.54" E DIST 8848.34
RR SPIKE IN ROOT OF 8" WHITE PINE

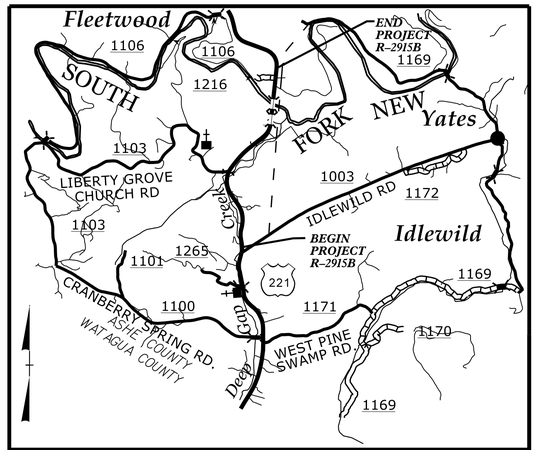

VICINITY MAP

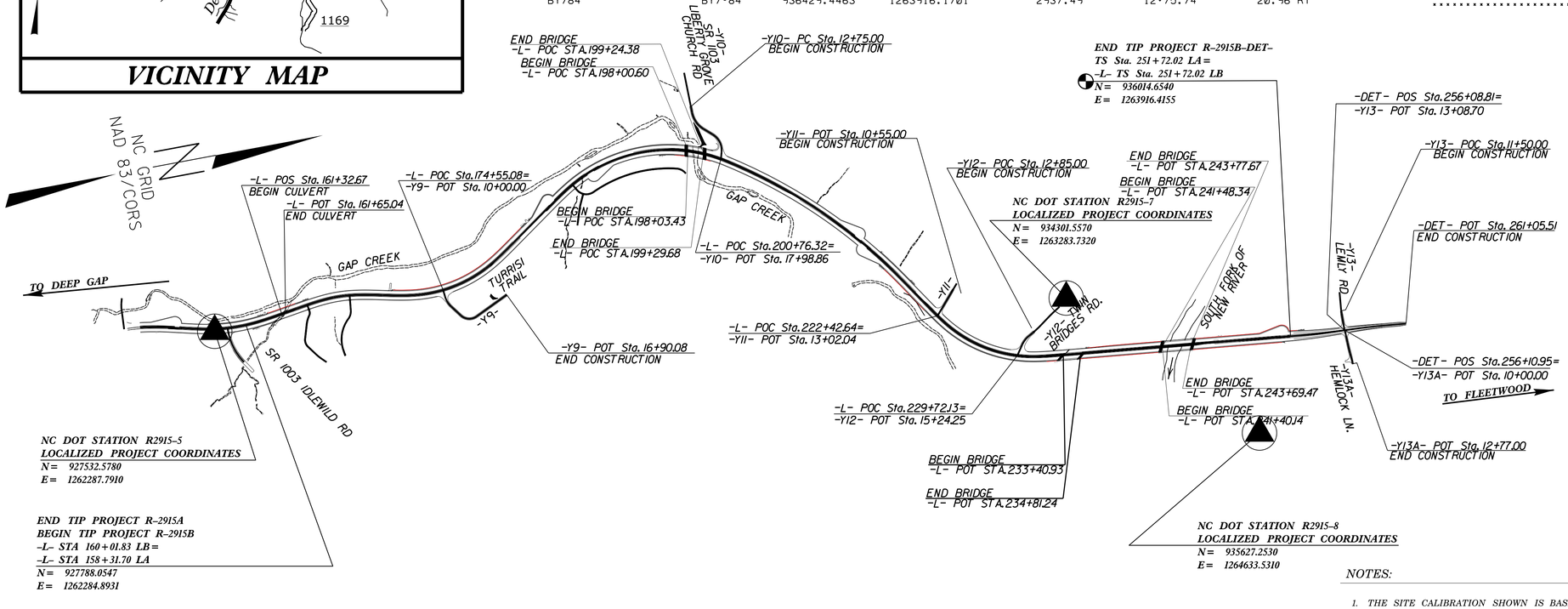

NC DOT STATION R2915-6
LOCALIZED PROJECT COORDINATES
N= 926551.4520
E= 1265372.0870

DATUM DESCRIPTION

THE LOCALIZED COORDINATE SYSTEM DEVELOPED FOR THIS PROJECT IS BASED ON THE STATE PLANE COORDINATES ESTABLISHED BY NCDOT FOR MONUMENT "R2915-15"
WITH NAD 83/CORS STATE PLANE GRID COORDINATES OF
NORTHING: 954880.7810(ft) EASTING: 1254012.2870(ft)
ELEVATION: 3097.5210(ft)
THE AVERAGE COMBINED GRID FACTOR USED ON THIS PROJECT (GROUND TO GRID) IS: 0.99991292
THE N.C. LAMBERT GRID BEARING AND LOCALIZED HORIZONTAL GROUND DISTANCE FROM "R2915-15" TO -L- STATION 158+31.70 IS
S 16°58'47" E 28327.5827
ALL LINEAR DIMENSIONS ARE LOCALIZED HORIZONTAL DISTANCES
VERTICAL DATUM USED IS NAVD 88

NOTE: DRAWING NOT TO SCALE

NOTES:

1. THE SITE CALIBRATION SHOWN IS BASED UPON A NETWORK TIED TO THE HARN (HIGH ACCURACY REFERENCE NETWORK) NAD 8395 ADJUSTMENT. THIS CALIBRATION WILL ALLOW THE END USER TO WORK WITHIN THE SAME COORDINATE SYSTEM WHEN USING RTK (REAL TIME KINEMATIC) GPS AND A LOCAL BASE STATION. IF ANOTHER SYSTEM SUCH AS VRS (VIRTUAL REFERENCE STATION) IS USED, ADDITIONAL FIELD TIES MAY BE NEEDED TO REDUCE POSSIBLE ERRORS, OR BIASES.

2. THE CONTROL DATA FOR THIS PROJECT CAN BE FOUND ELECTRONICALLY BY SELECTING PROJECT CONTROL DATA AT:
HTTPS://CONNECT.NCDOT.GOV/RESOURCES/LOCATION/

THE FILES TO BE FOUND ARE AS FOLLOWS:
R2915B_LS_GPSCALIB.HTML
R2915B_LS_WGS84.TXT
R2915B_LS_LOCAL.TXT
R2915B_LS_CONTROL.TXT

THE WGS84 AND LOCAL FILES ARE COMMA DELIMITED AND CAN BE USED TO REPRODUCE THE SITE CALIBRATION FOR THE END USER'S GPS EQUIPMENT. IF FURTHER INFORMATION IS NEEDED, PLEASE CONTACT THE LOCATION AND SURVEYS UNIT.

◎ INDICATES GEODETIC CONTROL MONUMENTS USED OR SET FOR HORIZONTAL PROJECT CONTROL BY THE NCDOT LOCATION AND SURVEYS UNIT.
PROJECT CONTROL ESTABLISHED USING GLOBAL POSITIONING SYSTEM.
SEE GPS CALIBRATION SHEET FOR HORIZONTAL AND VERTICAL COORDINATE VALUES.

6/2/99
29-JUL-2015 10:43
R:\Roadway\Proj\R2915B_LS_1C-1.dgn
$$$$USERNAME$$$$

6/2/99

PROJECT REFERENCE NO.	SHEET NO.
R-2915B	1C-2
Location and Surveys	

PRELIMINARY PLANS
DO NOT USE FOR CONSTRUCTION

SURVEY CONTROL SHEET R-2915B

GPS Calibration Report

Project : r2915abcde

TIP Number	r2915abcde		
User name	rlwagoner	**Date & Time**	8:15:20 AM 3/29/2010
Coordinate System	US State Plane 1983	**Zone**	North Carolina 3200
Horizontal Datum	NAD 1983 (Conus)		
Vertical Datum		**Geoid Model**	G03NC
Coordinate Units	US survey feet		
Distance Units	US survey feet		
Height Units	US survey feet		

LOCAL SITE INFORMATION

Localized around	
Latitude	N/A
Longitude	N/A
Site Scale Factor	N/A
Height	N/A

The North Carolina Department of Transportation uses a Localized Coordinate System which is very similar to North Carolina Zone 3200 from which it is derived.
Please take care in utilizing these coordinates to eliminate confusion of the two systems.
This file is to aid in the use of Real Time Kinematic (RTK) GPS during construction layout.

Datum Transformation Parameters

Datum Transformation computation not requested

Updated Default Projection (Transverse Mercator) Definition

Updated default projection not requested

Horizontal Adjustment Parameters

Northing coordinate of rotation center	947934.1223sft
Easting coordinate of rotation center	1262471.3754sft
Rotation about the center point	0°00'00"
Translation north	-0.6128sft
Translation east	0.7058sft
Scale factor	1.00008668

Vertical Adjustment Parameters

Northing coordinate of origin point	916355.6589sft
Easting coordinate of origin point	1255522.7706sft
Vertical separation at origin	0.0728sft
Slope north	2.018ppm
Slope east	-3.981ppm

Geoid Model Definition

G03NC

Residual Differences Between GPS (WGS84) And Local Coordinates

Summary

	Maximum error	Root Mean Square error	Point
Horizontal	0.037sft	0.006	R2915-23_WGS84
Vertical	0.080sft	0.010	R2915-23_WGS84
Three-dimensional	0.088sft	0.011	R2915-23_WGS84

Point Residuals

WGS84 Coordinates		Calculated point FOR DISPLAY ONLY		Local Coordinates	
Point	R2915-1 WGS84	Northing	916355.6589sft	Point R2915-1 Local	
Latitude	36°14'30.16499"N	Easting	1255522.7706sft	Northing	916355.6590sft
Longitude	81°31'28.80325"W	Elevation	3142.3037sft	Easting	1255522.7760sft
Height	3038.5989sft	Horz error	0.005sft	Elevation	3142.2840sft
		Vert error	0.020sft	Utilized	Horz and Vert
		3D error	0.020sft	Quality	Survey quality
Point	R2915-2_WGS84	Northing	915243.5295sft	Point R2915-2_Local	
Latitude	36°14'19.87328"N	Easting	1258316.3057sft	Northing	915243.5260sft
Longitude	81°30'54.37263"W	Elevation	3035.6772sft	Easting	1258316.3100sft
Height	2931.8298sft	Horz error	0.006sft	Elevation	3035.6720sft
		Vert error	0.005sft	Utilized	Horz and Vert
		3D error	0.008sft	Quality	Survey quality
Point	R2915-3_WGS84	Northing	919149.7074sft	Point R2915-3_Local	
Latitude	36°14'59.39661"N	Easting	1261969.9588sft	Northing	919149.7040sft
Longitude	81°30'10.99416"W	Elevation	2977.4067sft	Easting	1261969.9680sft
Height	2873.5914sft	Horz error	0.010sft	Elevation	2977.4070sft
		Vert error	0.000sft	Utilized	Horz and Vert
		3D error	0.010sft	Quality	Survey quality
Point	R2915-4_WGS84	Northing	920506.4892sft	Point R2915-4_Local	
Latitude	36°15'13.02239"N	Easting	1262832.0488sft	Northing	920506.4880sft
Longitude	81°30'00.89092"W	Elevation	2956.9814sft	Easting	1262832.0570sft
Height	2853.1869sft	Horz error	0.008sft	Elevation	2956.9900sft
		Vert error	0.009sft	Utilized	Horz and Vert
		3D error	0.012sft	Quality	Survey quality
Point	R2915-5 WGS84	Northing	927532.5716sft	Point R2915-5 Local	
Latitude	36°16'22.33517"N	Easting	1262287.7805sft	Northing	927532.5780sft
Longitude	81°30'09.69521"W	Elevation	2902.2729sft	Easting	1262287.7910sft
Height	2798.7405sft	Horz error	0.012sft	Elevation	2902.2770sft
		Vert error	0.004sft	Utilized	Horz and Vert
		3D error	0.013sft	Quality	Survey quality
Point	R2915-6 WGS84	Northing	929551.4461sft	Point R2915-6 Local	
Latitude	36°16'43.05751"N	Easting	1265372.0745sft	Northing	929551.4520sft
Longitude	81°29'32.66468"W	Elevation	3037.6229sft	Easting	1265372.0870sft
Height	2934.0460sft	Horz error	0.014sft	Elevation	3037.6360sft
		Vert error	0.013sft	Utilized	Horz and Vert
		3D error	0.019sft	Quality	Survey quality
Point	R2915-7 WGS84	Northing	934301.5436sft	Point R2915-7 Local	
Latitude	36°17'29.48965"N	Easting	1263283.7338sft	Northing	934301.5570sft
Longitude	81°29'59.61899"W	Elevation	2870.4241sft	Easting	1263283.7320sft
Height	2767.0788sft	Horz error	0.014sft	Elevation	2870.4170sft
		Vert error	0.007sft	Utilized	Horz and Vert
		3D error	0.015sft	Quality	Survey quality
Point	R2915-8_WGS84	Northing	935627.2416sft	Point R2915-8_Local	
Latitude	36°17'42.92890"N	Easting	1264633.5337sft	Northing	935627.2530sft
Longitude	81°29'43.54539"W	Elevation	2872.3172sft	Easting	1264633.5310sft
Height	2768.9685sft	Horz error	0.012sft	Elevation	2872.3310sft
		Vert error	0.014sft	Utilized	Horz and Vert
		3D error	0.018sft	Quality	Survey quality
Point	R2915-9_WGS84	Northing	940641.1693sft	Point R2915-9_Local	
Latitude	36°18'31.45715"N	Easting	1260499.6148sft	Northing	940641.1850sft
Longitude	81°30'35.56934"W	Elevation	2893.9308sft	Easting	1260499.6170sft
Height	2790.8934sft	Horz error	0.016sft	Elevation	2893.9060sft
		Vert error	0.025sft	Utilized	Horz and Vert
		3D error	0.029sft	Quality	Survey quality
Point	R2915-10_WGS84	Northing	941223.4149sft	Point R2915-10_Local	
Latitude	36°18'37.24430"N	Easting	1260628.2994sft	Northing	941223.4310sft
Longitude	81°30'34.17760"W	Elevation	2992.8526sft	Easting	1260628.3040sft
Height	2889.8302sft	Horz error	0.017sft	Elevation	2992.8370sft
		Vert error	0.016sft	Utilized	Horz and Vert
		3D error	0.023sft	Quality	Survey quality
Point	R2915-11_WGS84	Northing	946476.2925sft	Point R2915-11_Local	
Latitude	36°19'28.64133"N	Easting	1258539.4421sft	Northing	946476.3110sft
Longitude	81°31'01.31448"W	Elevation	2961.5603sft	Easting	1258539.4520sft
Height	2858.7761sft	Horz error	0.021sft	Elevation	2961.5280sft
		Vert error	0.032sft	Utilized	Horz and Vert
		3D error	0.039sft	Quality	Survey quality
Point	R2915-12 WGS84	Northing	947042.3574sft	Point R2915-12 Local	
Latitude	36°19'34.13447"N	Easting	1258133.1858sft	Northing	947042.3510sft
Longitude	81°31'06.45218"W	Elevation	2976.4319sft	Easting	1258133.1700sft
Height	2873.6799sft	Horz error	0.017sft	Elevation	2976.4580sft
		Vert error	0.026sft	Utilized	Horz and Vert
		3D error	0.031sft	Quality	Survey quality
Point	R2915-13 WGS84	Northing	951569.5121sft	Point R2915-13 Local	
Latitude	36°20'18.04952"N	Easting	1254826.4800sft	Northing	951569.5120sft
Longitude	81°31'48.25253"W	Elevation	3052.2178sft	Easting	1254826.4650sft
Height	2949.7070sft	Horz error	0.015sft	Elevation	3052.2240sft
		Vert error	0.006sft	Utilized	Horz and Vert
		3D error	0.016sft	Quality	Survey quality
Point	R2915-14_WGS84	Northing	952360.7067sft	Point R2915-14_Local	
Latitude	36°20'25.72331"N	Easting	1254245.9924sft	Northing	952360.7080sft

DATUM DESCRIPTION

THE LOCALIZED COORDINATE SYSTEM DEVELOPED FOR THIS PROJECT IS BASED ON THE STATE PLANE COORDINATES ESTABLISHED BY NCDOT FOR MONUMENT "R2915-15"
WITH NAD 83/CORS STATE PLANE GRID COORDINATES OF
NORTHING: 954880.7810(ft) EASTING: 1254012.2870(ft)
ELEVATION: 3097.5210(ft)
THE AVERAGE COMBINED GRID FACTOR USED ON THIS PROJECT (GROUND TO GRID) IS: 0.99991292
THE N.C. LAMBERT GRID BEARING AND LOCALIZED HORIZONTAL GROUND DISTANCE FROM "R2915-15" TO -L- STATION 158+31.70 IS
S 16°58'47" E 28327.5827
ALL LINEAR DIMENSIONS ARE LOCALIZED HORIZONTAL DISTANCES
VERTICAL DATUM USED IS NAVD 88

NOTE: DRAWING NOT TO SCALE

NOTES:

1. *THE SITE CALIBRATION SHOWN IS BASED UPON A NETWORK TIED TO THE HARN (HIGH ACCURACY REFERENCE NETWORK) NAD 83/95 ADJUSTMENT. THIS CALIBRATION WILL ALLOW THE END USER TO WORK WITHIN THE SAME COORDINATE SYSTEM WHEN USING RTK (REAL TIME KINEMATIC) GPS AND A LOCAL BASE STATION. IF ANOTHER SYSTEM SUCH AS VRS (VIRTUAL REFERENCE STATION) IS USED, ADDITIONAL FIELD TIES MAY BE NEEDED TO REDUCE POSSIBLE ERRORS, OR BIASES.*

2. *THE CONTROL DATA FOR THIS PROJECT CAN BE FOUND ELECTRONICALLY BY SELECTING PROJECT CONTROL DATA AT:*
HTTPS://CONNECT.NCDOT.GOV/RESOURCES/LOCATION/

   THE FILES TO BE FOUND ARE AS FOLLOWS:
   R2915B_LS_GPSCALIB.HTML
   R2915B_LS_WGS84.TXT
   R2915B_LS_LOCAL.TXT
   R2915B_LS_CONTROL.TXT

   THE WGS84 AND LOCAL FILES ARE COMMA DELIMITED AND CAN BE USED TO REPRODUCE THE SITE CALIBRATION FOR THE END USER'S GPS EQUIPMENT. IF FURTHER INFORMATION IS NEEDED, PLEASE CONTACT THE LOCATION AND SURVEYS UNIT.

© INDICATES GEODETIC CONTROL MONUMENTS USED OR SET FOR HORIZONTAL PROJECT CONTROL BY THE NCDOT LOCATION AND SURVEYS UNIT.
PROJECT CONTROL ESTABLISHED USING GLOBAL POSITIONING SYSTEM.
SEE GPS CALIBRATION SHEET FOR HORIZONTAL AND VERTICAL COORDINATE VALUES.

6/26/2015 8:08:12 AM ...\FinalSurvey\R2915B_LS_1C-2.dgn USER: TILLMAN

PROJECT REFERENCE NO.	SHEET NO.
R-2915B	1C-3
Location and Surveys	

SURVEY CONTROL SHEET R-2915B

Longitude	81°31'55.59073"W	Elevation	3078.5171sft	Easting	1254245.9770sft
Height	2976.0465sft	Horz error	0.015sft	Elevation	3078.5190sft
		Vert error	0.002sft	Utilized	Horz and Vert
		3D error	0.016sft	Quality	Survey quality

Point	R2915-15 WGS84	Northing	954880.7882sft	Point R2915-15 Local	
Latitude	36°20'50.57260"N	Easting	1254012.3126sft	Northing	954880.7810sft
Longitude	81°31'59.23136"W	Elevation	3097.5370sft	Easting	1254012.2870sft
Height	2995.1423sft	Horz error	0.027sft	Elevation	3097.5210sft
		Vert error	0.016sft	Utilized	Horz and Vert
		3D error	0.031sft	Quality	Survey quality

Point	R2915-16_WGS84	Northing	955689.2599sft	Point R2915-16_Local	
Latitude	36°20'58.40190"N	Easting	1253372.2604sft	Northing	955689.2700sft
Longitude	81°32'07.30385"W	Elevation	3139.7336sft	Easting	1253372.2370sft
Height	3037.3781sft	Horz error	0.025sft	Elevation	3139.6930sft
		Vert error	0.041sft	Utilized	Horz and Vert
		3D error	0.048sft	Quality	Survey quality

Point	R2915-17_WGS84	Northing	960732.3214sft	Point R2915-17_Local	
Latitude	36°21'50.14423"N	Easting	1260924.8880sft	Northing	960732.3040sft
Longitude	81°30'36.58112"W	Elevation	3355.9956sft	Easting	1260924.8760sft
Height	3253.5217sft	Horz error	0.021sft	Elevation	3356.0160sft
		Vert error	0.020sft	Utilized	Horz and Vert
		3D error	0.029sft	Quality	Survey quality

Point	R2915-18_WGS84	Northing	959689.5169sft	Point R2915-18_Local	
Latitude	36°21'39.95242"N	Easting	1261385.6028sft	Northing	959689.4970sft
Longitude	81°30'30.62882"W	Elevation	3396.5313sft	Easting	1261385.5910sft
Height	3294.0193sft	Horz error	0.023sft	Elevation	3396.5580sft
		Vert error	0.027sft	Utilized	Horz and Vert
		3D error	0.035sft	Quality	Survey quality

Point	R2915-19_WGS84	Northing	967060.7220sft	Point R2915-19_Local	
Latitude	36°22'54.39872"N	Easting	1267779.1405sft	Northing	967060.7040sft
Longitude	81°29'14.75578"W	Elevation	3005.2191sft	Easting	1267779.1370sft
Height	2902.6651sft	Horz error	0.018sft	Elevation	3005.2590sft
		Vert error	0.040sft	Utilized	Horz and Vert
		3D error	0.044sft	Quality	Survey quality

Point	R2915-20 WGS84	Northing	966821.8373sft	Point R2915-20 Local	
Latitude	36°22'52.19547"N	Easting	1268416.6439sft	Northing	966821.8150sft
Longitude	81°29'06.89021"W	Elevation	3001.8897sft	Easting	1268416.6390sft
Height	2899.3121sft	Horz error	0.023sft	Elevation	3001.9300sft
		Vert error	0.040sft	Utilized	Horz and Vert
		3D error	0.046sft	Quality	Survey quality

Point	R2915-21 WGS84	Northing	972084.6876sft	Point R2915-21 Local	
Latitude	36°23'44.52005"N	Easting	1269660.6108sft	Northing	972084.6700sft
Longitude	81°28'53.29316"W	Elevation	3132.4940sft	Easting	1269660.6140sft
Height	3029.9808sft	Horz error	0.018sft	Elevation	3132.5390sft
		Vert error	0.045sft	Utilized	Horz and Vert
		3D error	0.048sft	Quality	Survey quality

Point	R2915-22_WGS84	Northing	973156.5253sft	Point R2915-22_Local	
Latitude	36°23'55.25041"N	Easting	1270213.4941sft	Northing	973156.5140sft
Longitude	81°28'46.86125"W	Elevation	3163.2767sft	Easting	1270213.5010sft
Height	3060.7659sft	Horz error	0.013sft	Elevation	3163.3260sft
		Vert error	0.049sft	Utilized	Horz and Vert
		3D error	0.051sft	Quality	Survey quality

Point	R2915-23 WGS84	Northing	981712.8608sft	Point R2915-23 Local	
Latitude	36°25'21.32188"N	Easting	1276325.1593sft	Northing	981712.8790sft
Longitude	81°27'34.73217"W	Elevation	2903.7232sft	Easting	1276325.1910sft
Height	2801.1821sft	Horz error	0.037sft	Elevation	2903.6430sft
		Vert error	0.080sft	Utilized	Horz and Vert
		3D error	0.088sft	Quality	Survey quality

Point	R2915-24_WGS84	Northing	980994.0668sft	Point R2915-24_Local	
Latitude	36°25'14.17430"N	Easting	1276148.6155sft	Northing	980994.0780sft
Longitude	81°27'36.67335"W	Elevation	2878.9461sft	Easting	1276148.6390sft
Height	2776.3983sft	Horz error	0.026sft	Elevation	2878.8920sft
		Vert error	0.054sft	Utilized	Horz and Vert
		3D error	0.060sft	Quality	Survey quality

DATUM DESCRIPTION

THE LOCALIZED COORDINATE SYSTEM DEVELOPED FOR THIS PROJECT IS BASED ON THE STATE PLANE COORDINATES ESTABLISHED BY NCDOT FOR MONUMENT "R2915-15"
WITH NAD 83/CORS STATE PLANE GRID COORDINATES OF
NORTHING: 954880.7810(ft) EASTING: 1254012.2870(ft)
ELEVATION: 3097.5210(ft)
THE AVERAGE COMBINED GRID FACTOR USED ON THIS PROJECT (GROUND TO GRID) IS: 0.99991292
THE N.C. LAMBERT GRID BEARING AND LOCALIZED HORIZONTAL GROUND DISTANCE FROM "R2915-15" TO -L- STATION 158+31.70 IS
S 16°58'47" E 28327.5827
ALL LINEAR DIMENSIONS ARE LOCALIZED HORIZONTAL DISTANCES
VERTICAL DATUM USED IS NAVD 88

NOTE: DRAWING NOT TO SCALE

NOTES:

1. THE SITE CALIBRATION SHOWN IS BASED UPON A NETWORK TIED TO THE HARN (HIGH ACCURACY REFERENCE NETWORK) NAD 83/95 ADJUSTMENT. THIS CALIBRATION WILL ALLOW THE END USER TO WORK WITHIN THE SAME COORDINATE SYSTEM WHEN USING RTK (REAL TIME KINEMATIC) GPS AND A LOCAL BASE STATION. IF ANOTHER SYSTEM SUCH AS VRS (VIRTUAL REFERENCE STATION) IS USED, ADDITIONAL FIELD TIES MAY BE NEEDED TO REDUCE POSSIBLE ERRORS, OR BIASES.

2. THE CONTROL DATA FOR THIS PROJECT CAN BE FOUND ELECTRONICALLY BY SELECTING PROJECT CONTROL DATA AT:
HTTPS://CONNECT.NCDOT.GOV/RESOURCES/LOCATION/

THE FILES TO BE FOUND ARE AS FOLLOWS:
R2915B_LS_GPSCALIB.HTML
R2915B_LS_WGS84.TXT
R2915B_LS_LOCAL.TXT
R2915B_LS_CONTROL.TXT

THE WGS84 AND LOCAL FILES ARE COMMA DELIMITED AND CAN BE USED TO REPRODUCE THE SITE CALIBRATION FOR THE END USER'S GPS EQUIPMENT. IF FURTHER INFORMATION IS NEEDED, PLEASE CONTACT THE LOCATION AND SURVEYS UNIT.

© INDICATES GEODETIC CONTROL MONUMENTS USED OR SET FOR HORIZONTAL PROJECT CONTROL BY THE NCDOT LOCATION AND SURVEYS UNIT.
PROJECT CONTROL ESTABLISHED USING GLOBAL POSITIONING SYSTEM.
SEE GPS CALIBRATION SHEET FOR HORIZONTAL AND VERTICAL COORDINATE VALUES.

6/26/2015 8:08:24 AM
USER: TIMWAY
R2915B_Ls_1C-3.dgn

PROJECT REFERENCE NO.	SHEET NO.
R-2915B	1C-4
Location and Surveys	

SURVEY CONTROL SHEET R-2915B

ROW MARKER IRON PIN AND CAP-E

ALIGN	STATION	OFFSET	NORTH	EAST
L	158-50.63	-86.41	927802.7786	1262197.7964
L	158-31.70	100.00	927791.5343	1262384.8326
L	158-31.70	-85.00	927785.0970	1262199.9446
L	160-55.00	110.00	928026.0117	1262371.5786
L	160-90.00	120.00	928062.8721	1262376.1772
L	161-55.70	100.00	928125.2615	1262346.1907
L	162-63.70	100.00	928233.9398	1262329.3461
L	163-11.54	-90.00	928249.8659	1262134.1332
L	165-69.70	-100.00	928519.0351	1262097.4713
L	165-69.70	100.00	928521.4887	1262297.4562
L	166-59.74	-100.00	928617.4958	1262100.4461
L	166-59.74	100.00	928602.9734	1262299.9181
L	168-10.00	207.00	928722.1313	1262423.6114
L	168-10.00	100.00	928741.2480	1262318.3330
L	168-46.00	235.00	928748.9670	1262457.2061
L	169-36.00	263.00	928826.2745	1262502.0931
L	169-65.74	-100.00	928933.1313	1262153.9212
L	170-30.00	236.00	928924.6147	1262498.0173
L	170-75.00	125.00	928993.7718	1262396.9881
L	172-71.74	-100.00	929220.2277	1262203.2335
L	172-75.00	157.00	929205.2965	1262459.8209
L	178-39.62	-100.00	929718.7551	1262104.6703
L	179-90.29	262.19	930035.4642	1262339.6956
L	179-94.00	-105.00	929840.2150	1262028.6958
L	179-94.00	-130.00	929826.6829	1262007.6747
L	180-18.04	278.47	930070.3375	1262336.4370
L	181-52.00	280.00	930187.6008	1262258.2075
L	181-60.00	296.00	930203.3016	1262266.7798
L	182-08.00	-100.00	930016.7057	1261914.2150
L	182-08.00	-130.00	929999.5837	1261889.5810
L	182-15.00	300.00	930250.7470	1262338.6740
L	183-90.73	-100.00	930166.7541	1261809.9233
L	185-93.00	-162.00	930297.9796	1261643.2874
L	186-68.00	-100.00	930396.7578	1261651.2124
L	186-68.00	130.00	930523.8691	1261842.8963
L	188-33.00	318.00	930743.2332	1261929.3922
L	188-47.00	338.00	930761.6594	1261942.2756
L	188-47.14	100.00	930651.7900	1261731.1530
L	188-47.14	-100.00	930559.3864	1261553.7789
L	189-85.00	385.00	930868.9118	1261945.4455
L	189-98.00	118.00	930784.3985	1261691.9694
L	190-90.00	339.00	930923.9833	1261878.6192
L	192-05.00	240.00	930986.3627	1261762.3893
L	192-50.00	100.00	931001.5995	1261617.9796
L	192-50.00	-100.00	930972.5958	1261420.0938
L	193-55.82	-96.55	931086.7844	1261411.9203
L	193-70.00	304.00	931120.4244	1261811.2587
L	196-07.00	288.00	931299.4365	1261804.7461
L	196-40.00	335.00	931315.8525	1261855.1176
L	196-97.00	333.00	931356.5924	1261861.4285
L	198-29.70	-88.42	931587.7703	1261490.2025
L	199-00.00	100.00	931585.8147	1261691.1010
L	200-60.03	100.00	931717.1273	1261756.3304
L	201-25.00	-210.00	931936.1062	1261527.0837
L	201-66.03	100.00	931802.0504	1261809.7373
L	205-90.00	-337.00	932411.7176	1261716.6378
L	207-36.00	-285.00	932497.7991	1261857.6355
L	207-58.00	-100.00	932392.7240	1262011.6270
L	211-21.00	-100.00	932659.8750	1262269.8184
L	213-13.00	-304.00	932946.1193	1262281.9282
L	213-63.00	-295.00	932974.0967	1262328.4845
L	213-75.00	100.00	932679.9444	1262592.3971
L	214-14.00	-135.00	932885.6202	1262472.1683
L	214-30.00	158.00	932669.3199	1262670.4545
L	215-05.00	-125.00	932936.7274	1262551.4732
L	215-20.00	-100.00	932926.5865	1262579.0299
L	216-25.00	100.00	932831.2807	1262783.8102
L	217-38.86	100.00	932896.3709	1262873.8977
L	217-38.86	-100.00	933060.0563	1262758.9755
L	219-50.86	100.00	933013.8246	1263047.3405
L	219-50.86	-100.00	933180.3580	1262936.5856
L	221-34.86	100.00	933115.7191	1263200.5512
L	221-34.86	-100.00	933282.2524	1263089.7963
L	223-68.86	-100.00	933412.2337	1263270.8044
L	223-68.86	95.00	933262.7468	1263396.0189
L	223-68.86	100.00	933258.9138	1263399.2295
L	225-36.48	-100.00	933518.4904	1263379.0049
L	230-67.92	95.00	933902.8438	1263783.0093
L	230-67.92	100.00	933901.7817	1263787.8952
L	233-01.92	100.00	934144.2456	1263822.3786
L	233-01.92	-100.00	934164.9397	1263623.4521
L	238-00.00	100.00	934639.6513	1263873.9151
L	242-03.79	100.00	935041.2781	1263915.6951
L	242-50.00	115.00	935085.6839	1263935.3964
L	242-50.00	100.00	935087.2359	1263920.4769
L	243-75.00	-115.00	935233.8111	1263719.5647
L	243-75.00	-100.00	935232.2591	1263734.4842
L	248-00.00	125.00	935631.6970	1264002.2515
L	248-00.00	-125.00	935657.5647	1263753.5934
L	249-55.00	-130.00	935812.2501	1263764.6581
L	250-00.00	150.00	935828.0368	1264047.8114
L	250-56.24	229.30	935875.7735	1264132.5048
L	250-85.00	-170.00	935945.6911	1263738.3240
L	251-30.00	-165.00	935989.9322	1263747.9533
L	251-31.13	257.45	935947.3432	1264168.2507

ROW MARKER IRON PIN AND CAP-E

ALIGN	STATION	OFFSET	NORTH	EAST
L	254-65.00	192.07	936022.6883	1264110.3591
L	254-65.00	-100.00	936052.9091	1263819.8555
L	255-15.00	-100.00	936102.6407	1263825.0290
L	255-70.00	-100.00	936157.3455	1263830.7199
L	255-97.85	270.00	936146.7621	1264201.6156
L	257-00.00	-140.00	936290.7865	1263804.3858
L	257-42.87	242.89	936293.8086	1264189.6568
L	257-81.04	273.27	936328.6274	1264223.8274
L	257-85.44	268.57	936333.4954	1264219.6040
L	258-00.78	176.30	936358.2939	1264129.4106
L	258-08.09	254.74	936357.4484	1264208.1929
L	258-27.99	-100.00	936413.9060	1263857.4096
L	258-82.92	247.54	936433.9532	1264208.7664
L	259-08.74	266.13	936458.9257	1264229.8609
L	259-14.39	-100.00	936498.8779	1263865.8701
L	259-50.41	242.99	936504.8452	1264210.7581
L	259-53.21	259.58	936506.4165	1264227.5438
L	261-00.00	230.96	936668.7228	1264208.3326
L	262-01.64	236.13	936785.0365	1264213.0430
L	262-25.75	-100.00	936795.0502	1263876.1253
L	262-43.97	240.76	936834.9955	1264215.0662
L	262-47.09	202.39	936835.9695	1264176.5433
L	263-00.00	-100.00	936863.4772	1263870.4912
L	263-10.94	194.32	936908.2658	1264161.6033
L	264-00.00	-135.00	936948.4836	1263822.4871
L	264-32.90	96.52	937025.7281	1264043.1191
L	265-53.43	23.74	937129.2197	1263940.9685
L	266-15.95	-135.00	937135.4636	1263771.4550

ROW MARKER IRON PIN AND CAP-E

ALIGN	STATION	OFFSET	NORTH	EAST
Y9	11-10.00	65.00	929355.9053	1262434.2530
Y9	12-58.00	170.00	929366.0960	1262634.0930
Y9	13-00.00	218.00	929429.9837	1262748.7521
Y9	13-35.00	130.00	929547.3719	1262695.5302
Y9	13-78.00	170.00	929656.7761	1262726.1435
Y9	15-07.00	190.00	929805.3895	1262681.7820
Y9	16-10.00	45.00	929837.2232	1262506.7945
Y9	16-90.08	45.00	929929.7547	1262472.8532
Y9	16-90.08	-30.69	929877.6752	1262404.3001

ROW MARKER IRON PIN AND CAP-E

ALIGN	STATION	OFFSET	NORTH	EAST
Y10	12-75.00	-30.00	931651.5864	1261218.6755
Y10	12-75.00	30.00	931591.5913	1261219.4372
Y10	13-11.82	30.00	931592.0588	1261256.2547
Y10	13-25.00	-40.00	931662.2205	1261268.5445
Y10	14-63.00	-48.00	931706.2160	1261364.7473
Y10	14-68.35	75.25	931616.9968	1261449.9599
Y10	14-76.59	81.62	931620.1573	1261462.6880
Y10	15-18.50	-123.00	931791.4458	1261342.2287
Y10	15-54.00	-132.00	931823.9447	1261359.1046
Y10	15-89.00	-85.00	931823.9028	1261423.2748

ROW MARKER IRON PIN AND CAP-E

ALIGN	STATION	OFFSET	NORTH	EAST
Y13	11-02.96	9.52	936466.1955	1263744.7372
Y13	11-02.96	8.48	936448.2785	1263743.0241
Y13	11-31.35	-30.74	936484.5894	1263775.0348
Y13	11-50.00	63.83	936388.6070	1263785.7126

ROW MARKER PERMANENT EASEMENT-E

ALIGN	STATION	OFFSET	NORTH	EAST
L	158-60.91	-86.41	927812.4186	1262197.2907
L	159-87.59	-87.00	927932.4990	1262184.6913
L	160-77.04	-153.81	928009.8366	1262107.3970
L	160-77.82	-137.82	928012.1719	1262123.0955
L	160-86.87	-109.02	928025.2421	1262150.2434
L	160-92.41	-154.51	928023.7460	1262104.4592
L	160-93.15	-138.52	928026.8814	1262120.1576
L	162-44.02	-90.59	928182.7723	1262144.1571
L	164-75.00	-91.49	928417.6911	1262111.2747
L	164-75.00	-148.00	928412.7366	1262054.9860
L	164-75.00	-97.71	928417.1458	1262105.0795
L	165-24.00	-148.00	928466.8708	1262051.1615
L	165-24.00	-94.89	928469.6405	1262104.1990
L	165-32.00	158.00	928489.7873	1262356.4044
L	165-32.00	102.76	928487.2669	1262301.2253
L	165-55.35	-98.17	928503.4092	1262094.5996
L	165-55.87	-108.57	928503.7179	1262088.1843
L	165-62.00	158.00	928515.6327	1262355.5561
L	165-69.50	-107.85	928518.7113	1262089.6286
L	168-06.44	-94.13	928772.2638	1262126.6669
L	170-63.12	-126.04	929032.1276	1262148.6069
L	170-90.50	-128.66	929058.3181	1262151.1944
L	171-23.00	-114.00	929085.8624	1262171.2991
L	171-23.00	-105.27	929084.3094	1262179.8879
L	171-29.56	-118.86	929092.8060	1262167.6070
L	171-34.97	-114.35	929097.0291	1262172.9250
L	171-45.68	-105.34	929105.4407	1262183.5175
L	171-77.50	-104.97	929134.8100	1262188.5620
L	171-77.50	-115.00	929136.2880	1262178.6412
L	172-29.96	-216.87	929195.0432	1262083.5795
L	172-49.24	-191.46	929208.3419	1262110.4709
L	182-50.00	-100.00	930051.1934	1261890.2442
L	182-50.00	-125.00	930036.9250	1261869.7158
L	182-90.00	-100.00	930084.0388	1261867.4149
L	182-90.00	-125.00	930069.7704	1261846.8865
L	186-16.85	149.47	930493.9628	1261886.5352
L	186-87.67	156.44	930553.9606	1261854.7483
L	198-56.23	162.84	931526.4657	1261735.2013
L	198-78.50	131.97	931555.7854	1261713.4148
L	200-62.10	110.62	931713.4037	1261766.4560
L	200-73.33	139.14	931707.6199	1261796.1628
L	200-77.47	100.43	931730.7446	1261764.8941
L	200-78.42	109.23	931726.9576	1261772.8820
L	202-47.98	106.09	931864.8914	1261859.5168
L	202-48.95	-36.07	931848.6471	1261884.7406
L	203-45.70	103.05	931944.4552	1261912.0420
L	203-45.70	100.00	931946.2454	1261909.5710
L	203-45.70	116.00	931936.8584	1261922.5280
L	204-56.60	115.00	932023.9487	1261986.1462
L	204-56.60	100.00	932033.8667	1261974.2356

ROW MARKER PERMANENT EASEMENT-E

ALIGN	STATION	OFFSET	NORTH	EAST
L	205-02.08	123.78	932053.5137	1262020.1349
L	205-96.40	100.00	932140.0300	1262058.9798
L	205-96.40	115.00	932130.5207	1262070.5804
L	206-98.00	115.00	932206.1786	1262134.1446
L	206-98.00	106.37	932211.8102	1262127.6039
L	206-98.00	100.00	932215.9658	1262122.7775
L	208-76.40	100.00	932345.4877	1262239.1757
L	208-76.40	128.00	932326.3339	1262259.5995
L	208-76.40	110.16	932338.5391	1262246.5851
L	209-71.20	128.00	932392.6604	1262323.2238
L	209-71.20	100.00	932412.2703	1262303.2375
L	209-71.20	109.17	932405.8500	1262309.7810
L	210-84.00	120.00	932475.4391	1262395.2972
L	210-84.00	105.27	932486.0344	1262385.0633
L	210-84.00	100.00	932489.8244	1262381.4025
L	211-54.98	131.36	932514.6149	1262453.0464
L	211-70.50	102.45	932546.0588	1262444.4056
L	211-70.50	120.00	932533.1899	1262456.3332
L	211-70.50	100.00	932547.8583	1262442.7378
L	213-87.30	113.17	932677.5428	1262610.0413
L	214-16.31	143.78	932671.9365	1262651.2307
L	214-78.95	144.42	932709.5455	1262698.6083
L	215-20.26	144.08	932734.5573	1262729.6956
L	215-32.86	155.08	932733.3567	1262746.0395
L	215-33.48	135.41	932749.2494	1262734.4369
L	215-43.27	143.94	932748.3164	1262747.1383
L	215-52.55	122.77	932770.5651	1262741.3157
L	217-22.00	100.00	932886.8889	1262860.4497
L	217-22.00	140.00	932854.2443	1262883.5654
L	217-75.00	100.45	932916.1967	1262903.1742
L	217-75.00	140.00	932883.6526	1262925.6428
L	218-06.62	-99.34	933098.8154	1262816.1985
L	220-63.27	-100.00	933242.6084	1263030.1868
L	220-71.36	-130.83	933272.7629	1263019.8572
L	222-38.00	96.80	933177.2817	1263285.9674
L	222-38.00	112.00	933164.8084	1263294.6544
L	222-88.00	96.59	933207.9763	1263328.5553
L	222-88.00	112.00	933195.5600	1263337.6877
L	223-82.27	-117.50	933433.3676	1263268.6578
L	223-83.05	-147.50	933456.5537	1263249.6169
L	225-71.09	-120.71	933542.9277	1263398.6275
L	226-74.85	-109.04	933623.1649	1263447.2657
L	226-75.90	-122.03	933631.1136	1263436.9513
L	226-92.79	-120.82	933642.9949	1263446.1074
L	229-63.32	95.00	933792.8446	1263753.3495
L	229-68.43	119.23	933790.8065	1263778.1364
L	229-72.32	102.86	933794.8284	1263763.8200
L	229-81.44	123.09	933803.4968	1263786.1336
L	229-85.49	106.77	933812.5188	1263771.8173
L	231-24.50	97.04	933962.4422	1263796.5224
L	231-25.00	106.00	933961.4823	1263805.4462
L	231-80.00	96.56	934020.5985	1263804.7934
L	231-80.00	103.00	934019.7411	1263811.1720
L	232-53.01	98.22	934095.3188	1263815.4202
L	233-01.92	105.00	934143.7283	1263827.3518
L	234-47.79	100.00	934289.3291	1263837.4715
L	237-75.00	100.00	934614.7855	1263871.3284
L	237-75.00	103.00	934614.4751	1263874.3123
L	237-75.50	-100.00	934635.9769	1263672.4536
L	237-75.50	-107.00	934636.7012	1263665.4912
L	237-84.30	108.31	934623.1766	1263880.5584
L	237-85.01	125.00	934622.1505	1263897.3068
L	238-00.00	103.00	934639.3409	1263876.8990
L	238-00.00	124.44	934637.1225	1263898.2248
L	238-27.00	-107.00	934687.9248	1263670.8199
L	238-27.00	-107.00	934687.9248	1263670.8199
L	238-27.00	-100.00	934687.2005	1263677.7824
L	241-97.89	121.40	935033.1869	1263936.3665
L	243-73.29	126.78	935207.8913	1263959.8674
L	248-52.39	141.11	935682.1485	1264023.6943
L	248-52.60	156.42	935680.7673	1264038.9467
L	248-67.39	140.90	935697.0801	1264025.0394
L	248-67.60	156.21	935695.7069	1264040.2918
L	249-08.31	138.54	935738.0293	1264026.9255
L	251-70.80	-342.88	936048.9209	1263575.2455
L	254-64.68	-358.72	936078.5344	1263570.4452
L	255-01.47	-100.00	936089.1840	1263823.6292
L	255-26.60	-121.98	936116.4531	1263804.3661
L	256-29.09	-118.18	936217.9966	1263818.7506

ROW MARKER PERMANENT EASEMENT-E

ALIGN	STATION	OFFSET	NORTH	EAST
Y10	13-25.00	29.90	931592.3284	1261269.4319
Y10	13-25.00	70.00	931552.2293	1261269.9410
Y10	13-53.00	70.00	931555.3492	1261307.5811
Y10	13-53.00	31.04	931593.8518	1261301.6557

L

TYPE	STATION	NORTH	EAST
TS	154-72.88	927266.1820	1262211.7570
SC	157-96.88	927583.4815	1262276.2450
EQB	160-01.83	927788.0547	1262284.8931
EQA	158-31.70	927788.0547	1262284.8931
ST	161-55.70	928109.6646	1262247.4144
TS	162-63.70	928216.3429	1262230.5699
SC	165-69.70	928520.2619	1262197.4637
CS	166-59.74	928610.2346	1262200.1821
SRS	169-65.74	928911.6005	1262251.5758
SC	172-71.74	929212.9664	1262302.9696
CS	178-39.62	929763.4238	1262194.1393
ST	181-45.62	930022.5585	1262031.9296
TS	185-41.14	930347.3343	1261806.1929
SC	188-47.14	930605.5882	1261642.4660
CS	200-60.03	931767.4672	1261669.9250
SC	201-66.03	931857.2024	1261726.3211
CS	217-38.86	932978.2136	1262816.4366
ST	219-50.86	933097.0913	1262991.9631
TS	221-34.86	933198.9858	1263145.1737
SC	223-68.86	933335.5738	1263335.0170
CS	230-67.92	933923.0220	1263690.1770
ST	233-01.92	934154.5926	1263722.9154
EQB	251-72.02	936014.6509	1263916.4152
EQA	254-36.94	936014.6509	1263916.4152
TS	258-05.75	936381.4828	1263954.5763
SC	262-25.75	936800.4714	1263975.9782
CS	276-16.91	937913.8118	1263250.9483
ST	279-46.91	938038.5344	1262945.6691

DR1

TYPE	STATION	NORTH	EAST
POT	10-00.00	928302.0676	1262217.3733
PC	10-53.29	928309.8429	1262270.0947
PRC	10-88.19	928301.7091	1262303.1397
PT	11-61.45	928269.1650	1262368.3957
PC	12-79.58	928234.6945	1262481.3800
PT	13-49.50	928245.9425	1262547.8795
PC	14-35.40	928296.6363	1262617.2271
PT	14-98.10	928337.4453	1262664.7427
POT	15-43.04	928369.3053	1262696.4382

DR2

TYPE	STATION	NORTH	EAST
POT	10-00.00	928650.3237	1262203.8336
PC	11-21.48	928637.2106	1262324.6028
PRC	11-93.20	928605.6215	1262387.2899
PT	14-59.21	928519.9091	1262628.2613
POT	15-06.93	928526.6574	1262675.4919

Y9

TYPE	STATION	NORTH	EAST
POT	10-00.00	929396.0578	1262300.4421
PC	10-55.24	929401.5885	1262355.4081
PT	11-49.53	929435.2432	1262442.2635
PC	12-55.49	929498.4447	1262527.3185
PT	13-92.44	929621.0952	1262558.2489
POT	16-90.08	929890.6819	1262432.0950

DR3

TYPE	STATION	NORTH	EAST
POT	10-00.00	930572.1206	1261660.5509
PC	10-54.16	930598.5573	1261707.8228
PRC	12-02.77	930727.0835	1261750.1093
PCC	19-08.88	931417.2500	1261687.7973
PT	19-85.75	931477.8670	1261731.9392
POT	19-95.47	931483.0083	1261740.1935

DR3B

TYPE	STATION	NORTH	EAST
POT	10-00.00	930643.2870	1261749.5088
PC	10-81.99	930608.4022	1261823.7044
PT	11-31.74	930590.0846	1261869.9260
POT	12-57.84	930551.0004	1261989.8206

Y10

TYPE	STATION	NORTH	EAST
POT	10-00.00	931618.0975	1260944.0785
PC	13-25.00	931622.2237	1261269.0523
PT	14-91.13	931689.2167	1261415.8899
PC	15-75.47	931752.2054	1261471.9691
PT	17-43.86	931796.6509	1261625.3491
POT	17-98.86	931781.4903	1261678.2178

Y11

TYPE	STATION	NORTH	EAST
POT	10-00.00	933458.5547	1263007.3951
POT	13-02.04	933259.3703	1263234.4500

Y12

TYPE	STATION	NORTH	EAST
POT	10-00.00	934235.0398	1263342.8902
PC	10-54.19	934189.0465	1263371.5426
PT	11-16.81	934137.0148	1263406.3750
PC	12-10.92	934060.5684	1263461.2644
PT	13-03.44	933982.5404	1263510.8720
PC	13-43.19	933947.8461	1263530.2737
PT	14-29.50	933884.4853	1263587.7826
POT	15-24.25	933830.4625	1263665.6316

DET

TYPE	STATION	NORTH	EAST
TS	251-72.02	936014.6509	1263916.4152
SC	253-31.02	936172.8807	1263932.0284
CS	254-66.15	936307.6398	1263942.0517
SRS	256-16.15	936457.4453	1263949.6577
SC	257-45.15	936586.2830	1263956.1087
CS	259-16.51	936757.1403	1263969.0785
ST	259-97.51	936837.7490	1263977.0280
POT	261-05.51	936945.1986	1263987.9175

Y13

TYPE	STATION	NORTH	EAST
POT	10-00.00	936466.6254	1263641.3380
PC	11-44.29	936452.7370	1263784.9616
PT	11-70.50	936451.3564	1263811.1223
POT	13-08.70	936450.1058	1263949.3218

Y13A

TYPE	STATION	NORTH	EAST
POT	10-00.00	936452.2436	1263949.4197
PC	11-03.28	936455.3971	1264052.6482
PT	11-89.88	936459.6765	1264139.1443
POT	12-79.80	936465.8155	1264228.8491

DATUM DESCRIPTION

THE LOCALIZED COORDINATE SYSTEM DEVELOPED FOR THIS PROJECT IS BASED ON THE STATE PLANE COORDINATES ESTABLISHED BY NCDOT FOR MONUMENT "R2915-15"
WITH NAD 83/CORS STATE PLANE GRID COORDINATES OF
NORTHING: 954880.7810(ft) EASTING: 1254012.2870(ft)
ELEVATION: 3097.5210(ft)
THE AVERAGE COMBINED GRID FACTOR USED ON THIS PROJECT (GROUND TO GRID) IS: 0.99991292
THE N.C. LAMBERT GRID BEARING AND LOCALIZED HORIZONTAL GROUND DISTANCE FROM "R2915-15" TO -L- STATION 158+31.70 IS
S 16°58'47" E 28327.5827
ALL LINEAR DIMENSIONS ARE LOCALIZED HORIZONTAL DISTANCES
VERTICAL DATUM USED IS NAVD 88

NOTES:

1. *THE SITE CALIBRATION SHOWN IS BASED UPON A NETWORK TIED TO THE HARN (HIGH ACCURACY REFERENCE NETWORK) NAD 8395 ADJUSTMENT. THIS CALIBRATION WILL ALLOW THE END USER TO WORK WITHIN THE SAME COORDINATE SYSTEM WHEN USING RTK (REAL TIME KINEMATIC) GPS AND A LOCAL BASE STATION. IF ANOTHER SYSTEM SUCH AS VRS (VIRTUAL REFERENCE STATION) IS USED, ADDITIONAL FIELD TIES MAY BE NEEDED TO REDUCE POSSIBLE ERRORS, OR BIASES.*

2. *THE CONTROL DATA FOR THIS PROJECT CAN BE FOUND ELECTRONICALLY BY SELECTING PROJECT CONTROL DATA AT:*
HTTP://WWW.NCDOT.ORG/DOH/PRECONSTRUCT/HIGHWAY/LOCATION/PROJECT/

THE FILES TO BE FOUND ARE AS FOLLOWS:
R2915B_LS_GPSCALIB.HTML
R2915B_LS_WGS84.TXT
R2915B_LS_LOCAL.TXT
R2915B_LS_CONTROL.TXT

THE WGS84 AND LOCAL FILES ARE COMMA DELIMITED AND CAN BE USED TO REPRODUCE THE SITE CALIBRATION FOR THE END USER'S GPS EQUIPMENT. IF FURTHER INFORMATION IS NEEDED, PLEASE CONTACT THE LOCATION AND SURVEYS UNIT.

© *INDICATES GEODETIC CONTROL MONUMENTS USED OR SET FOR HORIZONTAL PROJECT CONTROL BY THE NCDOT LOCATION AND SURVEYS UNIT.*
PROJECT CONTROL ESTABLISHED USING GLOBAL POSITIONING SYSTEM.
NETWORK ESTABLISHED FROM EXISTING HARN MONUMENTATION
SEE GPS CALIBRATION SHEET FOR HORIZONTAL AND VERTICAL COORDINATE VALUES.

FINAL TABLES

6/2/99
15-JUL-2015 10:10
R:\Roadway\Proj\2915b_ls_lc-4.dgn
$$$$USERNAME$$$$

PAVEMENT SCHEDULE (FINAL)

ITEM	DESCRIPTION	ITEM	DESCRIPTION	ITEM	DESCRIPTION
C1	PROPOSED APPROXIMATE 3.0 IN. ASPHALT SURFACE COURSE, TYPE S9.5B, AT AN AVERAGE RATE OF 168 LBS/SY IN EACH OF TWO LAYERS.	D2	PROP. VAR. DEPTH ASPHALT INT. COURSE, TYPE I19.0B, AT AN AVERAGE RATE OF 114 LBS/SY/IN. IN LIFTS NOT LESS THAN 2.5 IN. NOR GREATER THAN 4.0 IN. (MAX TOTAL LAYER=4.0 IN.)	J3	8" AGGREGATE BASE COURSE
C2	PROP. VAR. DEPTH ASPHALT CONC. SURFACE COURSE, TYPE S9.5B, AT AN AVERAGE RATE OF 112 LBS/SY/IN. IN LIFTS NOT LESS THAN 1.5 IN. NOR GREATER THAN 2.0 IN.	E1	PROP. APPROX. 4.0 IN. ASPHALT BASE COURSE, TYPE B25.0B, AT AN AVERAGE RATE OF 456 LBS/SY.	K	BASE TO BE TREATED WITH LIME TO A DEPTH OF 8", AT A RATE OF 20LBS/SY OR CEMENT TO A DEPTH OF 7" AT A RATE OF 55LBS/SY AS DIRECTED BY THE ENGINEER.
C3	PROPOSED APPROXIMATE 2.5 IN. ASPHALT SURFACE COURSE, TYPE SF9.5A, AT AN AVERAGE RATE OF 137.5 LBS/SY IN EACH OF TWO LIFTS. LIFTS NOT LESS THAN 1.0 IN. NOR GREATER THAN 1.5 IN.	E2	PROP. APPROX. 5.0 IN. ASPHALT BASE COURSE, TYPE B25.0B, AT AN AVERAGE RATE OF 570 LBS/SY.	N	GEOTEXTILE FOR PAVEMENT STABILIZATION
C4	PROP. VAR. DEPTH ASPHALT CONC. SURFACE COURSE, TYPE SF9.5A, AT AN AVERAGE RATE OF 110 LBS/SY/IN. IN LIFTS NOT LESS THAN 1.0 IN. NOR GREATER THAN 1.5 IN.	E3	PROP. APPROX. 5.5 IN. ASPHALT BASE COURSE, TYPE B25.0B, AT AN AVERAGE RATE OF 627 LBS/SY.	P	PRIME COAT AT THE RATE OF 0.5 GAL. PER SQ YARD
C5	PROPOSED APPROXIMATE 1.5 IN. ASPHALT SURFACE COURSE, TYPE S9.5B, AT AN AVERAGE RATE OF 168 LBS/SY/IN.	E4	PROP. VAR. DEPTH ASPHALT BASE COURSE, TYPE B25.0B, AT AN AVERAGE RATE OF 114 LBS/SY/IN IN LIFTS NOT LESS THAN 3 IN. NOR GREATER THAN 5.5 IN.	R1	2'-9" CURB & GUTTER
C6	PROPOSED APPROXIMATE 1.25 IN. ASPHALT SURFACE COURSE, TYPE SF9.5A, AT AN AVERAGE RATE OF 137.50 LBS/SY/IN.	J1	10" AGGREGATE BASE COURSE	R2	5" MONOLITHIC CONCRETE ISLAND (KEYED IN)
D1	PROP. APPROX. 4.0 IN. ASPHALT INT. COURSE, TYPE I19.0B, AT AN AVERAGE RATE OF 456 LBS/SY	J2	VARIABLE DEPTH AGGREGATE BASE COURSE	T	EARTH MATERIAL

ITEM	DESCRIPTION
U	EXISTING PAVEMENT
W1	WEDGING (SEE WEDGE DETAIL BELOW)
W2	WEDGING (SEE WEDGE DETAIL BELOW)

NOTES :
PAVEMENT EDGES ARE 1:1 UNLESS OTHERWISE NOTED.

PROJECT REFERENCE NO.	SHEET NO.
R-2915B	2A-1

ROADWAY DESIGN ENGINEER
NORTH CAROLINA PROFESSIONAL SEAL 14160 ENGINEER DOUGLAS B. SAUNDERS
7/17/2015
DocuSigned by: Douglas B. Saunders, PE
A0995F1995A147E...

PAVEMENT DESIGN ENGINEER
NORTH CAROLINA PROFESSIONAL SEAL 031484 ENGINEER VLADIMIR G. MITCHEV
7/14/2015
DocuSigned by: Vladimir G. Mitchev
A0995F1995A147E...

CDM Smith
Cama Dressler & McKee
5400 Glenwood Avenue
Suite 300
Raleigh, NC 27612-3228
NC COA No. F-0412

NC DEPARTMENT OF TRANSPORTATION
PAVEMENT MANAGEMENT UNIT
1593 MAIL SERVICE CENTER
RALEIGH, NC 27699-1593

INSET A

–L– (US 221)

MD = MACHINE DIRECTION

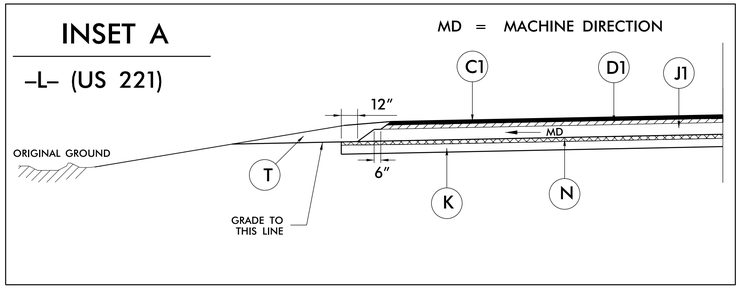

USE GEOTEXTILE FOR PAVEMENT STABILIZATION DETAIL WITH GRADED SHOULDER SECTION (INSET A) AS FOLLOWS:
(THESE LOCATIONS TO BE INVESTIGATED DURING CONSTRUCTION)

–L– STA. 160+50.00 TO STA. 161+50.00 RT
–L– STA. 235+50.00 TO STA. 241+50.00 RT

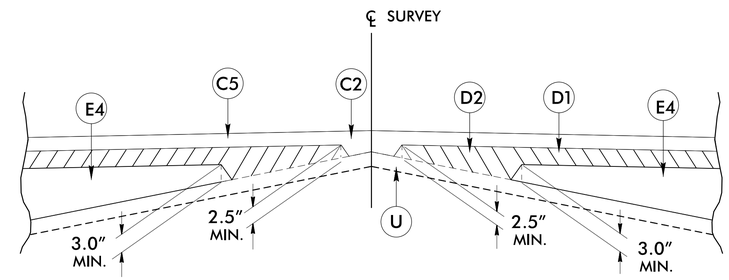

Detail Showing Method of Wedging #1

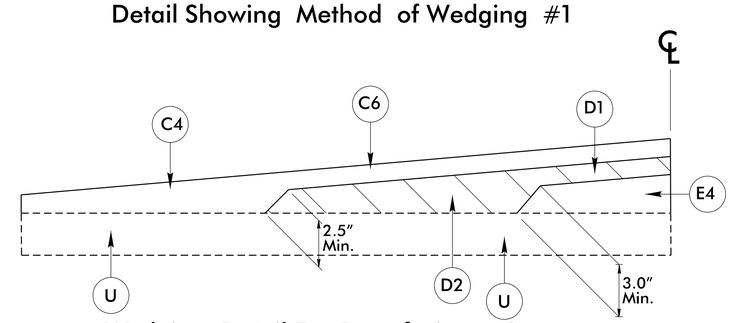

Wedging Detail For Resurfacing #2

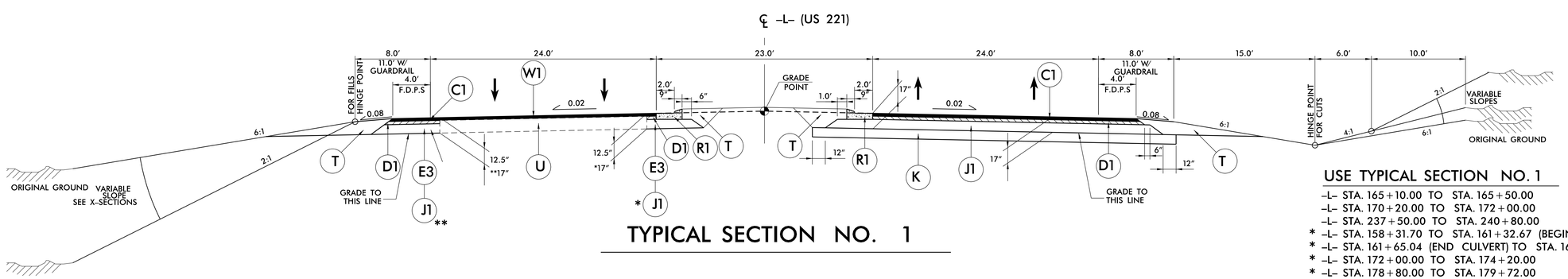

TYPICAL SECTION NO. 1

USE TYPICAL SECTION NO. 1

–L– STA. 165+10.00 TO STA. 165+50.00
–L– STA. 170+20.00 TO STA. 172+00.00
–L– STA. 237+50.00 TO STA. 240+80.00
* –L– STA. 158+31.70 TO STA. 161+32.67 (BEGIN CULVERT)
* –L– STA. 161+65.04 (END CULVERT) TO STA. 165+10.00
* –L– STA. 172+00.00 TO STA. 174+20.00
* –L– STA. 178+80.00 TO STA. 179+72.00
* –L– STA. 186+33.90 TO STA. 189+36.50
** –L– STA. 165+50.00 TO STA. 167+50.00
** –L– STA. 203+80.00 TO STA. 207+61.50
** –L– STA. 240+80.00 TO STA. 241+33.23 (BEG. BRIDGE)

NOTE: SEE INSET A FOR GEOTEXTILE FOR PAVEMENT STABILIZATION DETAIL

REVISIONS

6/26/2015 12:05:10 PM
R:\Roadway\Proj\2915B_PMP_2A-1.DGN
USER: cjhill MANP: 1 TYP: 2A-1.DGN

6/2/99

PROJECT REFERENCE NO.	SHEET NO.
R-2915B	2A-2

ROADWAY DESIGN ENGINEER
7/17/2015 SEAL 14160 DOUGLAS B. SAUNDERS ENGINEER
Douglas B. Saunders, PE

PAVEMENT DESIGN ENGINEER
7/14/2015 SEAL 031484 VLADIMIR GLUMITCHEV ENGINEER
Vladimir Glumitchev

CDM Smith
Camp Dresser & McKee
5400 Glenwood Avenue
Suite 300
Raleigh, NC 27612-3228
NC COA No. F-0412

NC DEPARTMENT OF TRANSPORTATION
PAVEMENT MANAGEMENT UNIT
1590 MAIL SERVICE CENTER
RALEIGH, NC 27699-1590

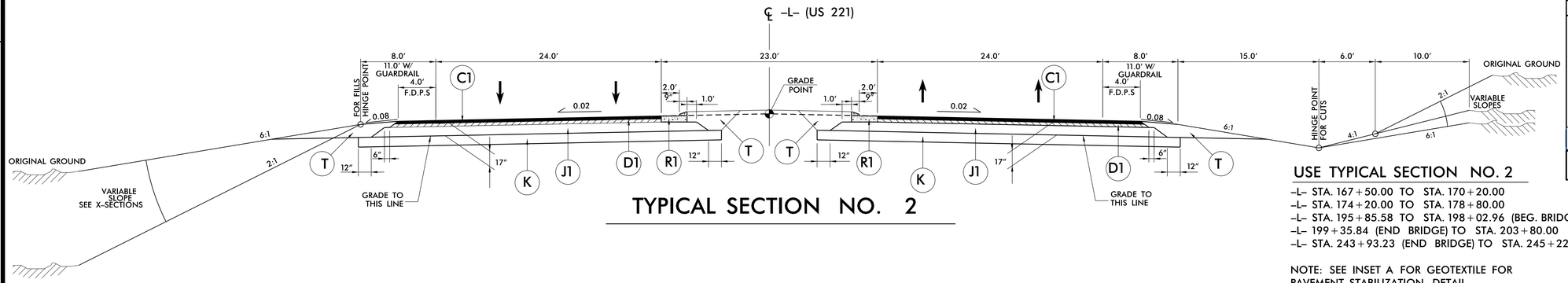

TYPICAL SECTION NO. 2

USE TYPICAL SECTION NO. 2

–L– STA. 167+50.00 TO STA. 170+20.00
–L– STA. 174+20.00 TO STA. 178+80.00
–L– STA. 195+85.58 TO STA. 198+02.96 (BEG. BRIDGE)
–L– 199+35.84 (END BRIDGE) TO STA. 203+80.00
–L– STA. 243+93.23 (END BRIDGE) TO STA. 245+22.48

NOTE: SEE INSET A FOR GEOTEXTILE FOR PAVEMENT STABILIZATION DETAIL

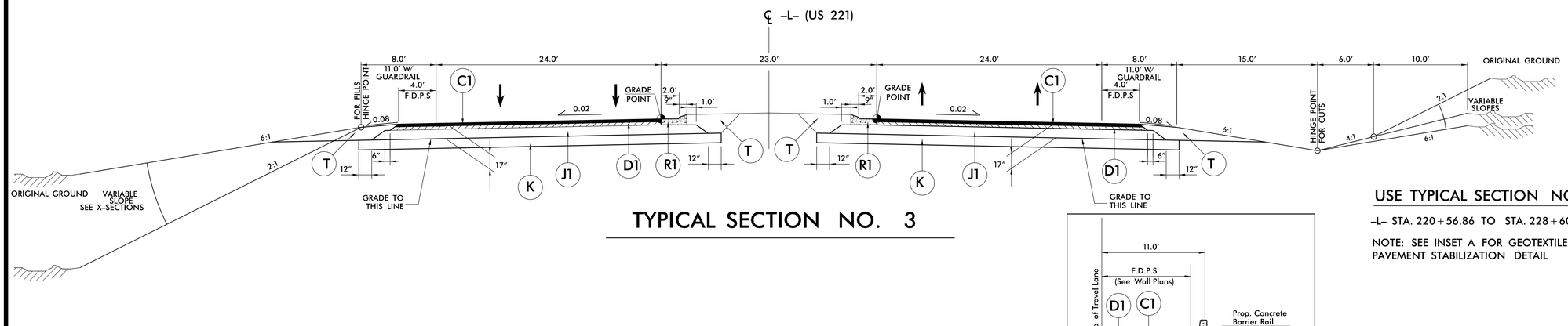

TYPICAL SECTION NO. 3

USE TYPICAL SECTION NO. 3

–L– STA. 220+56.86 TO STA. 228+60.00

NOTE: SEE INSET A FOR GEOTEXTILE FOR PAVEMENT STABILIZATION DETAIL

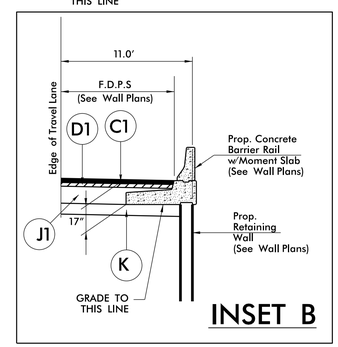

INSET B

USE INSET B WITH TYPICAL SECTION NO. 3

–L– STA. 220+56.86 TO STA. 221+63.00

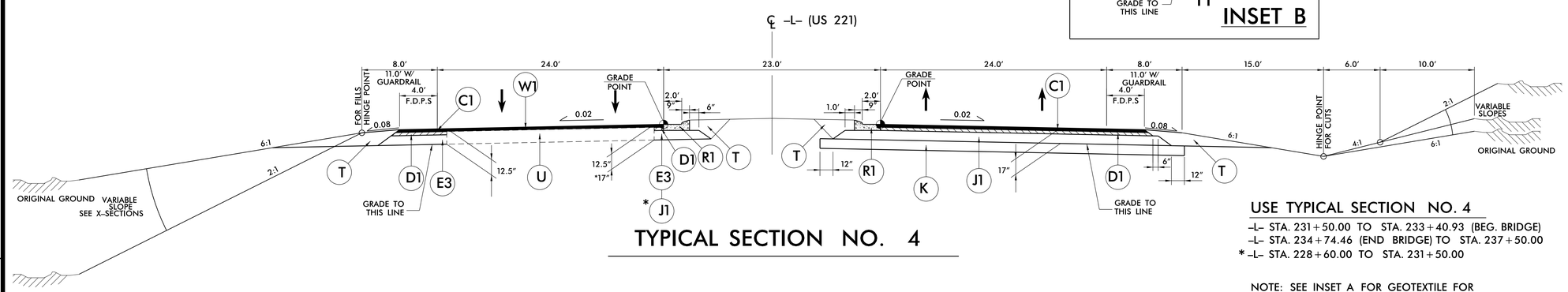

TYPICAL SECTION NO. 4

USE TYPICAL SECTION NO. 4

–L– STA. 231+50.00 TO STA. 233+40.93 (BEG. BRIDGE)
–L– STA. 234+74.46 (END BRIDGE) TO STA. 237+50.00
* –L– STA. 228+60.00 TO STA. 231+50.00

NOTE: SEE INSET A FOR GEOTEXTILE FOR PAVEMENT STABILIZATION DETAIL

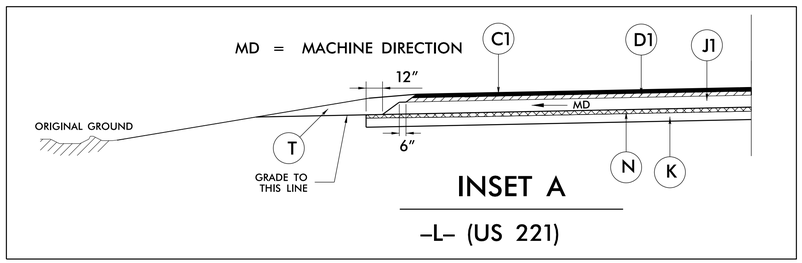

INSET A

–L– (US 221)

USE GEOTEXTILE FOR PAVEMENT STABILIZATION DETAIL WITH GRADED SHOULDER SECTION (INSET A) AS FOLLOWS:

(THESE LOCATIONS TO BE INVESTIGATED DURING CONSTRUCTION)

–L– STA. 197+50.00 TO STA. 198+50.00 RT
–L– STA. 228+00.00 TO STA. 234+00.00 RT
–L– STA. 235+50.00 TO STA. 241+50.00 RT
–L– STA. 244+00.00 TO STA. 249+50.00 RT

PAVEMENT SCHEDULE

C1	3″ S9.5B
C2	VAR. S9.5B
C3	2.5″ SF9.5A
C4	VAR. SF9.5A
C5	1.5″ S9.5B
C6	1.25″ SF9.5A
D1	4″ I19.0B
D2	VAR. I19.0B
E1	4″ B25.0B
E2	5″ B25.0B
E3	5.5″ B25.0B
E4	VAR. B25.0B
J1	10″ ABC
J2	VAR. ABC
J3	8″ ABC
K	STABILIZED SUB-GRADE
N	GEOTEXTILE FOR PAVEMENT STABILIZATION
P	PRIME COAT
R1	2′-9″ C&G
R2	5″ MONO. CONC. ISLAND
T	EARTH MATERIAL
U	EXISTING PAVEMENT
W1	WEDGING SEE SHEET 2A-1
W2	WEDGING SEE SHEET 2A-1

REVISIONS

REVISIONS

6/2/99

6/26/2015 12:05:46 PM
R:\Roadway\Proj\2915B_RDY_TYP_2A-2.DGN

PROJECT REFERENCE NO.	SHEET NO.
R-2915B	2A-3

ROADWAY DESIGN ENGINEER

NORTH CAROLINA PROFESSIONAL SEAL 14160 ENGINEER DOUGLAS B. SAUNDERS

7/17/2015

DocuSigned by: Douglas B. Saunders, PE

PAVEMENT DESIGN ENGINEER

NORTH CAROLINA PROFESSIONAL SEAL 031484 ENGINEER VLADIMIR G. MITCHEV

7/14/2015

DocuSigned by: Vladimir G. Mitchev

CDM Smith
Camp Dresser & McKee
5400 Glenwood Avenue
Suite 300
Raleigh, NC 27612-3228
NC COA No. F-0412

NC DEPARTMENT OF TRANSPORTATION
PAVEMENT MANAGEMENT UNIT
1590 MAIL SERVICE CENTER
RALEIGH, NC 27699-1590

REVISIONS

6/2/99

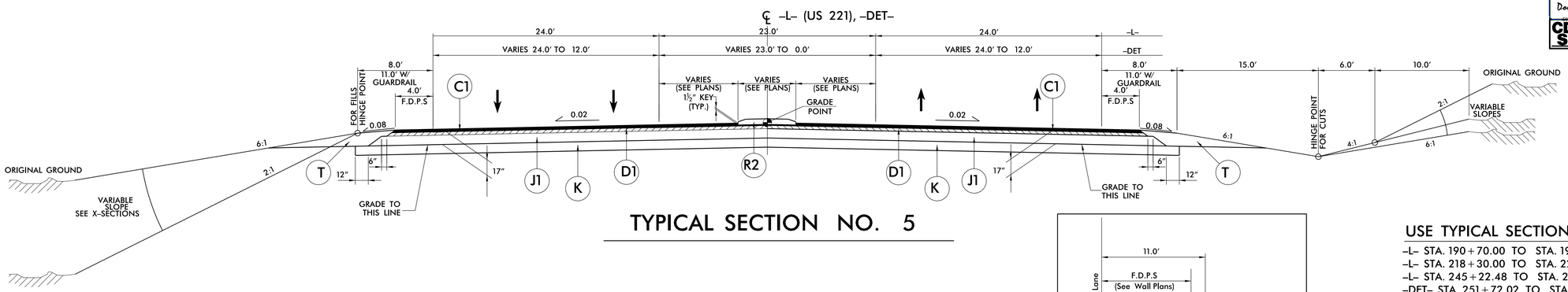

TYPICAL SECTION NO. 5

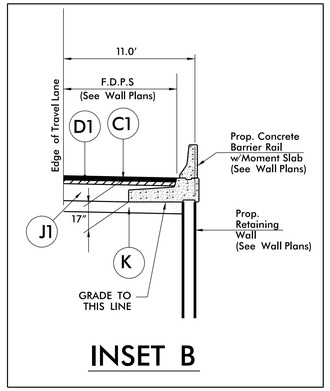

INSET B

USE TYPICAL SECTION NO. 5

–L– STA. 190+70.00 TO STA. 195+85.57
–L– STA. 218+30.00 TO STA. 220+56.86
–L– STA. 245+22.48 TO STA. 251+72.02
–DET– STA. 251+72.02 TO STA. 252+00.00

NOTE: SEE INSET A FOR GEOTEXTILE FOR PAVEMENT STABILIZATION DETAIL

USE INSET B WITH TYPICAL SECTION NO. 5

–L– STA. 219+22.00 TO STA. 220+56.86

PAVEMENT SCHEDULE	
C1	3″ S9.5B
C2	VAR. S9.5B
C3	2.5″ SF9.5A
C4	VAR. SF9.5A
C5	1.5″ S9.5B
C6	1.25″ SF9.5A
D1	4″ I19.0B
D2	VAR. I19.0B
E1	4″ B25.0B
E2	5″ B25.0B
E3	5.5″ B25.0B
E4	VAR. B25.0B
J1	10″ ABC
J2	VAR. ABC
J3	8″ ABC
K	STABILIZED SUB-GRADE
N	GEOTEXTILE FOR PAVEMENT STABILIZATION
P	PRIME COAT
R1	2′-9″ C&G
R2	5″ MONO. CONC. ISLAND
T	EARTH MATERIAL
U	EXISTING PAVEMENT
W1	WEDGING SEE SHEET 2A-1
W2	WEDGING SEE SHEET 2A-1

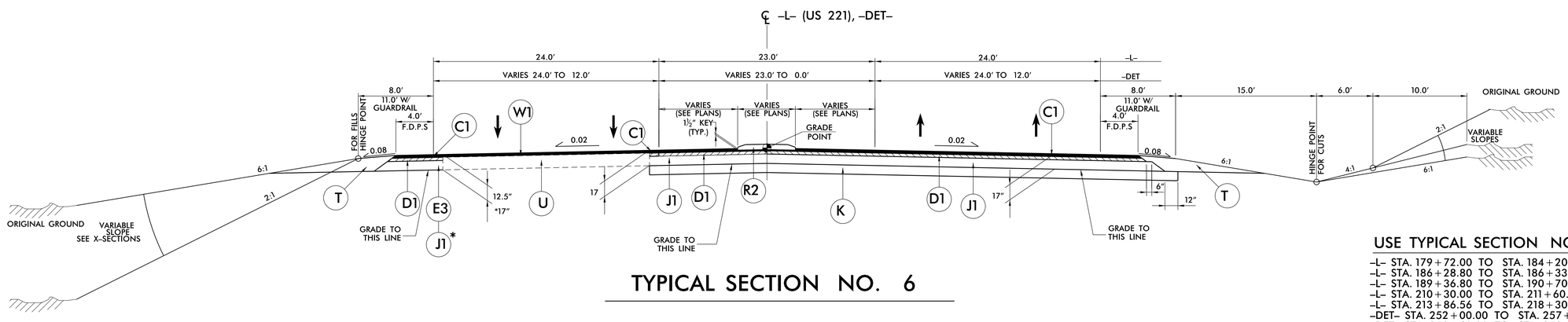

TYPICAL SECTION NO. 6

USE TYPICAL SECTION NO. 6

–L– STA. 179+72.00 TO STA. 184+20.00
–L– STA. 186+28.80 TO STA. 186+33.90
–L– STA. 189+36.80 TO STA. 190+70.00
–L– STA. 210+30.00 TO STA. 211+60.00
–L– STA. 213+86.56 TO STA. 218+30.00
–DET– STA. 252+00.00 TO STA. 257+50.00
–DET– STA. 258+60.00 TO STA. 259+00.00
* –L– STA. 184+20.00 TO STA. 186+28.80
* –L– STA. 207+61.50 TO STA. 210+30.00
* –L– STA. 211+60.00 TO STA. 213+86.56
* –DET– STA. 257+50.00 TO STA. 258+60.00

NOTE: SEE INSET A FOR GEOTEXTILE FOR PAVEMENT STABILIZATION DETAIL

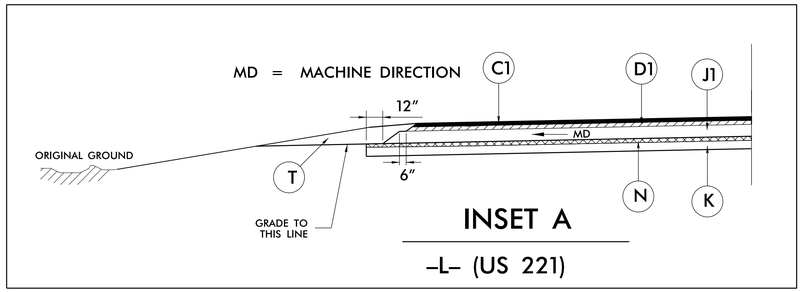

INSET A

–L– (US 221)

USE GEOTEXTILE FOR PAVEMENT STABILIZATION DETAIL WITH GRADED SHOULDER SECTION (INSET A) AS FOLLOWS:

(THESE LOCATIONS TO BE INVESTIGATED DURING CONSTRUCTION)

–L– STA. 185+00.00 TO STA. 186+25.00 LT
–L– STA. 244+00.00 TO STA. 249+50.00 RT
–L– STA. 249+50.00 TO STA. 251+50.00 CL

6/26/2015 2:10:55 PM
ITS-R-2915B_RDY_TYP_2A-3.DGN

PROJECT REFERENCE NO.	SHEET NO.
R-2915B	2A-4

ROADWAY DESIGN ENGINEER

NORTH CAROLINA PROFESSIONAL SEAL 14160 ENGINEER DOUGLAS B. SAUNDERS

7/17/2015

Douglas B. Saunders, PE

PAVEMENT DESIGN ENGINEER

NORTH CAROLINA PROFESSIONAL SEAL 031484 ENGINEER VLADIMIR G. MITCHEV

7/14/2015

Vladimir G. Mitchev

CDM Smith — Camp Dresser & McKee, 5400 Glenwood Avenue, Suite 300, Raleigh, NC 27612-3228, NC COA No. F-0412

NC DEPARTMENT OF TRANSPORTATION, PAVEMENT MANAGEMENT UNIT, 1593 MAIL SERVICE CENTER, RALEIGH, NC 27699-1593

REVISIONS

6/2/99

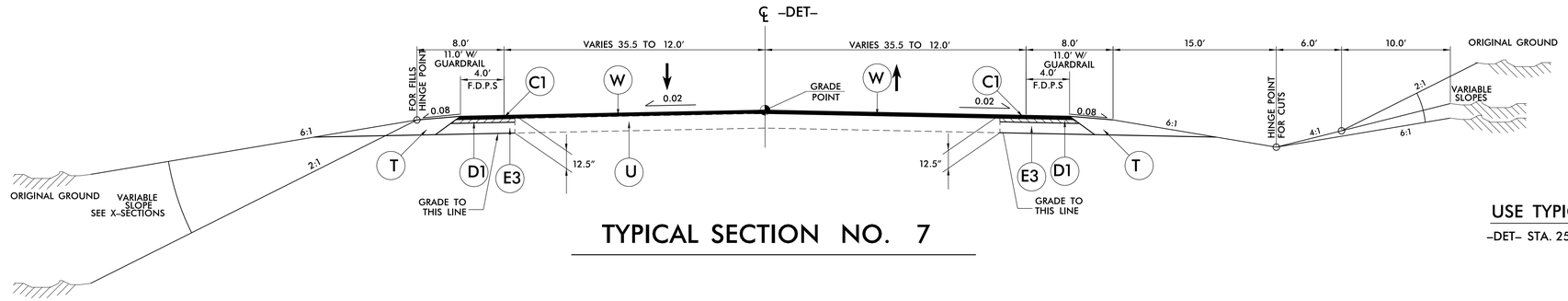

TYPICAL SECTION NO. 7

USE TYPICAL SECTION NO. 7

–DET– STA. 259+00.00 TO STA. 261+05.51

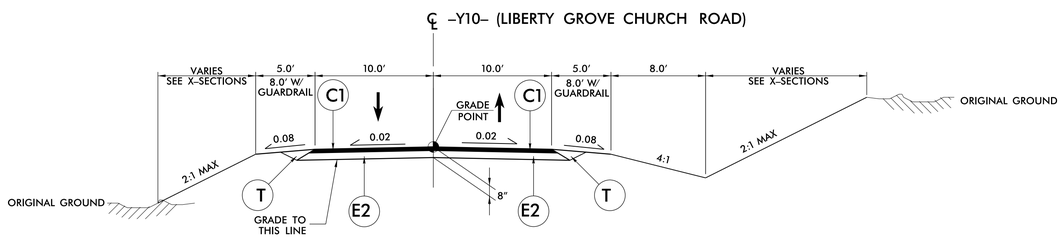

TYPICAL SECTION NO. 8

USE TYPICAL SECTION NO. 8

–Y10– STA. 12+75.00 TO STA. 17+62.15

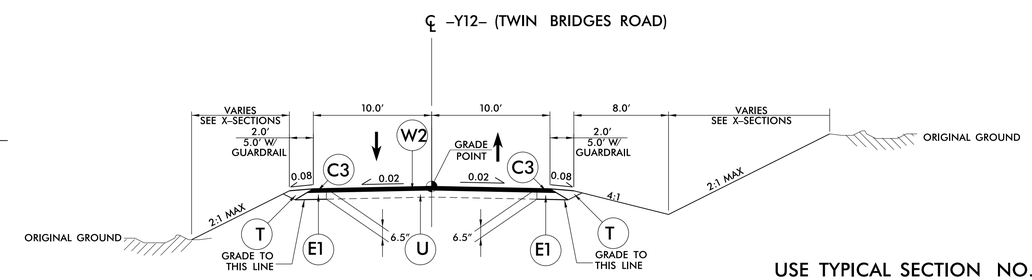

TYPICAL SECTION NO. 9

USE TYPICAL SECTION NO. 9

–Y12– STA. 12+85.00 TO STA. 13+70.00

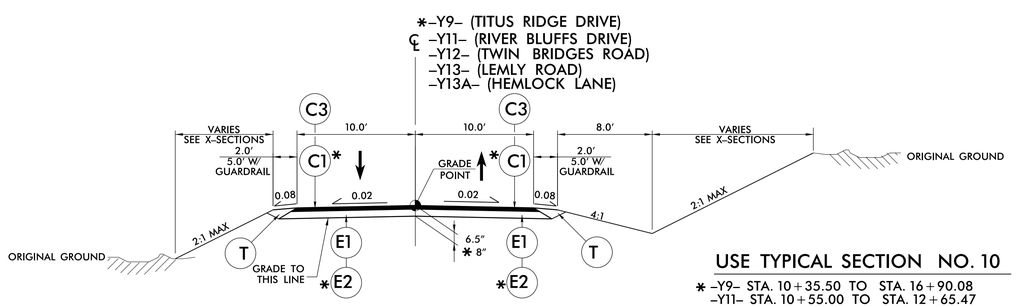

TYPICAL SECTION NO. 10

USE TYPICAL SECTION NO. 10

* –Y9– STA. 10+35.50 TO STA. 16+90.08
–Y11– STA. 10+55.00 TO STA. 12+65.47
–Y12– STA. 13+70.00 TO STA. 14+87.00
–Y13– STA. 11+50.00 TO STA. 12+86.60
–Y13A– STA. 10+21.98 TO STA. 12+77.00

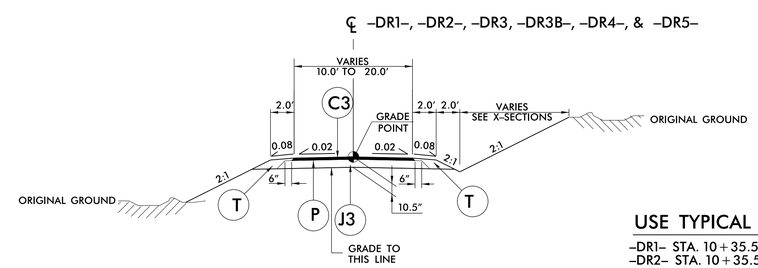

TYPICAL SECTION NO. 11

USE TYPICAL SECTION NO. 11

–DR1– STA. 10+35.50 TO STA. 15+43.00
–DR2– STA. 10+35.50 TO STA. 14+90.00
–DR3– STA. 10+35.50 TO STA. 19+95.00
–DR3B– STA. 10+06.00 TO STA. 12+35.00
–DR4– STA 10+35.50 TO STA. 13+24.54
–DR5– STA 10+09.64 TO STA. 11+56.37

PAVEMENT SCHEDULE

C1	3" S9.5B
C2	VAR. S9.5B
C3	2.5" SF9.5A
C4	VAR. SF9.5A
C5	1.5" S9.5B
C6	1.25" SF9.5A
D1	4" I19.0B
D2	VAR. I19.0B
E1	4" B25.0B
E2	5" B25.0B
E3	5.5" B25.0B
E4	VAR. B25.0B
J1	10" ABC
J2	VAR. ABC
J3	8" ABC
K	STABILIZED SUB-GRADE
N	GEOTEXTILE FOR PAVEMENT STABILIZATION
P	PRIME COAT
R1	2'-9" C&G
R2	5" MONO. CONC. ISLAND
T	EARTH MATERIAL
U	EXISTING PAVEMENT
W1	WEDGING SEE SHEET 2A-1
W2	WEDGING SEE SHEET 2A-1

6/26/2015 12:05:57 PM
R:\2915B\Roadway\Proj\R-2915B_TYP_2A-4.DGN
USER: TH | MAN: 1

PROJECT REFERENCE NO.	SHEET NO.
R-2915B	2A-5

ROADWAY DESIGN ENGINEER

NORTH CAROLINA PROFESSIONAL SEAL 14160 ENGINEER DOUGLAS B. SAUNDERS

7/17/2015

DocuSigned by: Douglas B. Saunders, PE

CDM Smith
Camp Dresser & McKee
5400 Glenwood Avenue
Suite 300
Raleigh, NC 27612-3228
NC COA No. F-0412

PAVEMENT DESIGN ENGINEER

NORTH CAROLINA PROFESSIONAL SEAL 031484 ENGINEER VLADIMIR G. MITCHEV

7/14/2015

DocuSigned by: Vladimir G. Mitchev

NC DEPARTMENT OF TRANSPORTATION
PAVEMENT MANAGEMENT UNIT
1590 MAIL SERVICE CENTER
RALEIGH, NC 27699-1590

PAVEMENT SCHEDULE

C1	3" S9.5B
C2	VAR. S9.5B
C3	2.5" SF9.5A
C4	VAR. SF9.5A
C5	1.5" S9.5B
C6	1.25" SF9.5A
D1	4" I19.0B
D2	VAR. I19.0B
E1	4" B25.0B
E2	5" B25.0B
E3	5.5" B25.0B
E4	VAR. B25.0B
J1	10" ABC
J2	VAR. ABC
J3	8" ABC
K	STABILIZED SUB-GRADE
N	GEOTEXTILE FOR PAVEMENT STABILIZATION
P	PRIME COAT
R1	2'-9" C&G
R2	5" MONO. CONC. ISLAND
T	EARTH MATERIAL
U	EXISTING PAVEMENT
W1	WEDGING SEE SHEET 2A-1
W2	WEDGING SEE SHEET 2A-1

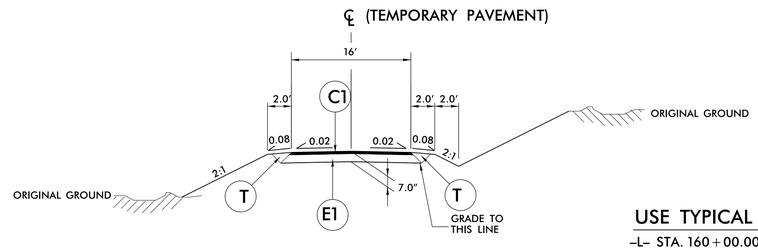

TYPICAL SECTION NO. 12

USE TYPICAL SECTION NO. 12

-L- STA. 160+00.00
-L- STA. 174+60.00
-L- STA. 210+00.0.0
-L- STA. 222+10.00
-L- STA 229+80.00

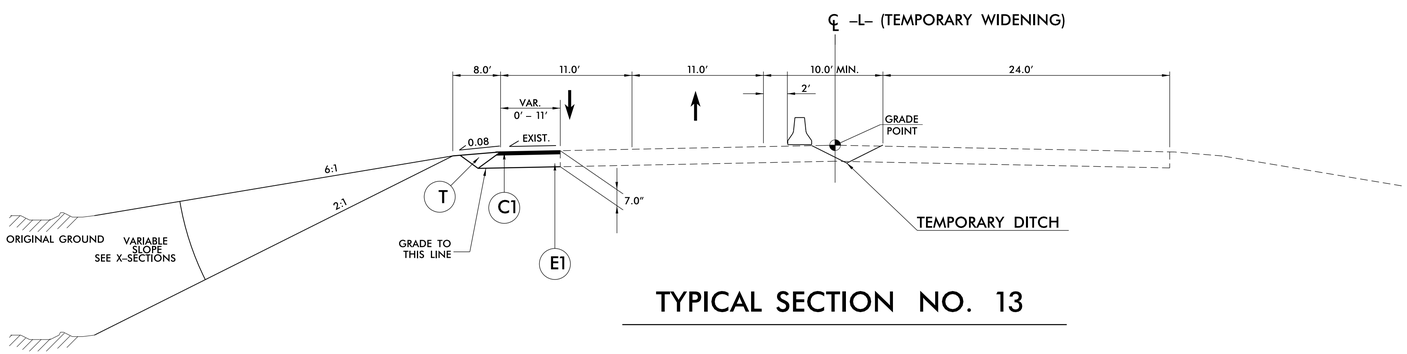

TYPICAL SECTION NO. 13

USE TYPICAL SECTION NO. 13

-L- STA. 166+25.00 TO STA. 171+00

REVISIONS

6/2/99

6/26/2015 2:06:02 PM
itsFrolin\R2915B_RDY_TYP_2A-5.dgn

PROJECT REFERENCE NO.	SHEET NO.
R-2915B	2B-1
R/W SHEET NO.	

ROADWAY DESIGN ENGINEER

7/17/2015

NORTH CAROLINA PROFESSIONAL SEAL 14160 ENGINEER DOUGLAS B. SAUNDERS

DocuSigned by:
Douglas B. Saunders, PE

CONSULTING ENGINEER
CDM Smith
Cam-Dresser & McKee
5400 Glenwood Avenue
Suite 300
Raleigh, NC 27612-3228
NC COA No. F-0412

SUNGATE DESIGN GROUP, P.A.
915 JONES FRANKLIN ROAD
RALEIGH, NORTH CAROLINA 27606
NC COA No. C-0890

U-TURN BULB DETAIL

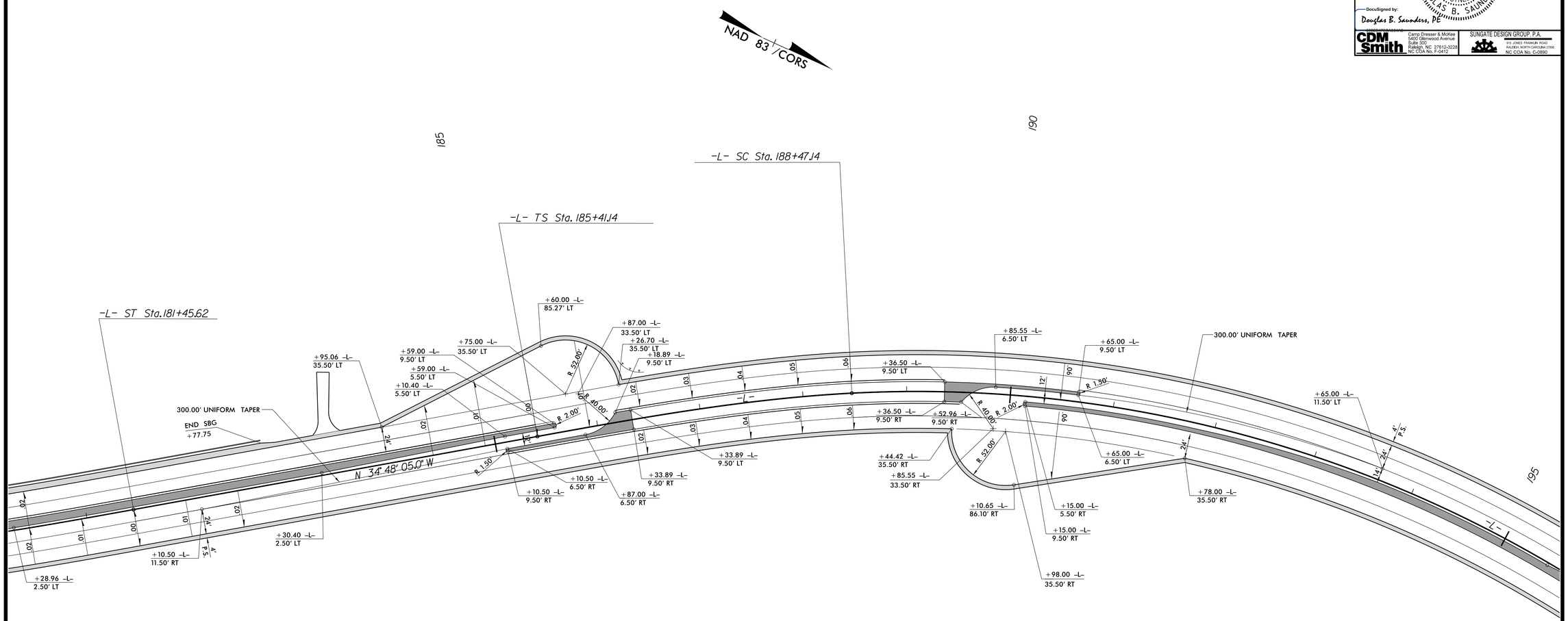

(ENGLISH)

REVISIONS

5/14/99

6/26/2015 8:09:01 AM
USER: TIM MAHAFFEY
ISFB_TIM_MAHAFFEY_Rdy_psh_2B-1.dgn

PROJECT REFERENCE NO.	SHEET NO.
R-2915B	2B-2
R/W SHEET NO.	

ROADWAY DESIGN ENGINEER

7/17/2015

NORTH CAROLINA PROFESSIONAL SEAL 14160 ENGINEER DOUGLAS B. SAUNDERS

DocuSigned by:
Douglas B. Saunders, PE

CDM Smith — Cam-Dresser & McKee, 5400 Glenwood Avenue, Suite 300, Raleigh, NC 27612-3228, NC COA No. F-0412

SUNGATE DESIGN GROUP, P.A., 915 JONES FRANKLIN ROAD, RALEIGH, NORTH CAROLINA 27606, NC COA No. C-0890

U-TURN BULB DETAIL

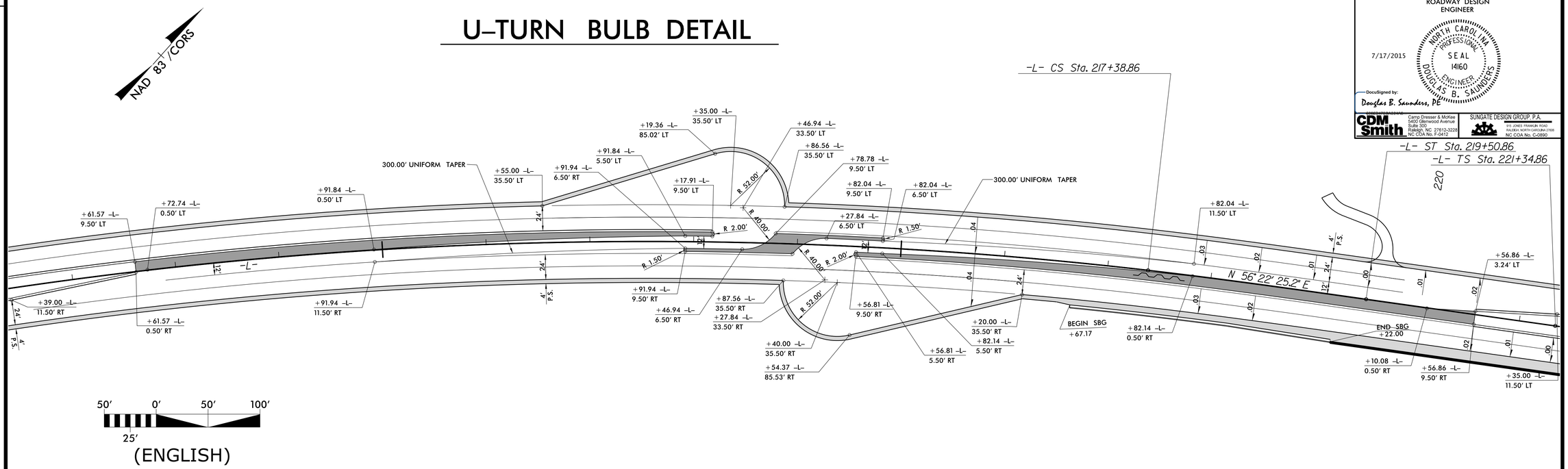

U-TURN BULB DETAIL

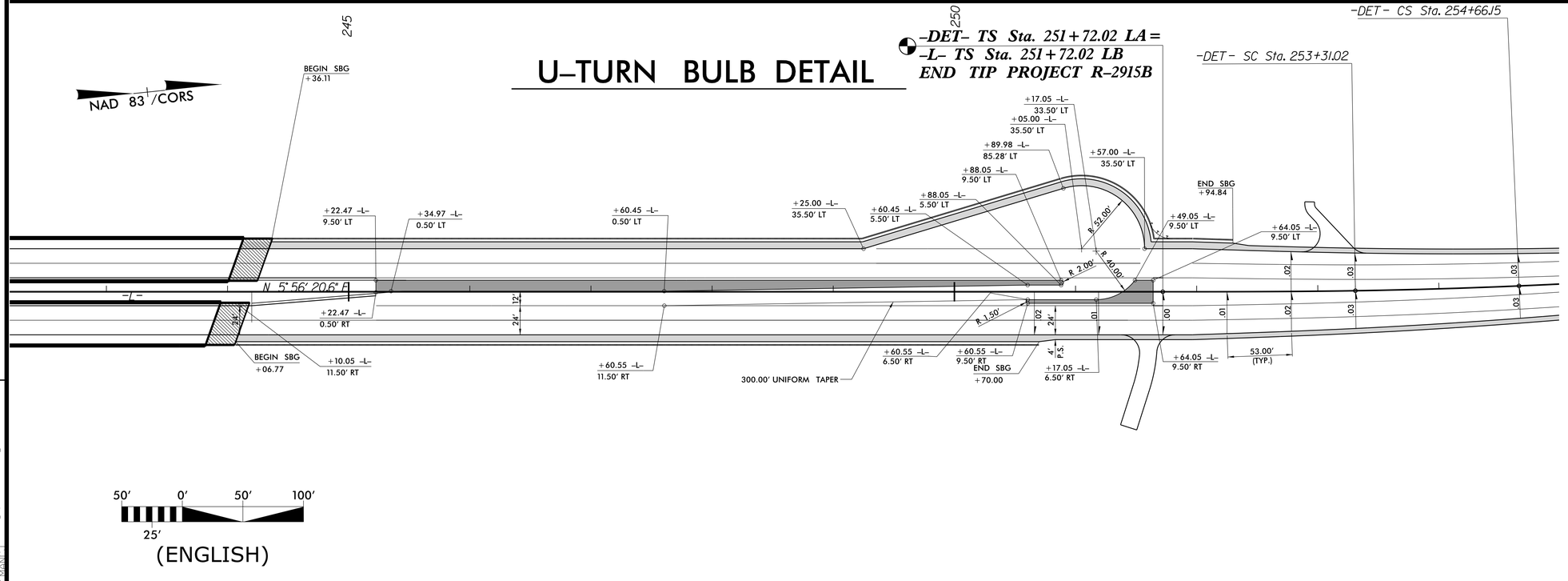

REVISIONS

5/14/99

6/26/2015 8:08:06 AM
Projects\R2915B_Rdy_psh_2B-2.dgn
USER: rtp MAP: 1

PROJECT REFERENCE NO.	SHEET NO.
R-2915B	2B-3
R/W SHEET NO.	

ROADWAY DESIGN ENGINEER: NORTH CAROLINA PROFESSIONAL SEAL 14160 ENGINEER — Douglas B. Summers, PE — 7/17/2015

HYDRAULICS ENGINEER: NORTH CAROLINA PROFESSIONAL SEAL 9334 ENGINEER — W. Henry Wells Jr. — 7/23/2015

CDM Smith — Camp Dresser & McKee, 5400 Glenwood Avenue, Suite 300, Raleigh, NC 27612-3228, NC COA No. F-0412

SUNGATE DESIGN GROUP, P.A. — 915 JONES FRANKLIN ROAD, RALEIGH, NORTH CAROLINA 27606, NC COA No. C-0890

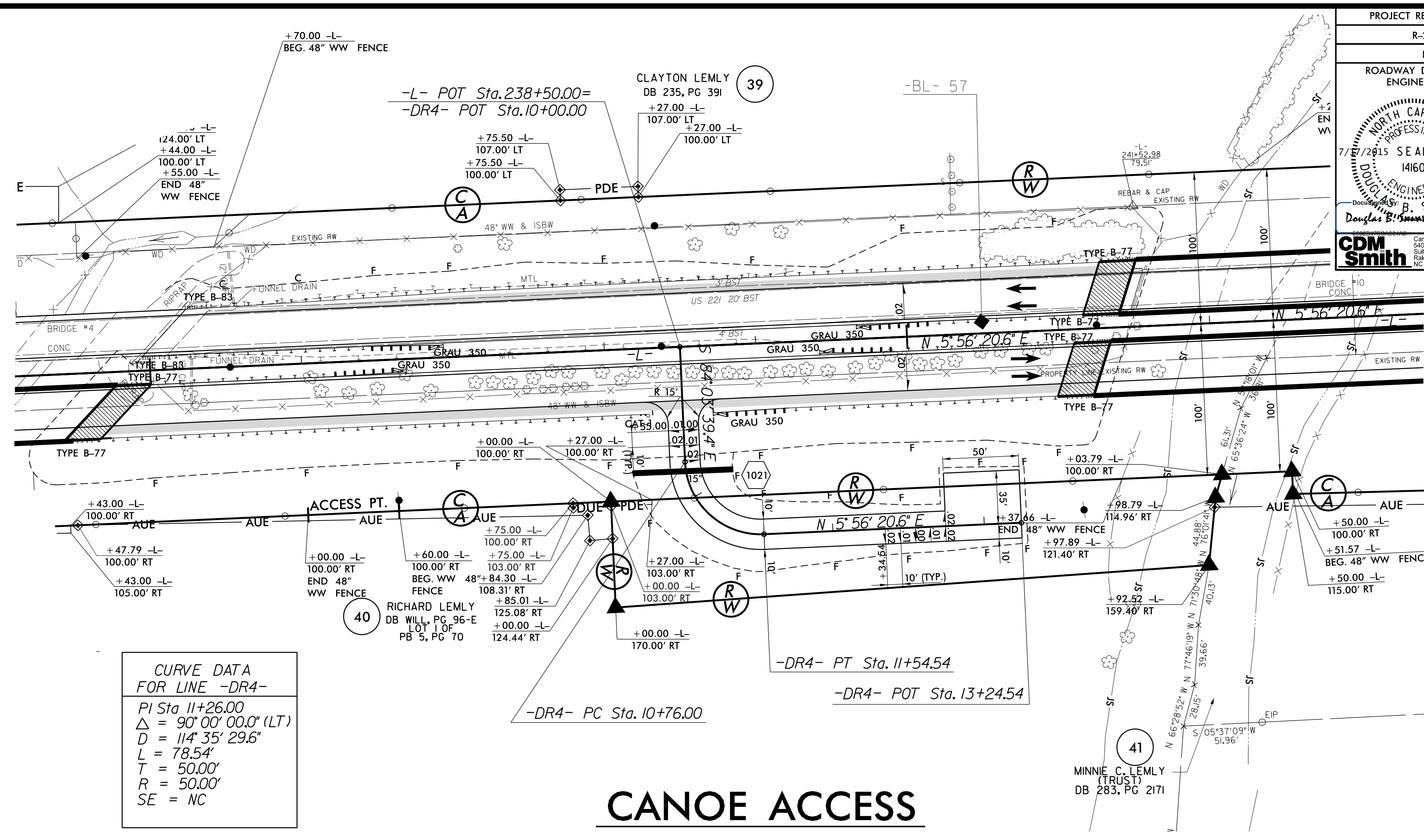

CURVE DATA
FOR LINE -DR4-

PI Sta 11+26.00
Δ = 90° 00' 00.0" (LT)
D = 114° 35' 29.6"
L = 78.54'
T = 50.00'
R = 50.00'
SE = NC

CANOE ACCESS

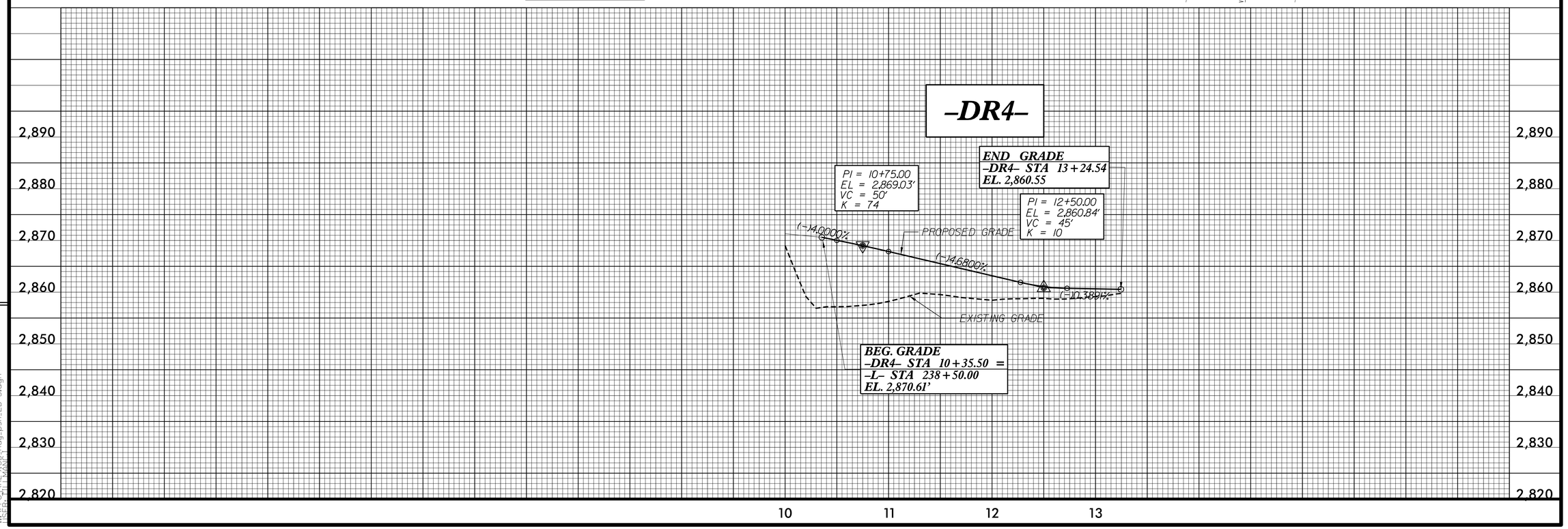

REVISIONS

REVISIONS

8/17/99

6/26/2015 8:09:13 AM
R:\Roadway\Proj\R2915B_2B-3.dgn
USER: THWELLS
MANIFOLD: roadway.psh, 2B-3.dgn

PROJECT REFERENCE NO.	SHEET NO.
R-2915B	2C-1

ENGLISH DETAIL DRAWING FOR
STRUCTURE ANCHOR UNIT
GUARDRAIL ANCHOR UNIT TYPE B-77
FOR F-SHAPE BARRIER
STATE OF NORTH CAROLINA DEPT. OF TRANSPORTATION DIVISION OF HIGHWAYS RALEIGH, N.C.
SHEET 5 OF 7 862D03

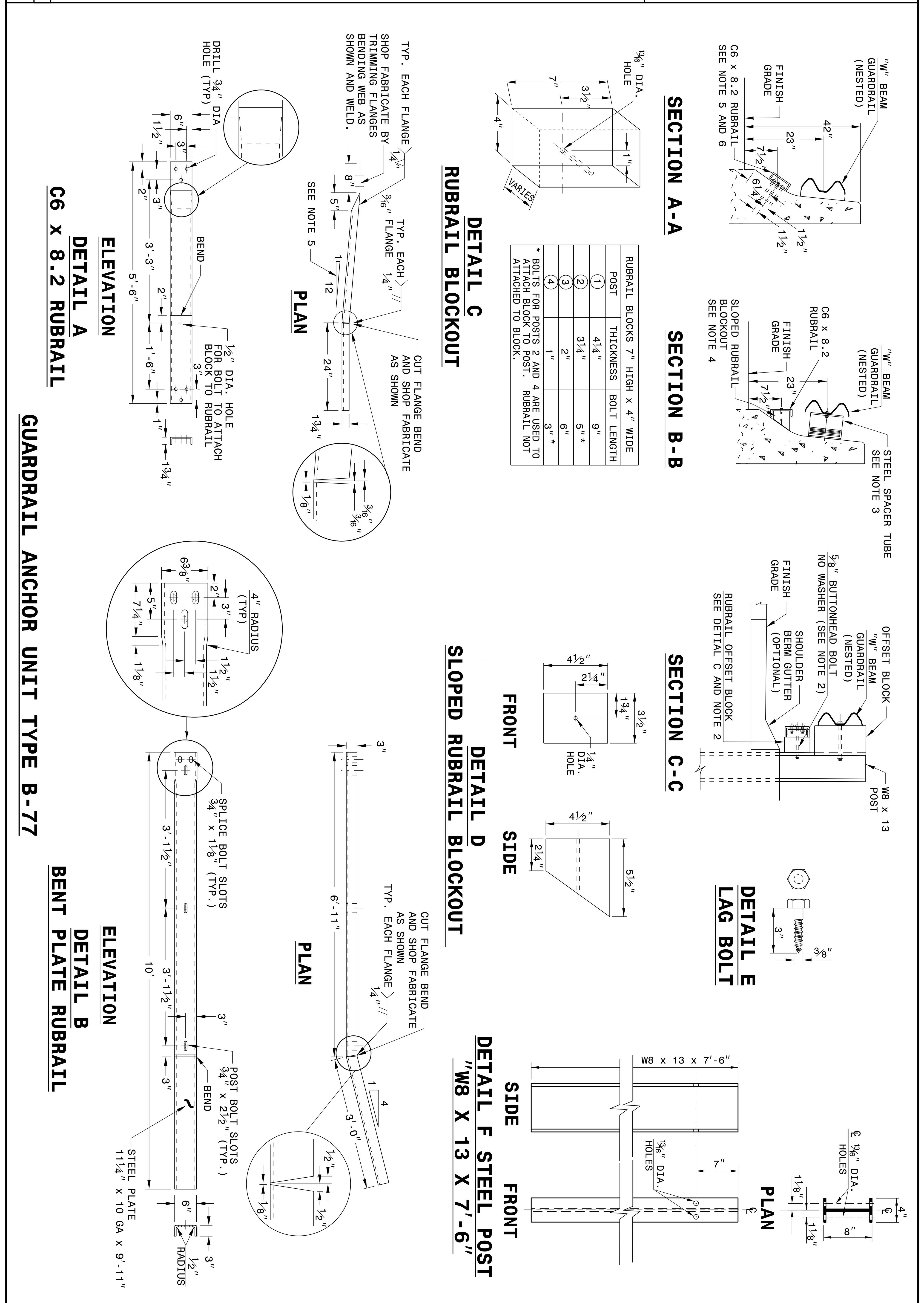

SHEET 5 OF 7 — 862D03

ENGLISH DETAIL DRAWING FOR
STRUCTURE ANCHOR UNIT
GUARDRAIL ANCHOR UNIT TYPE B-77
FOR F-SHAPE BARRIER

STATE OF
NORTH CAROLINA
DEPT. OF TRANSPORTATION
DIVISION OF HIGHWAYS
RALEIGH, N.C.

ENGLISH DETAIL DRAWING FOR
GUARDRAIL ANCHOR UNIT
GUARDRAIL ANCHOR UNIT TYPE B-77
FOR F-SHAPE BARRIER
STATE OF NORTH CAROLINA DEPT. OF TRANSPORTATION DIVISION OF HIGHWAYS RALEIGH, N.C.
SHEET 4 OF 7 862D03

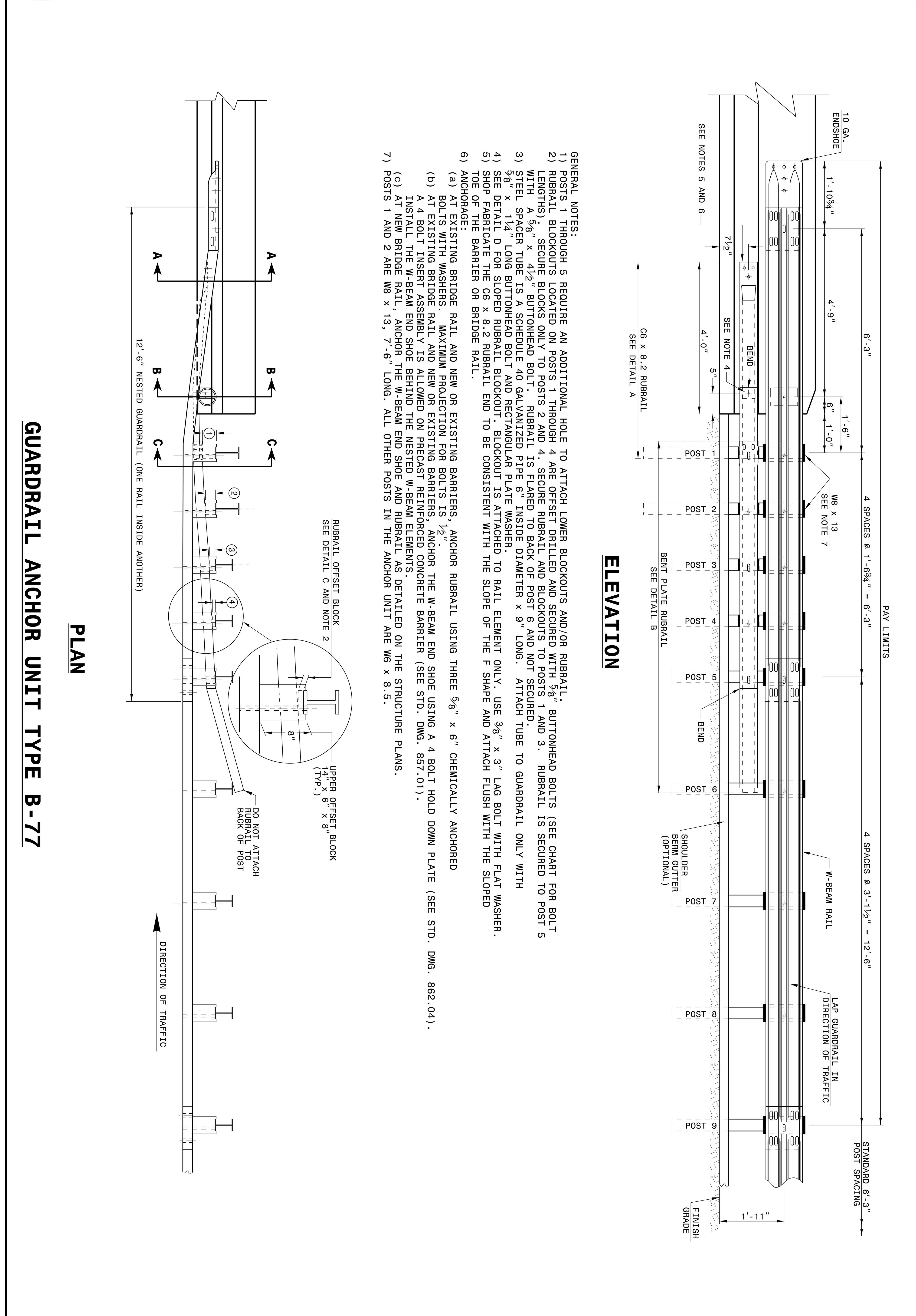

SHEET 4 OF 7 — 862D03

ENGLISH DETAIL DRAWING FOR
STRUCTURE ANCHOR UNIT
GUARDRAIL ANCHOR UNIT TYPE B-77
FOR F-SHAPE BARRIER

STATE OF
NORTH CAROLINA
DEPT. OF TRANSPORTATION
DIVISION OF HIGHWAYS
RALEIGH, N.C.

7/14/2015

NORTH CAROLINA PROFESSIONAL SEAL 022966 ENGINEER Joel S. Howerton

DocuSigned by: Joel Howerton

CONTRACT STANDARDS AND DEVELOPMENT UNIT
Office 919-707-6950 FAX 919-250-4119

SEE TITLE BLOCK

ORIGINAL BY: J HOWERTON DATE: 06-22-12
MODIFIED BY: DATE:
CHECKED BY: DATE:
FILE SPEC.:

PROJECT REFERENCE NO.	SHEET NO.
R-2915B	2C-2

STATE OF
NORTH CAROLINA
DEPT. OF TRANSPORTATION
DIVISION OF HIGHWAYS
RALEIGH, N.C.

ENGLISH DETAIL DRAWING FOR

2′-9″ CONCRETE CURB & GUTTER

SHEET 1 OF 1

846D01

GENERAL NOTES:
- PLACE CONTRACTION JOINTS AT 10′ INTERVALS, EXCEPT THAT A 15′ SPACING MAY BE USED WHEN A MACHINE IS USED OR WHEN SATISFACTORY SUPPORT FOR THE FACE FORM CAN BE OBTAINED WITHOUT THE USE OF TEMPLATES AT 10′ INTERVALS.
- JOINT SPACING MAY BE ALTERED IF REQUIRED BY THE ENGINEER.
- CONTRACTION JOINTS MAY BE INSTALLED WITH THE USE OF TEMPLATES OR FORMED BY OTHER APPROVED METHODS. MAKE NON-TEMPLATE FORMED JOINTS A MIN. OF 1½″ DEEP.
- FILL ALL CONSTRUCTION JOINTS WITH JOINT FILLER AND SEALER.
- SPACE EXPANSION JOINTS AT 90′ INTERVALS AND ADJACENT TO ALL RIGID OBJECTS.
- SEE RDWY. STD. DWG. NO. 846.01, SHEET 2 OF 3 FOR PLACEMENT IN SUPERELEVATIONS. (USE 2′-6″ CURB AND GUTTER RATES)

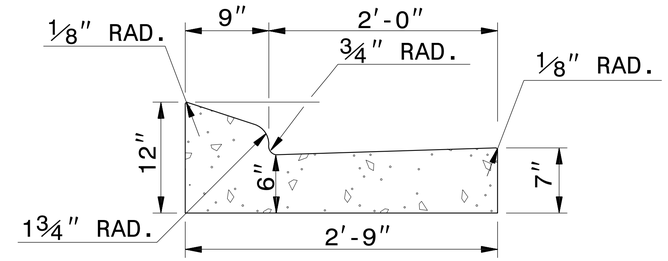

2′-9″ CURB AND GUTTER

SECTION VIEW OF CURB AND GUTTER

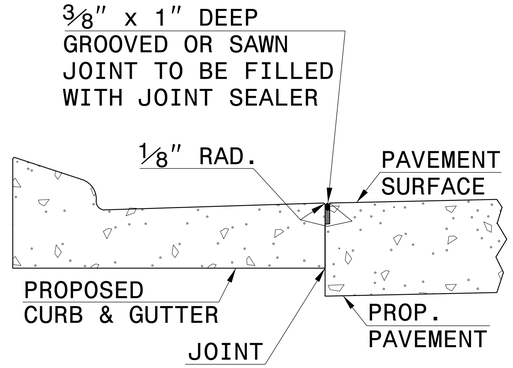

LONGITUDINAL JOINT

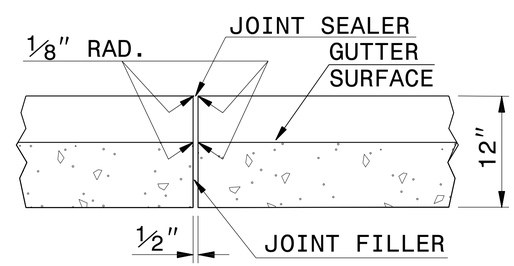

TRANSVERSE EXPANSION JOINT IN CURB AND GUTTER

SECTION VIEW OF JOINTS

STATE OF
NORTH CAROLINA
DEPT. OF TRANSPORTATION
DIVISION OF HIGHWAYS
RALEIGH, N.C.

ENGLISH DETAIL DRAWING FOR

2′-9″ CONCRETE CURB & GUTTER

SHEET 1 OF 1

846D01

7/14/2015

NORTH CAROLINA PROFESSIONAL SEAL 022966 ENGINEER Joel S. Howerton

DocuSigned by: Joel Howerton
873F3D17DCDC45F...

CONTRACT STANDARDS AND DEVELOPMENT UNIT
Office 919-707-6950 FAX 919-250-4119

SEE PLATE FOR TITLE

ORIGINAL BY: STD. 846.01 DATE:
MODIFIED BY: E.E. WARD DATE: 8-15-00
CHECKED BY: DATE:
FILE SPEC.: /usr/details/stand/c&g2′-9″.dgn

$$$$SYSTIME$$$$
$$$$USERNAME$$$$
$$$$DGNFILE$$$$

5/14/99

PROJECT REFERENCE NO.	SHEET NO.
R-2915B	2C-3

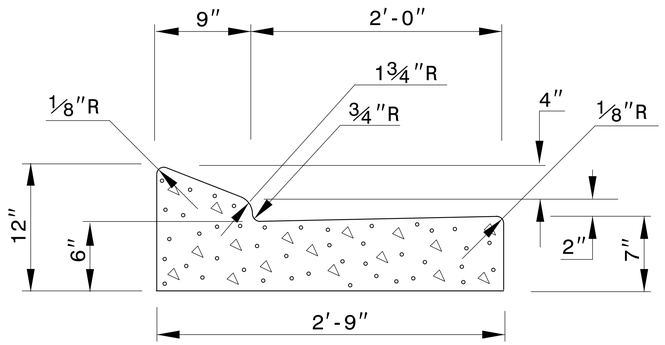

PROPOSED 2'-9" CURB & GUTTER

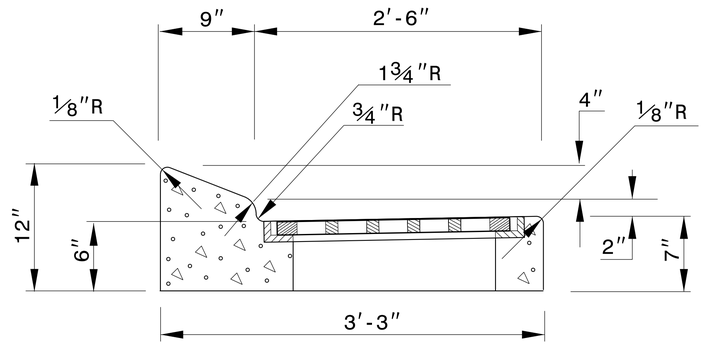

FRAME AND GRATE IN
PROPOSED 2'-9" CURB & GUTTER

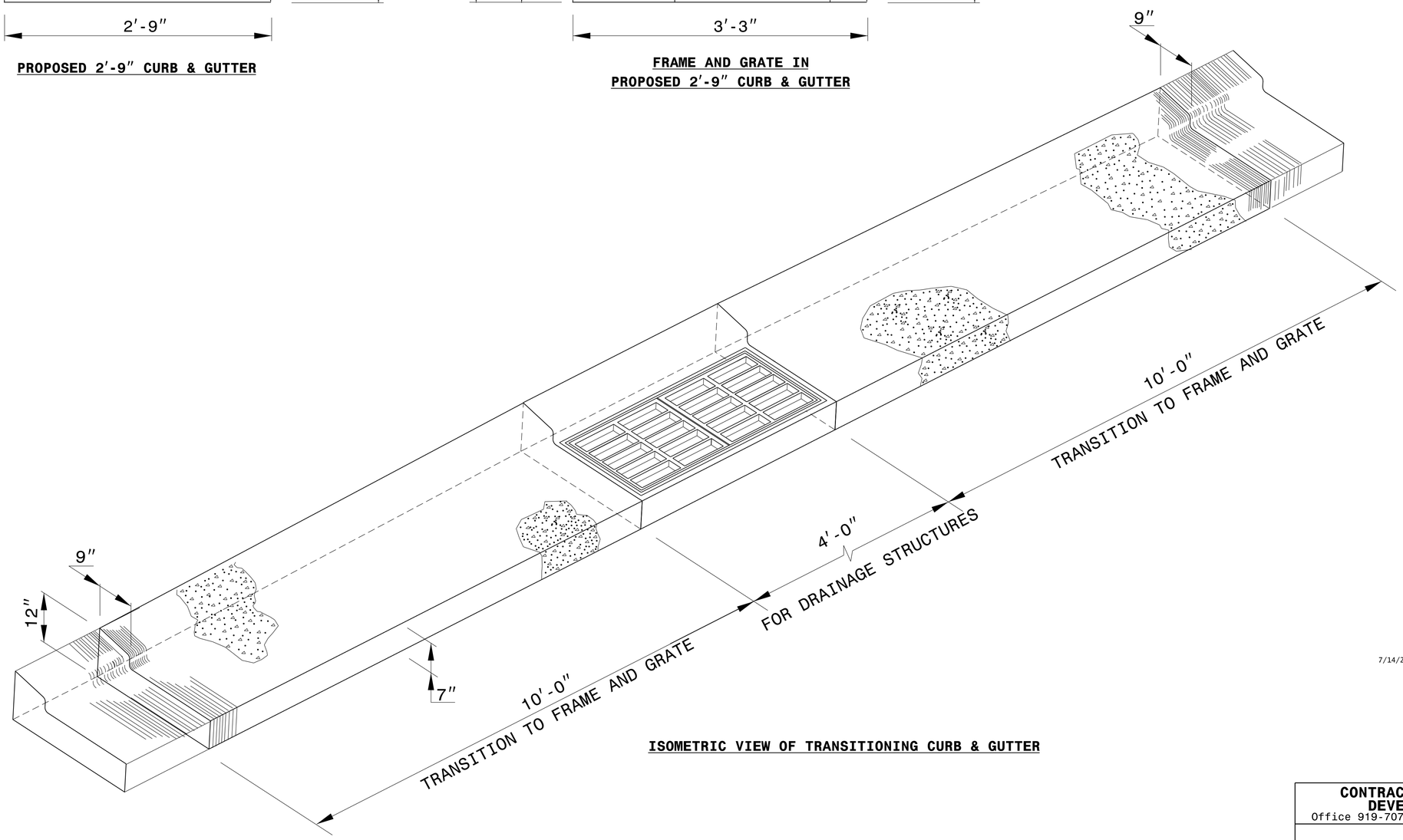

ISOMETRIC VIEW OF TRANSITIONING CURB & GUTTER

7/14/2015

NORTH CAROLINA PROFESSIONAL SEAL 022966 ENGINEER JOEL S. HOWERTON

DocuSigned by:
Joel Howerton
873F3D17DCDC45F...

CONTRACT STANDARDS AND DEVELOPMENT UNIT
Office 919-707-6950 FAX 919-250-4119

DETAIL OF 2'-9" TO FRAME AND GRATE

ORIGINAL BY: _____ DATE: _____
MODIFIED BY: _____ DATE: _____
CHECKED BY: _____ DATE: _____
FILE SPEC.: kkempf/english/curb gutter transition.dgn

PROJECT REFERENCE NO.	SHEET NO.
R-2915B	2C-4

STATE OF
NORTH CAROLINA
DEPT. OF TRANSPORTATION
DIVISION OF HIGHWAYS
RALEIGH, N.C.

ENGLISH DETAIL DRAWING FOR
GUIDE FOR BERM DRAINAGE OUTLET
36″ PIPE

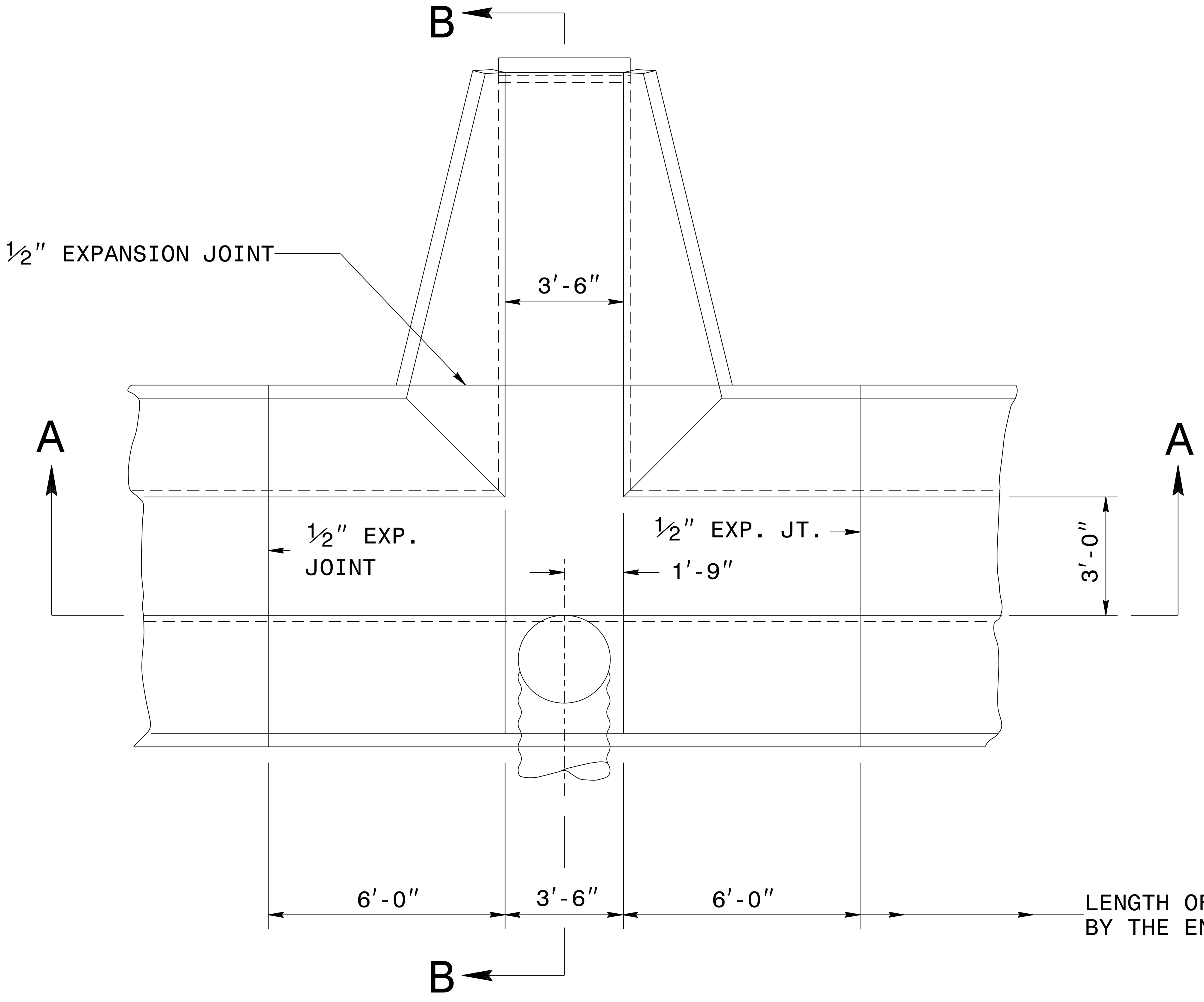

PLAN

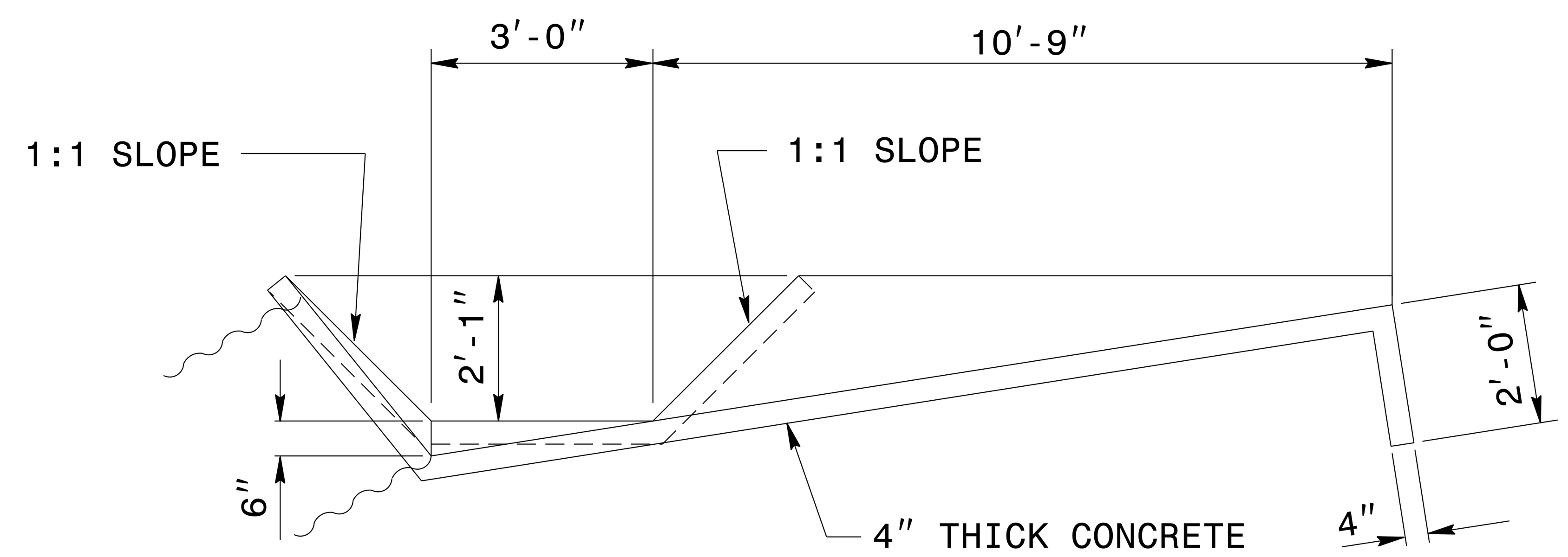

SECTION BB

GENERAL NOTES:

WHERE NECESSARY, ELBOWS MAY BE USED TO SKEW PIPE TO FIT INLETS WHERE THERE IS OFFSET BETWEEN THE INLET END AT BERM AND THE D.I.

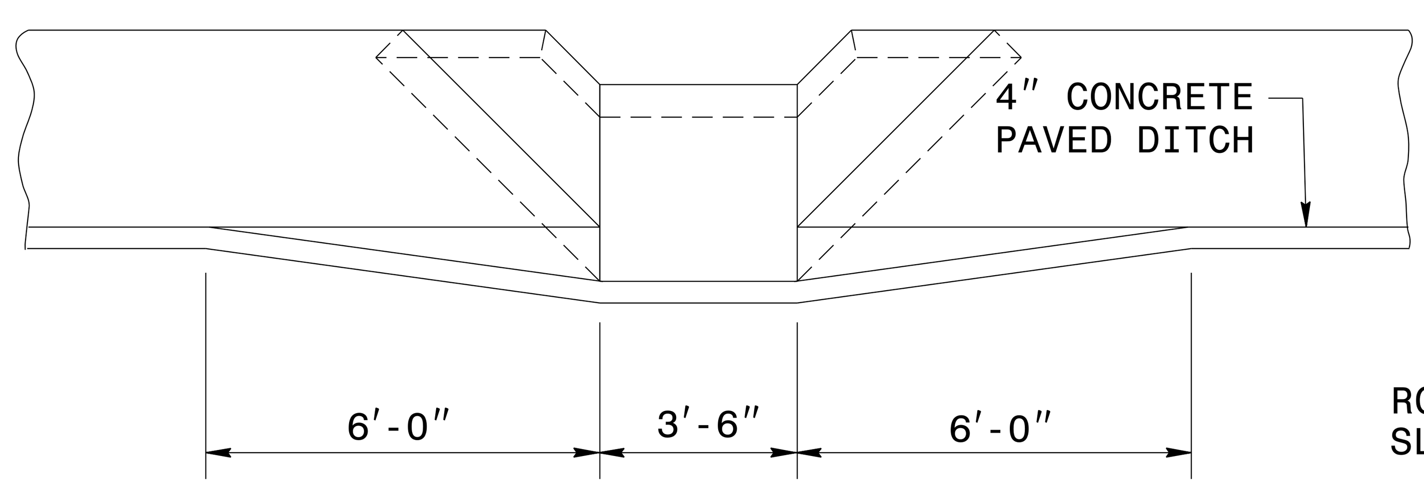

SECTION AA

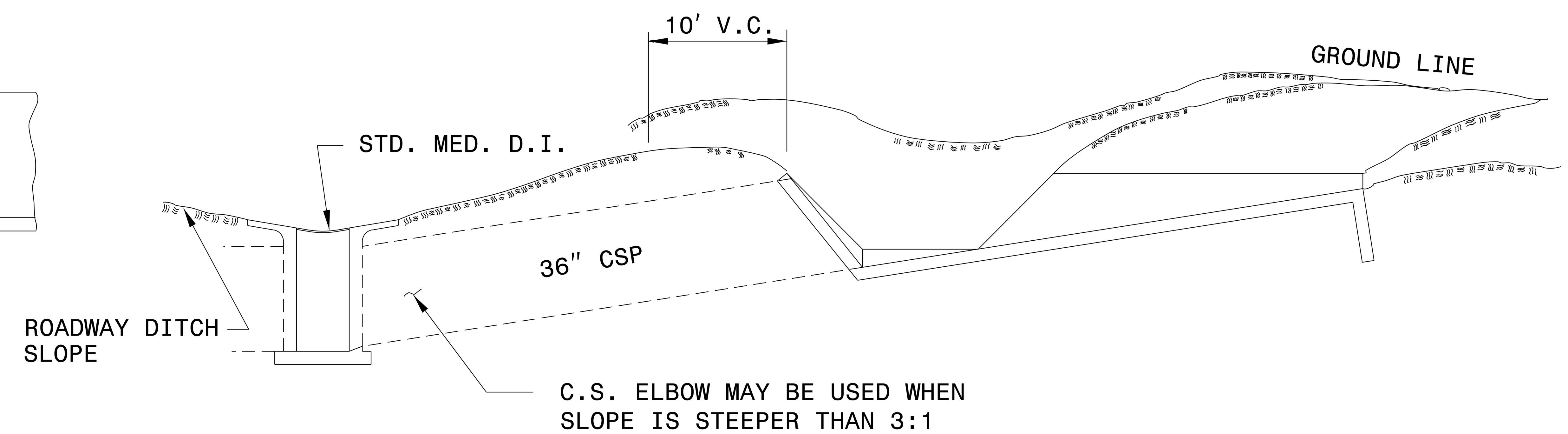

ELEVATION

SHEET 1 OF 1

850D11

STATE OF
NORTH CAROLINA
DEPT. OF TRANSPORTATION
DIVISION OF HIGHWAYS
RALEIGH, N.C.

ENGLISH DETAIL DRAWING FOR
GUIDE FOR BERM DRAINAGE OUTLET
36″ PIPE

SHEET 1 OF 1

850D11

7/14/2015

NORTH CAROLINA PROFESSIONAL SEAL 022966 ENGINEER Joel S. Howerton

DocuSigned by: Joel Howerton

CONTRACT STANDARDS AND DEVELOPMENT UNIT
Office 919-707-6950 FAX 919-250-4119

SEE PLATE FOR TITLE

ORIGINAL BY: 2002 STANDARDS DATE: 01-15-02
MODIFIED BY: E.E. WARD DATE: 10-26-04
CHECKED BY: DATE:
FILE SPEC.: usr/details/stand/850d01.dgn

$$$$$$SYSTIME$$$$
$$$$$$$$$DGN$$$$$$$$$$$$$$$$
$$$$USERNAME$$$$

PROJ. REFERENCE NO.	SHEET NO.
R-2915B	2C-5

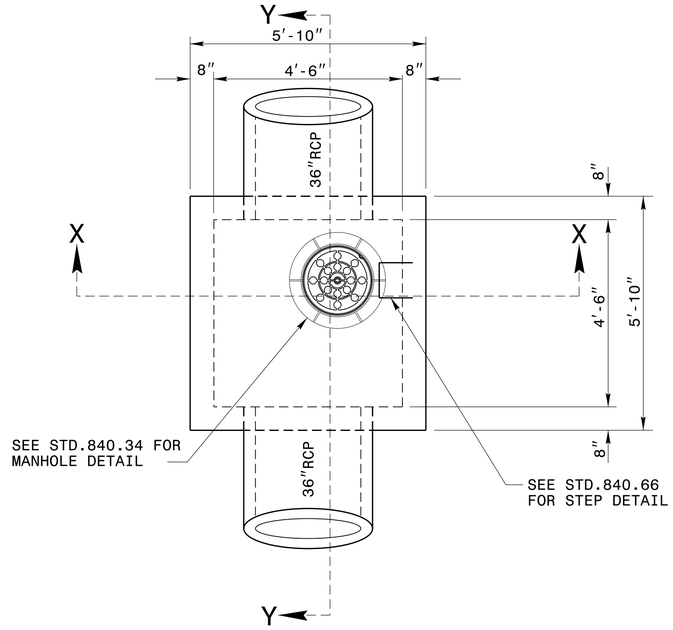

PLAN VIEW

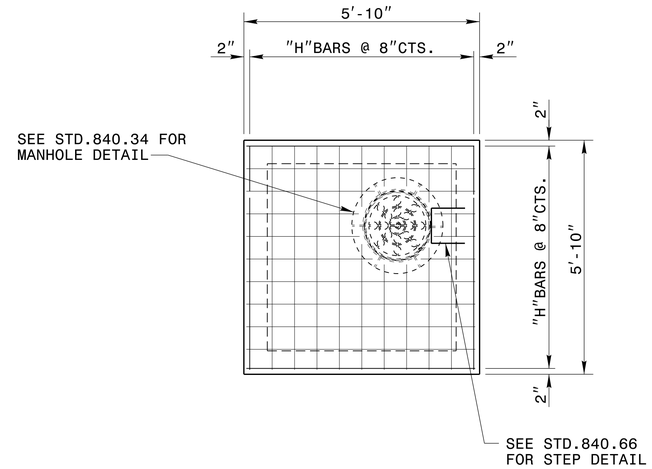

SLABS

GENERAL NOTES:

-THE BASE SLAB TO BE CONSTRUCTED BY FORMING.

-SEE STD. DWG. 840.00 FOR CONSTRUCTION OF BASE SLAB

-CLASS 'B' CONCRETE TO BE USED THROUGHOUT.

-CONSTRUCTION OPTIONS: MONOLITHIC POUR; 2" KEYWAY OR #4 BAR DOWELS AT 12" CENTERS AS DIRECTED BY THE ENGINEER.

-REINFORCING STEEL TO BE CUT, BENT OR RELOCATED TO POSITION PIPE AS DIRECTED BY THE ENGINEER.

-ALL EXPOSED CORNERS TO BE CHAMFERED 1".

-SEE STD. DRAWING 840.34 FOR CONSTRUCTION OF RISER AND MANHOLE.

-JUNCTION BOXES OVER 3'-6" IN DEPTH WITH MANHOLES WILL REQUIRE STEPS TO BE PLACED ON 12" CTRS. REFERENCE STD. NO. 840.66.

-MAINTAIN 2" MINIMUM CONCRETE COVERAGE ON ALL STEEL.

-DIMENSIONS MAY BE ADJUSTED AS DIRECTED BY THE ENGINEER.

BILL OF MATERIAL

REINFORCING STEEL					
BAR	NO.	LENGTH	LBS/FT.	QTY.	LBS
H	#4	5'-6"	0.668	132	485
V	#4	15'-8"	0.668	32	335
TOTAL WEIGHT STEEL					820
MASONARY QUANTITIES					
CLASS "B" CONCRETE (CU.YDS.)					9.2
PIPE DEDUCTIONS (CU.YDS.)					
2-36" CMP					-0.52
TOTAL CLASS "B" CONCRETE (CU.YDS.)					8.7

** 0.30 CU.YD. PER FOOT OF RISER HEIGHT.

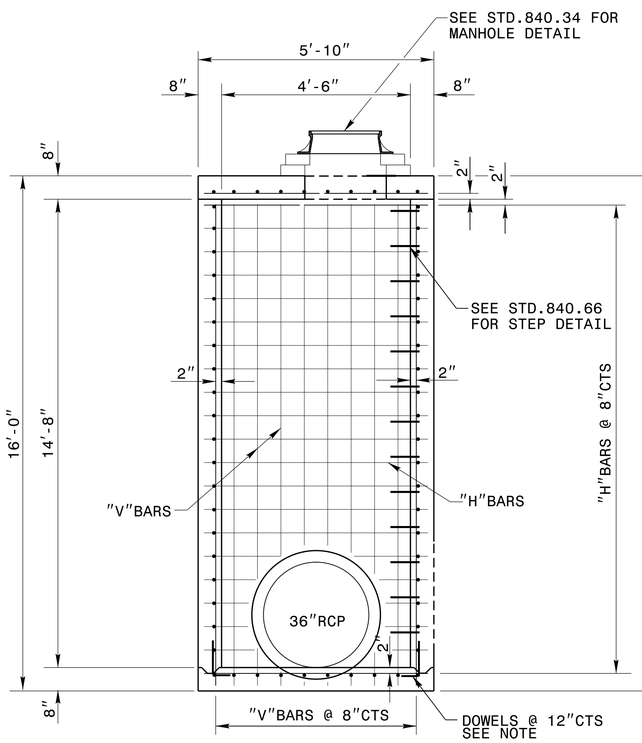

SECTION X-X

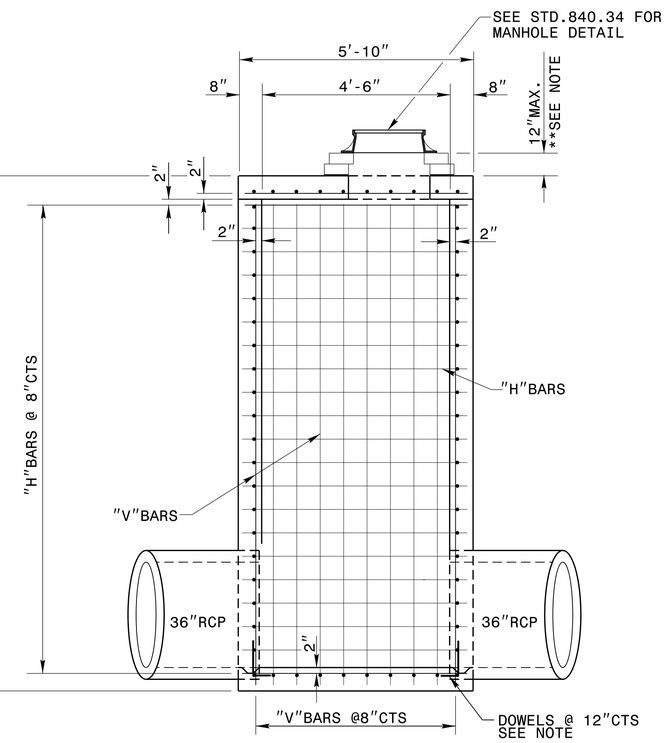

SECTION Y-Y

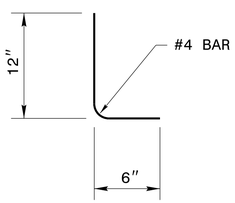

DOWEL

7/14/2015

NORTH CAROLINA PROFESSIONAL SEAL 022966 ENGINEER Joel S. Howerton

DocuSigned by: Joel Howerton 873F3D17DCDC45F...

STRUCTURE NO.0619

CONTRACT STANDARDS & DEVELOPMENT UNIT
STANDARDS AND SPECIAL DESIGN
Office 919-707-6950 FAX 919-250-4119

SPECIAL EXTRA DEPTH 36"JUNCTION BOX

ORIGINAL BY: _____ DATE: _____
MODIFIED BY: kakempf DATE: 04-27-15
CHECKED BY: _____ DATE: _____
FILE SPEC.: details/kkempf/english/R2915B extra depth 36jb.dgn

PROJECT REFERENCE NO.	SHEET NO.
R-2915B	2D-1
R/W SHEET NO.	

HYDRAULICS ENGINEER

NORTH CAROLINA PROFESSIONAL SEAL 9334 ENGINEER W. HENRY WELLS JR.

7/27/2016

DocuSigned by: W. Henry Wells Jr.

DRAINAGE DETAILS

DETAIL #1
LATERAL GRASSED SWALE
(Not to Scale)

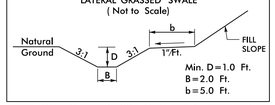

FROM STA. 160+20 TO STA. 161+00 –L– RT
FROM STA. 234+35 TO STA. 238+00 –L– RT

DETAIL #2
TOE PROTECTION
(Not to Scale)

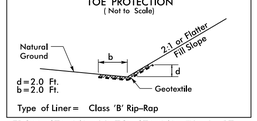

FROM STA. 161+00 TO STA. 161+70 –L– RT
FROM STA. 197+50 TO STA. 197+80 –L– RT
FROM STA. 250+00 TO STA. 251+50 –L– RT
FROM STA. 251+00 TO STA. 252+50 –L– LT

DETAIL #3
STANDARD BASE DITCH
(Not to Scale)

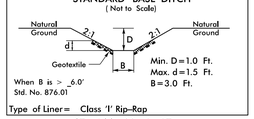

STA. 166+00 –L– LT

DETAIL #4
SPECIAL CUT DITCH
(Not to Scale)

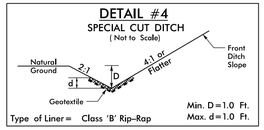

FROM STA. 16+20 TO STA. 16+90 –Y9– RT

DETAIL #5
STANDARD BASE DITCH
(Not to Scale)

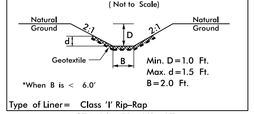

STA. 16+50 –Y9– LT

DETAIL #6
LATERAL GRASSED SWALE
(Not to Scale)

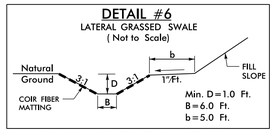

FROM STA. 180+00 TO STA. 182+00 –L– LT

DETAIL #7
SPECIAL CUT DITCH wHINGE
(Not to Scale)

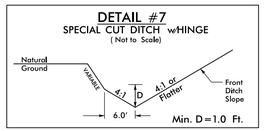

FROM STA. 196+50 TO STA. 197+00 –L– RT

DETAIL #8
STANDARD BASE DITCH
(Not to Scale)

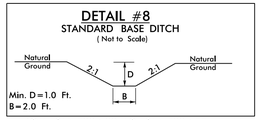

FROM STA. 198+80 TO STA. 199+55 –L– LT

DETAIL #9
RIP RAP AT EMBANKMENT
(Not to Scale)

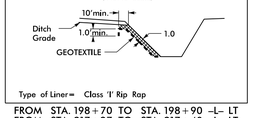

FROM STA. 198+70 TO STA. 198+90 –L– LT
FROM STA. 217+27 TO STA. 217+40 –L– LT
FROM STA. 242+50 TO STA. 242+70 –L– RT
FROM STA. 243+40 TO STA. 243+60 –L– LT

DETAIL #10
SPECIAL CUT GRASSED SWALE
(Not to Scale)

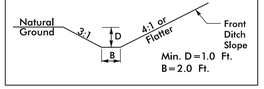

FROM STA. 211+80 TO STA. 215+55 –L– RT

DETAIL #11
BERM DITCH
(Not to Scale)

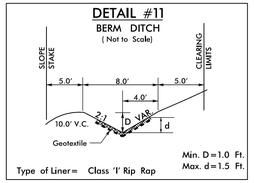

FROM STA. 171+50 TO STA. 172+75 –L– RT

DETAIL #12
FALSE CUT
(Not to Scale)

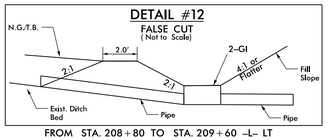

FROM STA. 208+80 TO STA. 209+60 –L– LT

DETAIL #13
STANDARD BASE DITCH
(Not to Scale)

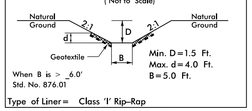

STA. 217+50 –L– RT

DETAIL #14
SPECIAL CUT GRASSED SWALE
(Not to Scale)

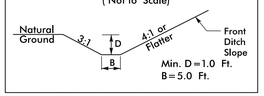

FROM STA. 222+50 TO STA. 229+50 –L– LT

DETAIL #15
SPECIAL LATERAL 'V' DITCH
(Not to Scale)

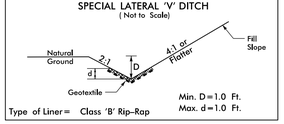

FROM STA. 10+55 TO STA. 12+18 –Y11– RT
FROM STA. 13+95 TO STA. 14+55 –Y12– RT

DETAIL #16
SPECIAL LATERAL BASE DITCH
(Not to Scale)

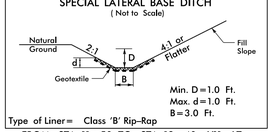

FROM STA. 11+50 TO STA. 12+40 –Y11– LT

DETAIL #17
ROADWAY DITCH
(Not to Scale)

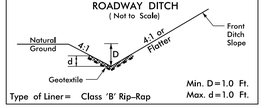

FROM STA. 252+00 TO STA. 255+50 –DET– RT
FROM STA. 253+21 TO STA. 255+50 –DET– LT
FROM STA. 256+42 TO STA. 261+05 –DET– RT
FROM STA. 256+50 TO STA. 260+50 –DET– LT

DETAIL #18
STANDARD BASE DITCH
(Not to Scale)

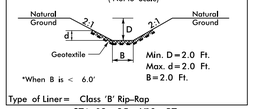

STA. 13+35 –Y10– RT

DETAIL #19
STANDARD BASE DITCH
(Not to Scale)

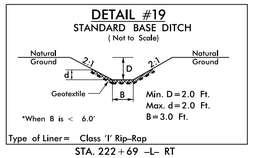

STA. 222+69 –L– RT

DETAIL #20
LATERAL GRASSED SWALE
(Not to Scale)

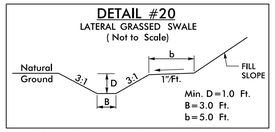

FROM STA. 244+00 TO STA. 247+00 –L– LT

DETAIL #21
LATERAL 'V' DITCH
(Not to Scale)

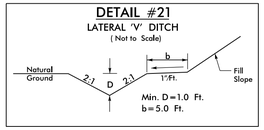

FROM STA. 247+00 TO STA. 249+00 –L– LT

DETAIL #22
LATERAL BASE DITCH
(Not to Scale)

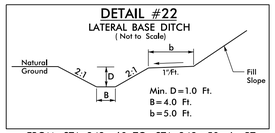

FROM STA. 242+60 TO STA. 248+50 –L– RT

DETAIL #23
LATERAL BASE DITCH
(Not to Scale)

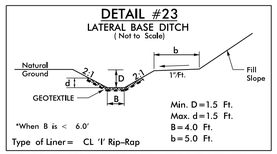

FROM STA. 248+50 TO STA. 250+00 –L– RT

DETAIL #24
STANDARD BASE DITCH
(Not to Scale)

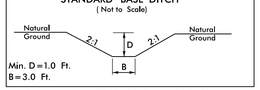

FROM STA. 243+50 TO STA. 244+00 –L– LT

DETAIL #25
SPECIAL CUT BASE DITCH
(Not to Scale)

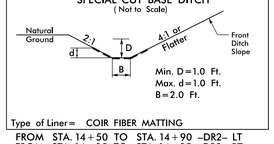

FROM STA. 14+50 TO STA. 14+90 –DR2– LT
FROM STA. 14+25 TO STA. 14+35 –DR2– RT

DETAIL #26
BERM BASE DITCH
(Not to Scale)

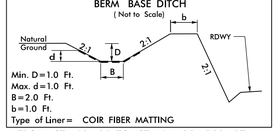

FROM STA. 13+85 TO STA. 14+25 –DR2– RT

DETAIL #27
STANDARD BASE GRASSED SWALE
(Not to Scale)

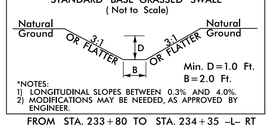

*NOTES:
1) LONGITUDINAL SLOPES BETWEEN 0.3% AND 4.0%.
2) MODIFICATIONS MAY BE NEEDED, AS APPROVED BY ENGINEER.

FROM STA. 233+80 TO STA. 234+35 –L– RT

DETAIL #28
LATERAL BASE DITCH
(Not to Scale)

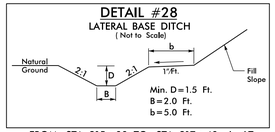

FROM STA. 215+00 TO STA. 217+40 –L– LT

DETAIL #29
PIPE OUTLET CHANNEL
(Not to Scale)

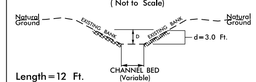

STA. 189+40 –L– LT

DETAIL #30
ROADWAY DITCH
(Not to Scale)

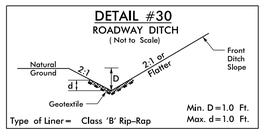

FROM STA. 10+50 TO STA. 15+43 –DR1– LT & RT
FROM STA. 10+50 TO STA. 14+90 –DR2– RT
FROM STA. 10+50 TO STA. 14+50 –DR2– LT
FROM STA. 10+50 TO STA. 16+00 –Y9– LT & RT
FROM STA. 10+84 TO STA. 15+00 –DR3– LT
FROM STA. 11+30 TO STA. 15+00 –DR3– RT
FROM STA. 17+00 TO STA. 19+72 –DR3– RT
FROM STA. 17+00 TO STA. 19+30 –DR3– LT
FROM STA. 10+25 TO STA. 11+55 –DR5– LT
FROM STA. 10+25 TO STA. 11+00 –DR5– RT
FROM STA. 10+50 TO STA. 12+10 –Y13A– RT
FROM STA. 10+50 TO STA. 12+50 –Y13A– LT

5/14/99

6/26/2015 2:03:21 PM
USER:xcsmond R-2915B_hyd_DETAILS.dgn

PROJECT REFERENCE NO.	SHEET NO.
R-2915B	2D-2
R/W SHEET NO.	

HYDRAULICS ENGINEER

NORTH CAROLINA PROFESSIONAL SEAL 9334 ENGINEER W. HENRY WELLS JR.

7/27/2015

DocuSigned by: W. Henry Wells Jr.

DRAINAGE DETAILS

DETAIL #31

FILTER BERM SECTION VIEW

(Not to Scale)

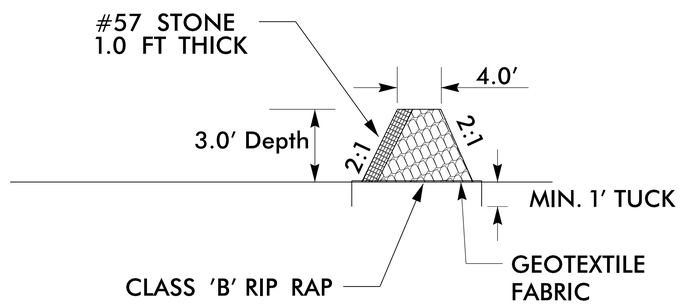

EST 10 TONS #57 STONE
EST 40 TONS CL B RIP RAP
EST 70 SY GEOTEXTILE

STA. 198+00 –L– RT

PREFORMED SCOUR HOLE

*NOT TO SCALE

PLAN VIEW

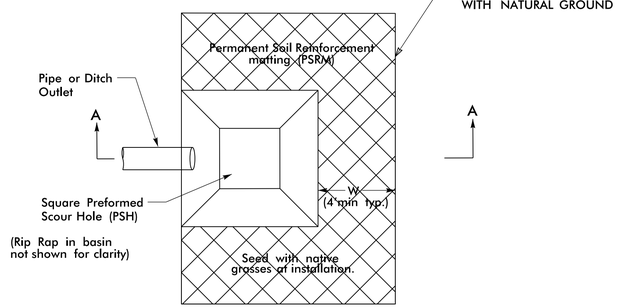

SECTION A–A

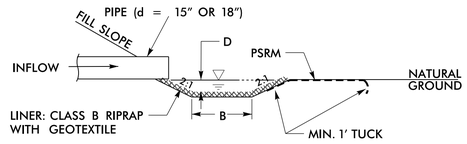

STATION	B FT.	D FT.
FOR 15" PIPE	4.0	1.0
165+00 -L- LT	4.0	1.0
171+50 -L- LT	4.0	1.0
200+00 -L- RT	4.0	1.0
204+00 -L- RT	4.0	1.0
206+50 -L- RT	4.0	1.0
211+27 -L- RT	4.0	1.0
216+75 -L- RT	4.0	1.0
221+95 -L- RT	4.0	1.0
231+50 -L- RT	4.0	1.0
232+80 -L- RT	4.0	1.0
238+00 -L- LT	4.0	1.0
FOR 18" PIPE	6.0	1.0
182+30 -L- LT	6.0	1.0

DETAIL #32

FALSE SUMP
(Not to Scale)

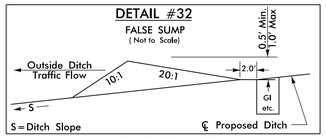

STA. 178+63 –L– RT
STA. 182+84 –L– RT
STA. 188+90 –L– RT
STA. 192+15 –L– RT
STA. 195+60 –L– RT
STA. 197+14 –L– RT
STA. 256+75 –DET– LT
STA. 14+86 –Y10– LT
STA. 15+72 –Y10– LT

DETAIL #34

BERM DITCH
(Not to Scale)

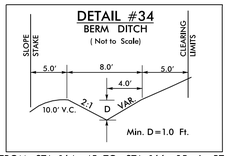

FROM STA. 164+45 TO STA. 166+05 –L– RT
FROM STA. 170+65 TO STA. 171+50 –L– RT

DETAIL #33

FALSE SUMP
(Not to Scale)

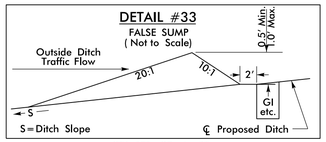

STA. 171+37 –L– RT
STA. 173+87 –L– RT
STA. 201+62 –L– LT
STA. 204+14 –L– LT
STA. 206+64 –L– LT
STA. 252+10 –DET– RT
STA. 12+90 –Y9– RT
STA. 16+10 –Y9– RT
STA. 14+32 –DR3– RT

DETAIL #35

RIP RAP SLOPE PROTECTION
(Not to Scale)

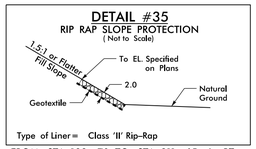

Type of Liner= Class 'II' Rip-Rap

FROM STA. 199+70 TO STA. 211+65 –L– RT
FROM STA. 215+50 TO STA. 219+20 –L– RT
FROM STA. 221+63 TO STA. 223+80 –L– RT

5/14/99

6/26/2015 2:03:24 PM
USER:
R-2915B_hyd_DETAILS.dgn

PROJECT REFERENCE NO.	SHEET NO.
R-2915B	2D-3
R/W SHEET NO.	

HYDRAULICS ENGINEER

NORTH CAROLINA PROFESSIONAL SEAL 9334 ENGINEER W. HENRY WELLS JR.

7/27/2015

DocuSigned by: W. Henry Wells Jr.

DRAINAGE DETAILS

DETAIL #36

(NOT TO SCALE)

SKEWED MULTI–BARREL CULVERT LOW FLOW CHANNEL,SILLS AND FLOOD PLAIN

*NOTES:

1) NATIVE MATERIAL BETWEEN SILLS/BAFFLES IN THE CULVERT SHALL PROVIDE A CONTINUOUS LOW FLOW CHANNEL. NATIVE MATERIAL CONSISTS OF MATERIAL THAT IS EXCAVATED FROM THE THE STREAM OR FLOODPLAIN AT THE PROJECT SITE DURING CONSTRUCTION. ONLY MATERIAL THAT IS EXCAVATED FROM THE STREAM BED MAY BE USED TO LINE THE LOW FLOW CULVERT BARREL. RIP–RAP MAY BE USED TO SUPPLEMENT THE NATIVE MATERIAL IN THE HIGH FLOW CULVERT BARREL(S). IF RIP–RAP IS USED TO LINE THE HIGH FLOW CULVERT BARREL(S), NATIVE MATERIAL SHOULD BE PLACED ON TOP TO FILL VOIDS AND PROVIDE A FLAT SURFACE FOR ANIMAL PASSAGE. NATIVE MATERIAL IS SUBJECT TO APPROVAL BY THE ENGINEER AND MAY BE SUBJECT TO PERMIT CONDITIONS.

2) SILLS/BAFFLES ARE TO BE 1.0 FT. WIDE, CAST SEPARATELY AND ATTACHED BY DOWELS.

3) TOP OF LOW FLOW SILLS/BAFFLES SHOULD MATCH STREAM BED ELEVATION IN LOW FLOW CHANNEL OF STREAM. (THALWEG)

4) DO NOT SET ELEVATION OF HIGH SILL/BAFFLES ABOVE BANK FULL.

5) NUMBER OF SILL/BAFFLES DETERMINED BY THE ENGINEER.

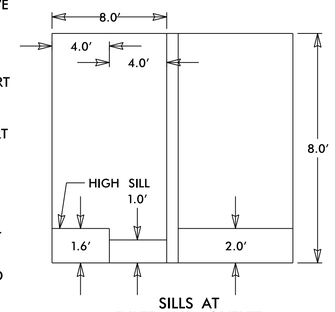

SILLS AT INLET AND OUTLET

PLAN VIEW

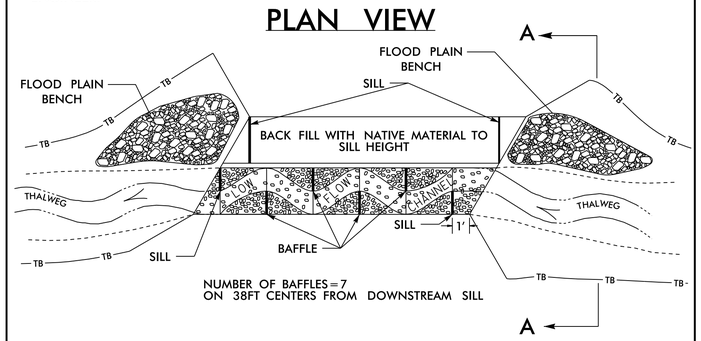

SECTION A–A

INLET AND OUTLET CHANNEL

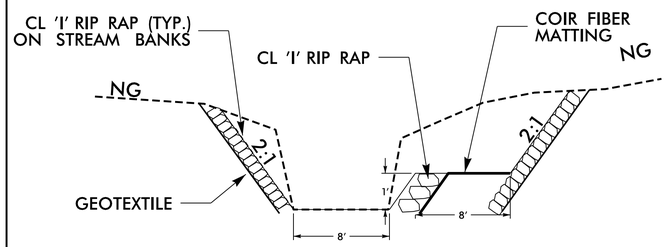

STA. 160 + 40.08 –L– RT
STA. 162 + 28.52 –L– LT

6/26/2015 2:03:26 PM
USER:: scheuerpd
V:\R-2915B_hyd_DETAILS.dgn

5/14/99

PROJECT REFERENCE NO.	SHEET NO.
R-2915B	2G-1

GEOTECHNICAL ENGINEER

NORTH CAROLINA PROFESSIONAL SEAL 022246 ENGINEER SCOTT A. HIDDEN

DocuSigned by: Scott A. Hidden 7/10/2015
F760CAEB96FC4D3...
SIGNATURE DATE

ENGINEER

SIGNATURE DATE

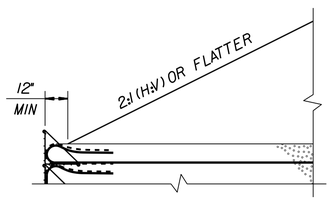

SLOPE CASE

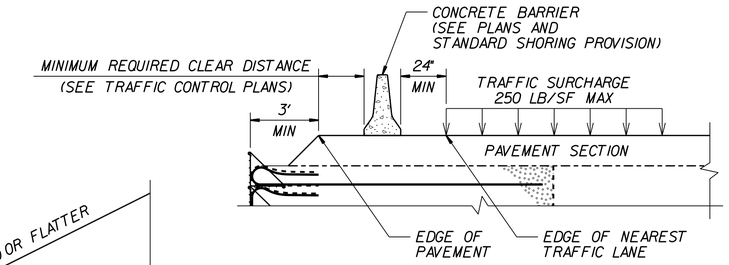

SURCHARGE CASE

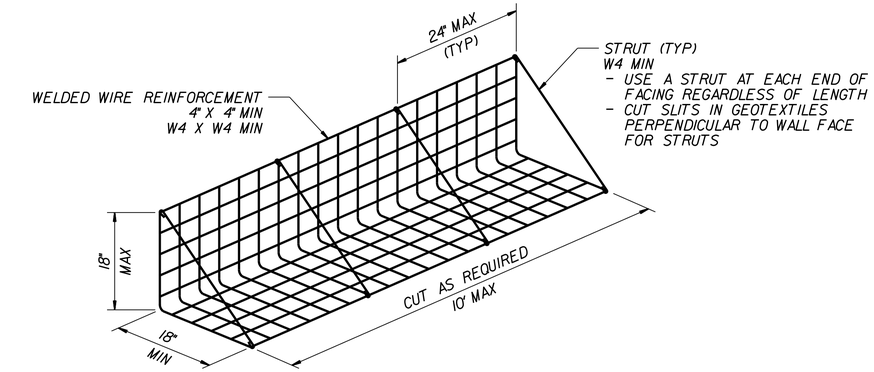

FACING DETAIL

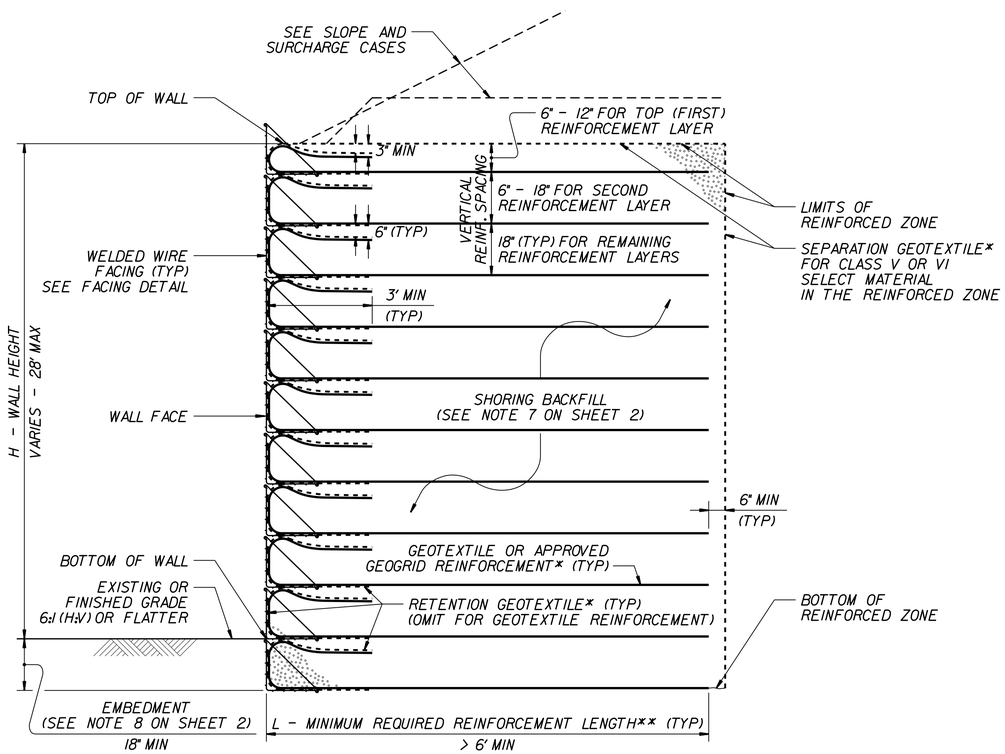

STANDARD TEMPORARY WALL

(FOR STANDARD TEMPORARY WALLS ON STRUCTURES, SEE TEMPORARY WALL ON STRUCTURE DETAIL ON SHEET 2.)
*SEE GEOSYNTHETIC PLACEMENT DETAILS ON SHEET 2.
**SEE REINFORCEMENT TABLES ON SHEET 3.

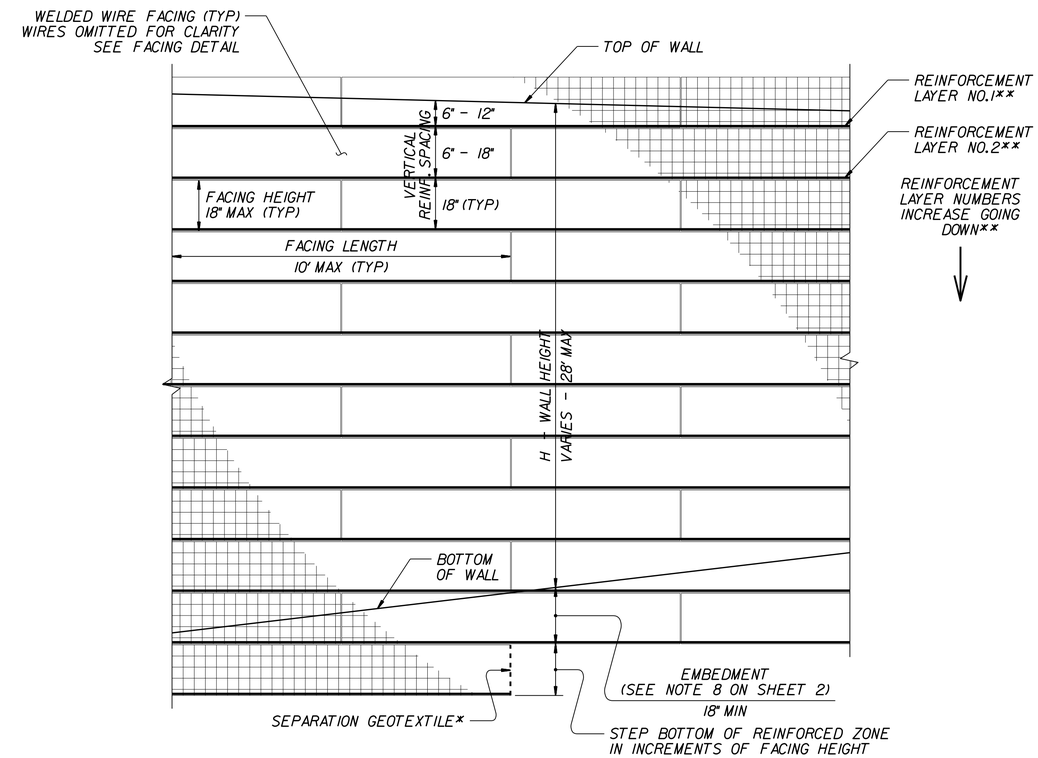

STANDARD TEMPORARY WALL – PARTIAL ELEVATION

*SEE GEOSYNTHETIC PLACEMENT DETAILS ON SHEET 2.
**SEE REINFORCEMENT TABLES ON SHEET 3.

NORTH CAROLINA DEPARTMENT OF TRANSPORTATION
DIVISION OF HIGHWAYS

GEOTECHNICAL ENGINEERING UNIT

STANDARD DETAIL NO. 1801.02

STANDARD TEMPORARY WALL
SHEET 1 0F 3

DATE: 11-19-13

PROJECT REFERENCE NO.	SHEET NO.
R-2915B	2G-2

GEOTECHNICAL ENGINEER

NORTH CAROLINA PROFESSIONAL SEAL 022246 ENGINEER SCOTT A. HIDDEN

DocuSigned by: Scott A. Hidden 7/10/2015
F760CAEB96FC4D3...
SIGNATURE DATE

ENGINEER

SIGNATURE DATE

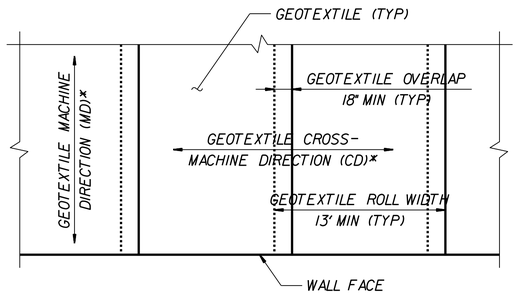

GEOTEXTILE PLACEMENT

(100% COVERAGE MIN FOR GEOTEXTILE REINFORCEMENT)

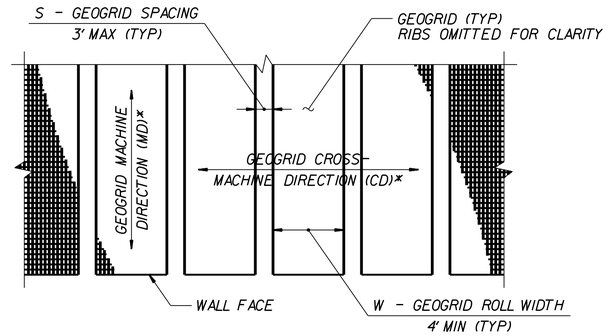

GEOGRID PLACEMENT

(80% COVERAGE MIN FOR GEOGRID REINFORCEMENT – $\frac{W}{W+S} \times 100 \geq 80\%$, SEE NOTE 11)

GEOSYNTHETIC PLACEMENT DETAILS

(PLAN VIEW)
*SEE NOTE 12.

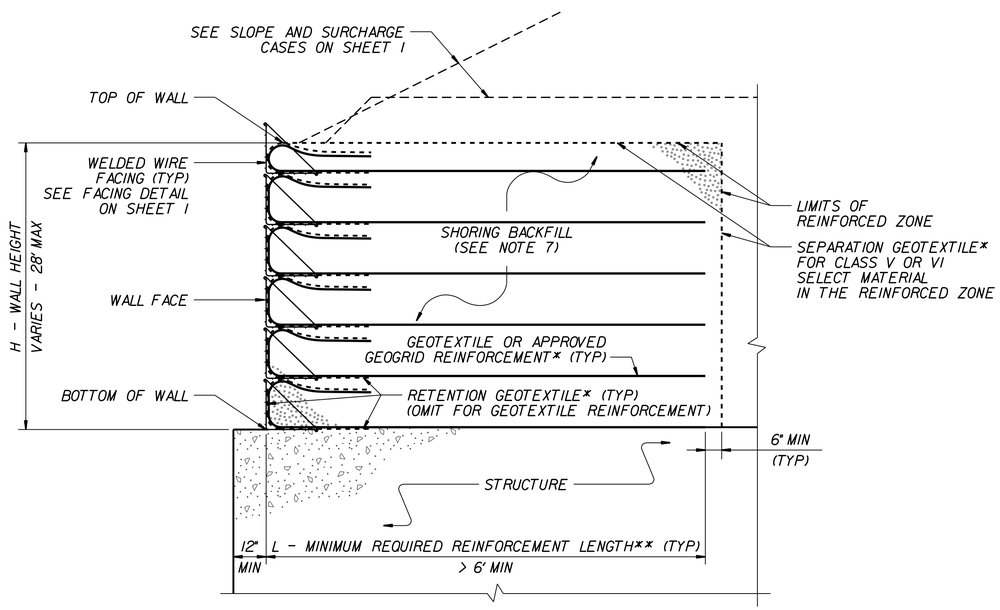

TEMPORARY WALL ON STRUCTURE DETAIL

*SEE GEOSYNTHETIC PLACEMENT DETAILS.
**SEE REINFORCEMENT TABLES ON SHEET 3.

NOTES:

1. AT THE CONTRACTOR'S OPTION, USE STANDARD TEMPORARY WALLS AS NOTED IN THE PLANS.
2. FOR STANDARD TEMPORARY WALLS, SEE STANDARD SHORING PROVISION.
3. STANDARD TEMPORARY WALLS ARE BASED ON THE FOLLOWING IN-SITU ASSUMED SOIL PARAMETERS:
   UNIT WEIGHT, γ = 120 LB/CF
   FRICTION ANGLE, ϕ = 30 DEGREES
   COHESION, c = 0 LB/SF
4. DO NOT USE STANDARD TEMPORARY WALLS IF ASSUMED SOIL PARAMETERS ARE NOT APPLICABLE.
5. DO NOT USE STANDARD TEMPORARY WALLS WHEN VERY LOOSE OR SOFT SOIL OR MUCK IS BELOW TEMPORARY WALLS.
6. USE GROUNDWATER ELEVATION NOTED IN THE PLANS. IF NO GROUNDWATER ELEVATION IS SHOWN IN THE PLANS, ASSUME GROUNDWATER DEPTH IS LESS THAN 7' BELOW BOTTOM OF REINFORCED ZONE. DO NOT USE STANDARD TEMPORARY WALLS IF GROUNDWATER IS ABOVE BOTTOM OF REINFORCED ZONE.
7. DO NOT USE A-2-4 SOIL FOR STANDARD TEMPORARY WALLS AROUND CULVERTS OR IN THE REINFORCED ZONE OF STANDARD TEMPORARY WALLS FOR SLOPE CASES. DO NOT USE CLASS VI SELECT MATERIAL IN THE REINFORCED ZONE OF STANDARD TEMPORARY WALLS WITH GEOTEXTILE REINFORCEMENT.
8. EMBEDMENT IS NOT REQUIRED FOR STANDARD TEMPORARY WALLS ON STRUCTURES OR ROCK AS DETERMINED BY THE ENGINEER.
9. DO NOT USE MORE THAN 4 DIFFERENT REINFORCEMENT STRENGTHS FOR EACH STANDARD TEMPORARY WALL.
10. GEOGRIDS ARE TYPICALLY APPROVED FOR ULTIMATE TENSILE STRENGTHS IN THE MACHINE DIRECTION (MD) AND CROSS-MACHINE DIRECTION (CD) OR SHORT-TERM DESIGN STRENGTHS FOR A 3-YEAR DESIGN LIFE IN THE MD BASED ON MATERIAL TYPE. THE LIST OF APPROVED GEOGRIDS WITH DESIGN STRENGTHS IS AVAILABLE FROM: connect.ncdot.gov/resources/Materials/Pages/SoilsLaboratory.aspx
    DEFINE MATERIAL TYPE FROM THE WEBSITE ABOVE FOR SHORING BACKFILL AS FOLLOWS:

MATERIAL TYPE	SHORING BACKFILL
BORROW	A-2-4 SOIL
FINE AGGREGATE	CLASS II, TYPE I OR CLASS III SELECT MATERIAL
COARSE AGGREGATE	CLASS V OR VI SELECT MATERIAL

    IF THE WEBSITE DOES NOT LIST A SHORT-TERM DESIGN STRENGTH FOR AN APPROVED GEOGRID, USE A SHORT-TERM DESIGN STRENGTH EQUAL TO THE ULTIMATE TENSILE STRENGTH DIVIDED BY 3.5 FOR THE GEOGRID REINFORCEMENT.
11. FOR GEOGRID REINFORCEMENT WITH LESS THAN 100% COVERAGE, STAGGER REINFORCEMENT SO GEOGRIDS ARE CENTERED OVER GAPS IN THE REINFORCEMENT LAYER BELOW.
12. AT THE CONTRACTOR'S OPTION, REINFORCEMENT MAY BE INSTALLED WITH THE MD PARALLEL TO THE WALL FACE IF BOTH OF THE FOLLOWING CONDITIONS OCCUR:
    - W (REINFORCEMENT ROLL WIDTH) ≥ (MINIMUM REQUIRED REINFORCEMENT LENGTH) + 4.5' AND
    - REINFORCEMENT STRENGTH IN CD ≥ MINIMUM REQUIRED REINFORCEMENT STRENGTH IN MD.
13. SUBMIT A "STANDARD TEMPORARY WALL SELECTION FORM" AT LEAST 7 DAYS BEFORE STARTING TEMPORARY WALL CONSTRUCTION. STANDARD SHORING SELECTION FORMS ARE AVAILABLE FROM: connect.ncdot.gov/resources/Geological/Pages/Geotech_Forms_Details.aspx
14. DO NOT PLACE SHORING BACKFILL OR REINFORCEMENT UNTIL EXCAVATION DIMENSIONS AND FOUNDATION MATERIAL ARE APPROVED.
15. FOR STANDARD TEMPORARY WALLS WITH PILE FOUNDATIONS IN THE REINFORCED ZONE, DRIVE PILES THROUGH REINFORCEMENT AFTER CONSTRUCTING TEMPORARY WALLS.
16. DO NOT SPLICE OR OVERLAP REINFORCEMENT SO SEAMS ARE PARALLEL TO THE WALL FACE.
17. CONTACT THE ENGINEER WHEN EXISTING OR FUTURE OBSTRUCTIONS SUCH AS FOUNDATIONS, PAVEMENTS, PIPES, INLETS OR UTILITIES WILL INTERFERE WITH REINFORCEMENT.
18. FOR STANDARD TEMPORARY WALLS WITH INTERIOR ANGLES LESS THAN 90 DEGREES, WRAP GEOSYNTHETICS AT ACUTE CORNERS AS DIRECTED BY THE ENGINEER.
19. FOR STANDARD TEMPORARY WALLS WITH TOP OF WALL WITHIN 5' OF FINISHED GRADE, REMOVE TOP FACING AND INCORPORATE TOP REINFORCEMENT LAYER INTO FILL WHEN PLACING FILL IN FRONT OF WALL.

STATE OF NORTH CAROLINA DEPARTMENT OF TRANSPORTATION

NORTH CAROLINA
DEPARTMENT OF TRANSPORTATION
DIVISION OF HIGHWAYS

GEOTECHNICAL ENGINEERING UNIT

STANDARD DETAIL NO. 1801.02

STANDARD
TEMPORARY WALL
SHEET 2 OF 3

DATE: 11-19-13

PROJECT REFERENCE NO.	SHEET NO.
R-2915B	2G-3

GEOTECHNICAL ENGINEER

NORTH CAROLINA PROFESSIONAL SEAL 022246 ENGINEER SCOTT A. HIDDEN

DocuSigned by: Scott A. Hidden 7/10/2015
F760CAEB96FC4D3...
SIGNATURE DATE

ENGINEER

SIGNATURE DATE

SLOPE OR SURCHARGE CASE	GROUNDWATER DEPTH BELOW BOTTOM OF REINFORCED ZONE (SEE NOTE 6 ON SHEET 2) (FT)	SHORING BACKFILL TYPE IN THE REINFORCED ZONE (SEE NOTE 7 ON SHEET 2)	H - WALL HEIGHT (FT)																								
			< 4	5	6	7	8	9	10	11	12	13	14	15	16	17	18	19	20	21	22	23	24	25	26	27	28
SLOPE CASE	> 0	CLASS II,TYPE I, CLASS III,CLASS V OR CLASS VI SELECT MATERIAL	6	6	7	8	9	11	12	13	13	14	15	16	17	18	19	20	21	22	23	24	24	25	26	27	27
SURCHARGE CASE	> 0 TO 7 FOR H < 20′ > 0 TO 10 FOR H ≥ 20′	ALL SHORING BACKFILL TYPES	6	7	7	8	8	9	9	10	11	11	12	12	13	14	14	15	16	17	17	18	19	19	20	21	22
	> 7 FOR H < 20′ > 10 FOR H ≥ 20′	A-2-4 SOIL	6	6	7	8	8	9	9	10	11	11	12	12	13	14	14	15	16	16	17	18	18	19	20	20	21
		CLASS II,TYPE I OR CLASS III SELECT MATERIAL	6	6	7	7	8	8	9	10	10	11	11	12	12	13	14	15	15	16	16	17	17	18	18	19	20
		CLASS V OR CLASS VI SELECT MATERIAL	6	6	7	7	7	8	8	9	9	10	10	11	12	13	13	14	14	15	15	16	17	17	18	19	19

L – MINIMUM REQUIRED REINFORCEMENT LENGTH (FT)

(FOR ALL REINFORCEMENT TYPES)

WALL HEIGHT (H) + EMBEDMENT (FT)	NUMBER OF REINFORCEMENT LAYERS*
2.5 - 4	3
4 - 5.5	4
5.5 - 7	5
7 - 8.5	6
8.5 - 10	7
10 - 11.5	8
11.5 - 13	9
13 - 14.5	10
14.5 - 16	11
16 - 17.5	12
17.5 - 19	13
19 - 20.5	14
20.5 - 22	15
22 - 23.5	16
23.5 - 25	17
25 - 26.5	18
26.5 - 28	19
28 - 29.5	20

*BASED ON VERTICAL REINFORCEMENT SPACING SHOWN ON SHEET 1.

REINFORCEMENT LAYER NUMBER*	SHORING BACKFILL TYPE IN THE REINFORCED ZONE (SEE NOTE 7 ON SHEET 2)				
	SLOPE CASE		SURCHARGE CASE		
	CLASS II,TYPE I OR CLASS III SELECT MATERIAL	CLASS V SELECT MATERIAL	A-2-4 SOIL	CLASS II,TYPE I OR CLASS III SELECT MATERIAL	CLASS V SELECT MATERIAL
1	2400	2400	2400	2400	2400
2	2400	2400	2400	2400	2400
3	2400	2400	2400	2400	2400
4	2400	2400	2500	2400	2400
5	2500	2400	3000	2400	2400
6	3000	2400	3500	2800	2400
7	3500	2700	4000	3200	2600
8	4000	3100	4500	3600	2900
9	4500	3500	5000	4000	3200
10	5000	3900	5500	4400	3500
11	5500	4300	6000	4800	3800
12	6000	4700	6500	5200	4100
13	6500	5100	7000	5600	4400
14	7000	5400	7500	6000	4700
15	7500	5800	8000	6400	5000
16	8000	6200	8500	6800	5300
17	8500	6600	9000	7200	5600
18	9000	7000	9500	7600	5900
19	9500	7400	10000	8000	6200
20	10000	7800	10500	8400	6500

GEOTEXTILE REINFORCEMENT
ULTIMATE TENSILE STRENGTH (LB/FT)

REINFORCEMENT LAYER NUMBER*	SHORING BACKFILL TYPE IN THE REINFORCED ZONE (SEE NOTE 7 ON SHEET 2)				
	SLOPE CASE		SURCHARGE CASE		
	CLASS II,TYPE I OR CLASS III SELECT MATERIAL	CLASS V OR CLASS VI SELECT MATERIAL	A-2-4 SOIL	CLASS II,TYPE I OR CLASS III SELECT MATERIAL	CLASS V OR CLASS VI SELECT MATERIAL
1	240	200	340	290	240
2	380	310	520	430	350
3	530	420	700	570	460
4	690	550	870	720	570
5	860	690	1050	860	680
6	1030	830	1220	1000	790
7	1200	970	1400	1150	900
8	1370	1110	1580	1290	1010
9	1550	1240	1750	1430	1120
10	1720	1380	1930	1580	1230
11	1890	1520	2100	1720	1340
12	2060	1660	2280	1860	1450
13	2240	1800	2450	2010	1560
14	2410	1940	2630	2150	1670
15	2580	2080	2800	2290	1780
16	2750	2220	2980	2440	1890
17	2930	2360	3160	2580	2000
18	3100	2500	3330	2720	2110
19	3270	2640	3510	2860	2220
20	3440	2780	3690	3000	2330

GEOGRID REINFORCEMENT
SHORT–TERM DESIGN STRENGTH (LB/FT)
(SEE NOTE 10 ON SHEET 2.)

MINIMUM REQUIRED REINFORCEMENT STRENGTH IN MD
(SEE NOTE 9 ON SHEET 2.)
*SEE PARTIAL ELEVATION ON SHEET 1
FOR REINFORCEMENT LAYER NUMBERING.

NORTH CAROLINA
DEPARTMENT OF TRANSPORTATION
DIVISION OF HIGHWAYS

GEOTECHNICAL
ENGINEERING UNIT

STANDARD DETAIL NO. 1801.02

STANDARD
TEMPORARY WALL
SHEET 3 OF 3

DATE: 11-19-13

COMPUTED BY: CJT DATE: 9-17-2014
CHECKED BY: DJC DATE: 5-1-2015

PROJECT REFERENCE NO.	SHEET NO.
R-2915B	3B-1

STATE OF NORTH CAROLINA
DIVISION OF HIGHWAYS

GUARDRAIL SUMMARY

SURVEY LINE	BEG. STA.	END STA.	LOCATION	LENGTH			WARRANT POINT		"N" DIST. FROM E.O.L.	TOTAL SHOUL WIDTH	FLARE LENGTH		W		ANCHORS									IMPACT ATTENUATOR TYPE 350		SINGLE FACED CONCRETE BARRIER	REMOVE EXISTING GUARDRAIL	REMOVE & STOCKPILE EXISTING GUARDRAIL	REMARKS
				STRAIGHT	SHOP CURVED	DOUBLE FACED	APPROACH END	TRAILING END			APPROACH END	TRAILING END	APPROACH END	TRAILING END	TERM. SECTS.	XI	GRAU 350	M-350	AT-1	CAT-1	VI MOD	B-83	B-77	G	NG				
-L-	158+76.00	160+51.00	RT	175.00			158+76.28		8	8	50		1				1			1									
-L-	158+31.70	159+94.20	LT	162.50				158+31.70	8	8	50		1				1												INTERRUPTED FOR GUARDRAIL
-L-	160+25.00	163+75.00	LT	350.00			162+50.00		8	8	50		1				1			1									INTERRUPTED FOR GUARDRAIL
-L-	170+41.00	182+91.00	LT	1250.00				170+45.70	8	8	50		1				1			1									
-L-	183+60.00	197+60.00	LT	1387.5	125.00		197+95.10		8	8			1							1			1						
-L-	189+51.37	198+91.29	LT																								954.52		
-L-	196+27.25	202+78.04	LT																								644.23		
-L-	196+51.84	198+01.84	MED. LT	150.00				198+01.84	2	2		50		1			1						1						
-L-	196+29.20	198+04.20	MED. RT	175.00			198+04.20		2	2	50		1				1						1						
-L-	195+55.25	197+92.75	RT	237.50			196+97.00	198+08.61	8	8	50		1				1						1						
-L-	199+19.00	199+96.00	LT	75.00	87.50		199+16.35		8	8									1				1						
-L-	199+14.5	200+89.50	MED. LT	175.00			199+23.81		2	2	50		1				1						1						
-L-	199+18.00	200+68.00	MED. RT	150.00				199+28.17	2	2		50		1			1						1						
-L-	199+39.50	200+42.61	RT	93.75			199+39.51		2	2										1			1						
-L-	215+56.75	219+38.00	LT	381.25			218+10.00	215+59.94	8	8	50		1				1			1									
-L-	216+20.00	219+20.00	RT	300.00			217+45.55		8	8	50	100	1	2			1			1			1						
-L-	221+63.00	227+39.50	RT	587.50			221+63.00		8	8	100		2										1						INTERRUPTED FOR DRIVE
-L-	227+74.14	233+31.55	LT																								577.26		
-L-	227+78.75	233+28.75	RT	550.00				233+09.99	8	8	50		1				1						1						INTERRUPTED FOR DRIVE
-L-	231+69.38	233+44.38	MED. RT	175.00			233+44.38		2	2	50		1				1						1						
-L-	232+90.62	233+65.62	MED. LT	175.00				233+65.62	2	2		50		1			1					1							
-L-	234+66.20	238+95.27	LT																								429.91		
-L-	234+97.69	239+00.69	LT																								403.49		
-L-	235+23.80	241+48.80	LT	662.50			241+52.83	235+23.80	8	8												1	1						
-L-	234+69.04	236+69.04	MED. LT	206.25				234+94.04	2	2	50		1				1					1							
-L-	234+76.48	236+70.23	MED. RT	193.75			234+81.84		2	2		50		1			1						1						
-L-	234+42.50	238+30.00	RT	387.50			234+47.45		8	8										1			1						
-L-	238+70.00	241+20.00	RT	250.00				241+29.80	8	8							1						1						
-L-	239+79.28	241+41.78	MED LT	175.00				241+48.69	2	2		50		1			1						1						
-L-	239+41.25	241+35.00	MED RT	193.75			241+41.91		2	2	50		1				1						1						
-L-	244+11.95	252+18.20	LT	793.75	125.00		251+62.54	243+88.01	8	8	50		1				1						1						
-L-	243+93.06	245+80.56	MED LT	187.50				243+75.90	2	2													1		1				
-L-	243+69.12	245+56.62	MED RT	187.50			243+69.12		2	2													1						
-L-	243+80.94	251+18.44	RT	737.5			243+57.01	251+20.00	8	8										1			1						
-DR3-	19+12.63	19+18.74	LT	12.5											2														GUARDRAIL FOR TRUCK TURNAROUND AT END OF -DR3-
			SUBTOTAL	10537.50	337.50										2		20		1	9		3	22		1		3009.41		
		ANCHOR UNIT DEDUCTION																											
		GRAU350: 20 @ 50.00 = 1000.00																											
		CAT-1: 9 @ 6.25 = 56.25																											
		AT-1: 1 @ 6.25 = 6.25																											
		TYPE B-77: 22 @ 18.75 = 412.50																											
		TYPE B-83: 3 @ 25.00 = 75.00																											
			TOTAL	8987.50	337.50										2		20		1	9		3	22		1		3009.41		
			SAY	8987.50	337.50																						3010.00		
		ADDITIONAL GUARDRAIL POSTS = 25																											
TEMPORARY GUARDRAIL																													
																	2												TEMPORARY GUARDRAIL FOR TRAFFIC CONTROL
-L-	159+00+/-	164+00+/-	LT	500.00													2												TEMPORARY GUARDRAIL FOR TRAFFIC CONTROL
-L-	215+00+/-	219+50+/-	LT	450.00																									
																	4												TEMPORARY GUARDRAIL ANCHOR UNIT TYPE GRAU350
			SUBTOTAL	950.00																									
		ANCHOR UNIT DEDUTION																											
		TEMP GRAU350: 4 @ 50.00 = 200.00																											
			TOTAL	750.00													4												
			SAY	750.00																									

5/28/99

6/26/2015 8:00:17 AM
R:\Roadway\Proj\R2915B_SUM_3B-1.dgn
USER: TH | MANE-1

STATE OF NORTH CAROLINA
DIVISION OF HIGHWAYS

SUMMARY OF PAVEMENT REMOVAL

SURVEY LINE	STATION	STATION	LOCATION LT/RT/CL	YD³
-Y9-	15+75.00	16+15.00	LT	105
-L-	198+40.00	199+45.00	LT	425
TEMPORARY PAVEMENT				
-L-	169+00.00	171+00.00	LT	413.22
-L-	174+00.00	174+00.00	LT & RT	91.28
-L-	200+77.00	200+77.00	LT & RT	63.67
-L-	222+10.00	222+10.00	LT & RT	137.13
-L-	229+80.00	229+80.00	LT & RT	80.51
			TOTAL:	1,315.81
			SAY:	1,320

SUMMARY OF BREAKING OF EXISTING ASPHALT PAVEMENT

SURVEY LINE	STATION	STATION	LOCATION LT/RT/CL	YD³
-L-	159+75	160+75	LT	234
-L-	196+00	197+97	LT	502
-L-	199+14	204+00	LT	1319
-L-	244+02	251+75	LT	2576
-Y10-	13+75	14+52	CL	117
-Y11-	11+50	12+42	CL	359
-Y12-	14+10	14+80	CL	307
			TOTAL:	5,414
			SAY:	5,420

SUMMARY OF SHOULDER BERM GUTTER

SURVEY LINE	STATION	STATION	SIDE	LENGTH
-L-	160+25.00	162+64.75	LT	239
-L-	170+45.25	182+77.75	LT	1,199
-L-	197+00.52	197+80.16	RT	77
-L-	199+66.01	200+08.02	RT	41
-L-	216+67.17	219+22.00	RT	253
-L-	232+05.00	232+85.01	RT	83
-L-	234+68.06	238+30.00	RT	362
-L-	238+70.00	240+98.72	RT	229
-L-	235+39.28	241+28.06	LT	589
-L-	244+06.77	250+70.00	RT	663
-L-	244+36.11	254+94.84	LT	829
			TOTAL:	4,564
			SAY:	4,570

SUMMARY OF WOVEN WIRE FENCE & BARBED WIRE FENCE

STATION TO STATION	SIDE	A FABRIC L.F.	B END BRACE	C CORNER BRACE	D LINE BRACE	E 4" POSTS	F 5" POSTS
-L- STA 163+11.54 TO STA 170+00.00	LT.	724.43	2		3	45	13
-L- STA 170+60.00 TO STA 183+23.21	LT.	1,235.52	2	4	4	73	28
-L- STA 183+83.21 TO STA 197+05.00	LT.	1,435.95	2	2	5	89	25
-L- STA 201+25.00 TO STA 218+67.00	LT.	2,222.86	2	8	7	132	49
-L- STA 219+27.00 TO STA 221+90.61	LT.	263.04	2	1	1	13	10
-L- STA 222+38.25 TO STA 229+82.79	LT.	687.65	2	2	3	39	19
-L- STA 230+37.46 TO STA 234+55.00	LT.	427.25	2	1	2	23	13
-L- STA 235+45.25 TO STA 242+25.99	LT.	688.19	2	1	3	40	16
-L- STA 243+79.06 TO -DET STA 254+90.79	LT.	1,146.41	2	6	4	63	34
-DET- STA 256+53.62 TO STA 261+05.51	LT.	656.67	2	2	3	37	19
-L- STA 163+51.00 TO STA 166+70.00	RT.	578.49	2	2	2	33	16
-L- STA 159+19.70 TO STA 162+91.01	RT.	295.99	2		1	17	7
-L- STA 167+30.00 TO STA 174+07.56	RT.	908.81	2	4	3	51	25
-L- STA 178+46.44 TO STA 186+68.00	RT.	900.39	2	5	3	49	28
-L- STA 188+47.14 TO STA 198+20.28	RT.	941.20	2	1	3	59	16
-L- STA 199+29.30 TO STA 204+60.00	RT.	539.38	2	1	2	31	13
-L- STA 205+20.00 TO STA 209+70.00	RT.	439.29	2		2	26	10
-L- STA 210+30.00 TO STA 227+12.00	RT.	1,741.67	2	5	6	104	37
-L- STA 227+72.00 TO STA 233+01.92	RT.	599.15	2	3	2	32	19
-L- STA 234+20.00 TO STA 236+00.00	RT.	216.35	2	1	1	10	10
-L- STA 236+60.00 TO STA 241+37.66	RT.	477.66	2		2	29	10
-L- STA 242+51.57 TO STA 247+40.00	RT.	488.52	2		2	29	10
-L- STA 248+00.00 TO STA 250+66.74	RT.	309.99	2	2	1	15	13
-L- STA 251+22.90 TO STA 258+00.78	RT.	493.61	2	4	2	23	22
-L- STA 259+50.41 TO STA 264+32.90	RT.	609.49	2	3	2	33	19
	TOTAL:	19,027.96			TOTAL:	1097	481
	SAY:	19,030			SAY:	1100	485
ADDITIONAL BARBED WIRE (CONTINGENCY)		1,000					
TEMP. 4 STRAND BARBED WIRE FENCE (CONTINGENCY)							
-L- STA 231+00.00 TO STA 242+00.00	LT.	1,100					
-L- STA 235+00.00 TO STA 241+00.00	RT.	600					
-L- STA 244+00.00 TO STA 249+00.00	LT.	500					
-L- STA 245+00.00 TO STA 250+00.00	RT.	500					
	TOTAL:	2,700					
	SAY:	2,700					

5/28/99
6/26/2015 8:10:22 AM
C:\Projects\2915B_Rdy_SUM_3B-2.dgn
USER: thill

STATE OF NORTH CAROLINA
DIVISION OF HIGHWAYS

SUMMARY OF EARTHWORK

IN CUBIC YARDS

LOCATION	UNCLASSIFIED EXCAVATION	UNDERCUT	EMBANKMENT +%	BORROW	WASTE
PHASE I					
-L- RT 158+31.70 TO 188+00.00	426,032		5,262		420,770
-L- RT 188+00.00 TO 198+02.96 (BRIDGE)	102,181		2,626		99,555
-L- RT 199+35.84 (BRIDGE) TO 229+00.00	8,596		37,116	28,520	
-L- RT 229+00.00 TO 233+40.93(BRIDGE)			12,259	12,259	
SUBTOTAL	536,809		57,263	40,779	520,326
-L- RT 234+74.46(BRIDGE) TO 241+33.23(BRIDGE)			14,429	14,429	
-L- RT 243+93.23(BRIDGE) TO 251+72.02	26		41,662	41,636	
-Y9- 10+35.50 TO 16+90.08	76,720		6		73,714
-Y10- 12+75.00 TO 17+62.15	11,545		902		10,643
SUBTOTAL	85,291		56,999	56,065	84,358
-Y13- 11+50.00 TO 12+86.60	95		16		79
-Y13A- 10+21.98 TO 12+77.00	4,461				4,461
-DR1- 10+35.50 TO 15+43.00	31,426				31,426
-DR2- 10+35.50 TO 14+90.01	31,214				31,214
SUBTOTAL	67,196		16		67,179
-DR3- 10+35.50 TO 19+95.00	95,398		216		95,182
-DR3B- 10+06.00 TO 12+35.00	5,203		1		5,202
-DR5- 10+50.00 TO 11+55.00	423				423
-DET- RT 251+72.02 TO 261+05.51	42,918		421		42,497
SUBTOTAL	143,942		638		143,304
PHASE II					
-L- LT 158+31.70 TO 188+00.00	15,818		16,315	497	
-L- LT 188+00.00 TO 197+96.58 (BRIDGE)	12,570		1,588		10,982
-L- LT 199+23.81 (BRIDGE) TO 229+00.00	104,035		12,831		91,204
-L- LT 229+00.00 TO 233+64.04(BRIDGE)	272		713	441	
SUBTOTAL	132,695		31,447	938	102,186
-L- LT 234+97.45 (BRIDGE) TO 241+41.61 (BRIDGE)	272		1,528	1,256	
-L- LT 244+01.61 (BRIDGE) TO 251+72.02			20,901	20,901	
-Y11- 10+55.00 TO 12+65.47	468		576	108	
-Y12- 12+85.00 TO 14+87.00	80		437	357	
-DET- LT 251+72.02 TO 261+05.51	7,849		1,884		5,965
SUBTOTAL	8,669		25,326	22,623	5,965
-DR4- 10+35.50 TO 13+24.54	7		2,615	2,608	
SUBTOTAL	7		2,615	2,608	
TOTAL	974,609		174,305	123,013	923,317
LOSS DUE TO CLEARING & GRUBBING	-20,000				-20,000
ROCK WASTE TO REPLACE BORROW				-81,179	-81,179
ADJUST FOR ROCK WASTE			-16,236	-16,236	
ELIMINATE EARTH SHRINKAGE FACTOR FOR ROCK			-14,612	-14,612	
WASTE IN LIEU OF BORROW				-10,985	-10,985
PROJECT TOTAL	954,609		143,457		811,152
EST. 5% TO REPLACE TOP SOIL ON BORROW PIT					
GRAND TOTAL	954,609		143,457		811,152
SAY	954,700				
EST. DDE = 2820 CUBIC YARDS					
SHOULDER BORROW = 2,481 CUBIC YARDS					

NOTE:	Earthwork quantities are calculated by the Roadway Design Unit. These earthwork quantities are based in part on subsurface data provided by the Geotechnical Engineering Unit.
NOTE:	Quantities are approximate only. The Resident Engineer will recross-section the work accurately when the project is staked out. These cross-section notes will be used in computing the final quantities for which the contractor will be paid.

CONTINGENCY ITEMS: GEOTECHNICAL REPORT - DESIGN AND CONSTRUCTION RECOMMENDATIONS
DATED: SEPTEMBER 27, 2013

UNDERCUT CONTINGENCY = 200 CY
SHALLOW UNDERCUT CONTINGENCY = 500 CY
CLASS IV SUBGRADE STABILIZATION CONTINGENCY = 200 TONS
SELECT GRANULAR CONTINGENCY = 200 CY
PAVEMENT STRUCTURE VOLUME = 14,449 CY

5/28/99
7/10/2015 10:33:34 AM
its:r:o:\R2915B_Rdy_SUM_3B-3.dgn

DL-2KYBDZ1

COMPUTED BY:	BNE	DATE:	9/18/2014
CHECKED BY:	CJT	DATE:	4/22/2015

NORTH CAROLINA DEPARTMENT OF TRANSPORTATION
DIVISION OF HIGHWAYS

PROJECT NO.	SHEET NO.
R-2915B	3D-1

Note: Invert Elevations indicated are for Bid Purposes only and shall not be used for project construction stakeout.
See "Standard Specifications For Roads and Structures, Section 300-5".

LIST OF PIPES, ENDWALLS, ETC. (FOR PIPES 48 INCHES & UNDER)

ABBREVIATIONS
- C.A.A. — CORRUGATED ALUMINIUM ALLOY
- C.B. — CATCH BASIN
- C.S. — CORRUGATED STEEL
- D.I. — DROP INLET
- G.D.I. — GRATED DROP INLET
- H.D.P.E. — HIGH DENSITY POLYETHYLENE
- J.B. — JUNCTION BOX
- M.H. — MANHOLE
- N.S. — NARROW SLOT
- P.V.C. — POLYVINYL CHLORIDE
- R.C. — REINFORCED CONCRETE
- T.B.D.I. — TRAFFIC BEARING DROP INLET
- T.B.J.B. — TRAFFIC BEARING JUNCTION BOX
- W.S. — WIDE SLOT

LINE & STATION / SIZE / THICKNESS OR GAUGE	OFFSET	STRUCTURE NUMBER FROM	TO	TOP ELEVATION FT.	INVERT ELEVATION FT.	INVERT ELEVATION FT.	MINIMUM REQUIRED SLOPE %	Side Drain Pipe (RCP, CSP, CAAP, HDPE, or PVC) 15	18	24	30	36	42	48	DO NOT USE RCP	DO NOT USE CSP	DO NOT USE CAAP	DO NOT USE HDPE	DO NOT USE PVC	C. S. PIPE (SE: SHOP ELONGATED) 12 .064	15 .064	18 .064	24 .064	30 .079	36 .079	42 .109	48 .109	R. C. PIPE CLASS III 12	15	18	24	30	36	42	48	R. C. PIPE CLASS IV 12	15	18	24	30	36	42	48	30" WELDED STEEL PIPE 0.469" THICK, GRADE B IN SOIL	30" WELDED STEEL PIPE 0.469" THICK, GRADE B NOT IN SOIL	ENDWALLS STD. 838.01 OR STD. 838.11 (UNLESS NOTED OTHERWISE) CY	REINFORCED ENDWALLS CY	DRAINAGE STRUCTURE MASONRY CY	QUANTITIES FOR DRAINAGE STRUCTURES (NOTE: TOTAL LIN. FT. FOR PAY QUANTITY SHALL BE A + (1.3 X B)) 0' THRU 5' EACH	A 5' THRU 10' LIN. FT.	B 10' AND ABOVE LIN. FT.	C.B. STD. 840.01 OR STD. 840.02	FRAME, GRATES, AND HOOD STD. 840.03 GRATE TYPE E	F	G		CONCRETE TRANSITIONAL SECTION D.I. STD. 852.04 OR STD. 852.06	C.B. STD. 852.05	D.I. STD. 840.14 OR STD. 840.15	D.I. FRAME AND GRATES STD. 840.16	G.D.I. TYPE "A" STD. 840.17 OR STD. 840.26	G.D.I. TYPE "B" STD. 840.18 OR STD. 840.27	G.D.I. (W.S. FLAT) FRAME W/ 2 GRATES STD.840.20	G.D.I. (W.S. SAG) FRAME W/ GRATE STD. 840.22	G.D.I. (W.S. SAG) FRAME W/ 2 GRATES STD. 840.22	G.D.I. (N.S. SAG) FRAME W/ 2 GRATES STD. 840.24	T.B.D.I. STD. 840.35	SPRING BOX STD. 840.41	SPECIAL EXTRA DEPTH 36" JUNCTION BOX	TRAFFIC BEARING JUNCTION BOX 840.34	M.H. FRAME AND COVER STD. 840.54	15" SIDE DRAIN PIPE ELBOW	18" SIDE DRAIN PIPE ELBOW	24" SIDE DRAIN PIPE ELBOW	30" SIDE DRAIN PIPE ELBOW	36" SIDE DRAIN PIPE ELBOW	BERM DITCH OUTLET STD. 850.10	BERM DITCH OUTLET STD. 850.11	BERM DITCH OUTLET FOR 36" PIPE, SEE SHT.2C-5	PREFORMED SCOUR HOLE (PER EACH)	FLOWABLE FILL CY	PIPE COLLAR STD. 840.72 CY	PIPE REMOVAL LIN. FT.	REMARKS
L 160+50	8 RT	0401		2905.7																																													1								1		1	1																										
		0401	0404		2902.5	2901.1																															48																																																	
L 162+60	42 LT	0402		2904.5																																													1													1	1																							
		0402	0403		2901.7	2901.2																															156																																																	
L 161+00	42 LT	0403		2904.4																																													1													1	1																							
		0403	0404		2901.2	2901.1																															52																																																	
L 161+00	8 RT	0404		2905.5																																													1								1		1	1																										
		0404	0405		2901.1	2894.1																															84																																																30	REM. EX. 12" CMP (LOCATED ON -DR1-)
L 163+65	12 LT	0406		2904.5																																													1														1				1																		
		0406	0501		2901.8	2901.1																															132																																																	
L 163+25	59 RT	0407		2900.7																																													1													1			1																				
		0407	0505		2898.0	2895.9		216																																																																																	
L 165+00	12 LT	0501		2905.4																																													1														1				1																		
		0501	0502		2901.1	2891.0																															112																																																	
L 165+00	120 LT	0502		2891.0																																																																														1				
L 165+45	147 RT	0503		2934.0																																																																										1						
		0503	0505		2934.0	2895.1				88					X																																																												1									112	REM. EX. 12" RCP
L 167+20	58 RT	0504		2902.2																																													1													1			1																				
		0504	0505		2899.5	2895.9	0.4	156																																																																																
L 165+50	61 RT	0505		2899.9																																													1	0.3											1			1	1																			
		0505	0506		2894.6	2894.0																																							72	72																																												69	REM. EX. 24" RCP, EX. 18" RCP
L 170+50	11 RT	0507		2910.3																																													1														1				1																		
		0507	0508		2907.6	2906.6																															52																																																	
L 170+50	42 LT	0508		2909.3																																													1													1	1																							
		0508	0510		2906.6	2906.3																															96																																																	
L 171+50	12 RT	0509		2911.4																																													1														1				1																		
		0509	0510		2908.7	2906.3																															52																																																	
L 171+50	42 LT	0510		2909.5																																													1													1	1																							
		0510	0511		2906.3	2889.3	1.6	44							X																																																											2												
L 171+50	86 LT	0511		2889.3																																																																													1				
L 171+50	103 RT	0512		2923.0																																																																										1						
		0512	0513		2923.0	2905.1	0.5			48					X																																																												1										
L 171+50	59 RT	0513		2909.9																																													1												1				1																				
		0513	0517		2905.1	2904.4				260																																																																												
L 175+00	66 RT	0514		2914.4																																													1													1			1																			49	REM. EX. 18" CMP
		0514	0517		2911.7	2905.6																									104																																																											180	REM. EX. 24" RCMP, 15"CMP
Y9 13+32.5	60 RT	0515		2969.5																																																																										1						
		0515	0516		2969.5	2940.9	0.5			60					X																																																												1										
Y9 13+00	20 RT	0516		2945.7																																													1												1					1																			
		0516	0517		2940.9	2904.4				276																																																																												
L 174+00	58 RT	0517		2913.5																																													1	4.1											1				1																				
		0517	0518		2904.4	2888.0	1.7																																						70	70																																												117	REM. EX. 24" RCP, EX. 18" CMP
L 172+44	8 RT	0519		2904.0																																													1																			1																	
		0519	0520		2902.0	2890.0																								88																																																												134	REM. EX. 30" RCP, 24" RCP, DI
DR2 14+42		0521			2989.5	2986.5			36																																																																															20	REM. EX. 12" CMP
Y9 16+28		0601			2989.0	2965.0	1.1		100						X			X	X																																																																		109	REM. TWO EX. 18" CMPs
L 178+50	155 RT	0602		2954.0																																																																										1						
		0602	0603		2954.0	2910.6				96					X																																																											1										
L 178+50	59 RT	0603		2914.1																																													1													1			1																				
		0603	0604		2910.6	2884.5	0.4																152																																																																			
SHEET TOTALS								416	136	828													152					88	104								784							142	142				19	4.4							2		2	2	4	8	8	1	7	1	4	1				2		4				4		2			820	

DL-2KYBDZ1

COMPUTED BY: BNE DATE: 9/18/2014

CHECKED BY: CJT DATE: 4/22/2015

PROJECT NO.	SHEET NO.
R-2915B	3D-2

NORTH CAROLINA DEPARTMENT OF TRANSPORTATION
DIVISION OF HIGHWAYS

**Note: Invert Elevations indicated are for Bid Purposes only and shall not be used for project construction stakeout.
See "Standard Specifications For Roads and Structures, Section 300-5".**

LIST OF PIPES, ENDWALLS, ETC. (FOR PIPES 48 INCHES & UNDER)

LINE & STATION	OFFSET	STRUCTURE NUMBER FROM	STRUCTURE NUMBER TO	TOP ELEVATION FT.	INVERT ELEVATION FT.	INVERT ELEVATION FT.	MINIMUM REQUIRED SLOPE %	Side Drain Pipe (RCP, CSP, CAAP, HDPE, or PVC) 15	18	24	30	36	42	48	DO NOT USE RCP	DO NOT USE CSP	DO NOT USE CAAP	DO NOT USE HDPE	DO NOT USE PVC
L 179+70	3 RT	0605		2913.1															
		0605	0606		2910.4	2908.7													
L 180+50	4 LT	0606		2911.9															
		0606	0607		2908.7	2908.3													
L 180+50	42 LT	0607		2911.1															
		0607	0609		2908.3	2902.5													
L 182+70	59 RT	0608		2905.6															
		0608	0609		2902.6	2902.3													
L 182+70	42 LT	0609		2908.3															
		0609	0610		2902.3	2888.0	2.4		60						X				
L 182+70	100 LT	0610		2888.0															
L 185+85	8 RT	0611		2903.8															
		0611	0612		2900.6	2884.9													
DR3 10+85	38 RT	0613		2900.0															
		0613	0616		2900.0	2888.3						24			X				
L 187+90	58 RT	0614		2894.5															
		0614	0616		2891.8	2890.1		28											
DR3 11+30	15 RT	0615		2893.1															
		0615	0616		2890.4	2890.1													
DR3 10+84	15 RT	0616		2893.0															
		0616	0617		2888.3	2887.7													
DR3 10+84	15 LT	0617		2892.2															
		0617	0618		2887.7	2887.5	0.4												
L 188+77	58 RT	0618		2892.1															
		0618	0619		2887.5	2887.1	0.3												
L 189+32	62 LT	0619		2894.0															
		0619	0620		2878.7	2878.5													
L 189+30	10 LT	0621		2896.7															
		0621	0701		2894.0	2886.6													
L 192+00	6 RT	0701		2889.8															
		0701	0704		2886.6	2882.1													
DR3 14+45	75 RT	0702		2941.0															
		0702	0703		2941.0	2909.5	1.0		60						X				
DR3 14+45	15 RT	0703		2912.5															
		0703	0704		2909.5	2881.9	1.1		104						X				
L 192+00	60 RT	0704		2884.9															
		0704	0706		2881.9	2876.0	0.9		324										
L 195+45	4 RT	0705		2885.4															
		0705	0706		2882.2	2876.3													
L 195+45	61 RT	0706		2880.3															
		0706	0707		2875.5	2873.5	0.4			144									
L 197+00	70 RT	0707		2878.3															
		0707	0708		2873.5	2869.5	0.4			64									
L 197+70	10 LT	0710		2885.4															
		0710	0711		2882.7	2879.6													
L 197+75	42 RT	0711		2882.3															
		0711	0712		2879.6	2869.3		32							X				
L 200+00	42 RT	0713		2881.6															
		0713	0714		2878.8	2872.7		24							X				
L 200+00	64 RT	0714		2872.7															
SHEET TOTALS								84	548	208		24							

STRUCTURE NUMBER FROM	TO	C. S. PIPE (SE: SHOP ELONGATED) 12 (.064)	15 (.064)	18 (.064)	24 (.064)	30 (.079)	36 (.079)	42 (.109)	48 (.109)	R. C. PIPE CLASS III 12	15	18	24	30	36	42	48	R. C. PIPE CLASS IV 12	15	18	24	30	36	42	48	30" WELDED STEEL PIPE 0.469" THICK, GRADE B IN SOIL	30" WELDED STEEL PIPE 0.469" THICK, GRADE B NOT IN SOIL	ENDWALLS STD. 838.01 OR STD. 838.11 (UNLESS NOTED OTHERWISE) CY	REINFORCED ENDWALLS CY	DRAINAGE STRUCTURE MASONRY CY
0605																														
0605	0606																		80											
0606																														
0606	0607																		40											
0607																														
0607	0609										220																			
0608																														
0608	0609											100																		
0609																														
0609	0610																													
0610																														
0611																														
0611	0612		104																											
0613																														
0613	0616																													
0614																														
0614	0616																													
0615																														
0615	0616																		52											
0616																														
0616	0617																					28								
0617																														
0617	0618														52															
0618																														
0618	0619														132															
0619																														
0619	0620														16															
0621																														
0621	0701																		268											
0701																														
0701	0704																		52											
0702																														
0702	0703																													
0703																														
0703	0704																													
0704																														
0704	0706																													
0705																														
0705	0706																		56											
0706																														
0706	0707																													
0707																														
0707	0708																													
0710																														
0710	0711																		52											
0711																														
0711	0712																													
0713																														
0713	0714																													
0714																														
SHEET TOTALS			104								220	100			200				600			28								

STRUCTURE NUMBER FROM	TO	QUANTITIES FOR DRAINAGE STRUCTURES (NOTE: TOTAL LIN. FT. FOR PAY QUANTITY SHALL BE A + (1.3 X B)) 0' THRU 5' EACH	A 5' THRU 10' LIN. FT.	B 10' AND ABOVE LIN. FT.	C.B. STD. 840.01 OR STD. 840.02	FRAME, GRATES, AND HOOD STD. 840.03 GRATE TYPE E	F	G		CONCRETE TRANSITIONAL SECTION D.I. STD. 852.04 OR STD. 852.06	C.B. STD. 852.05	D.I. STD. 840.14 OR STD. 840.15	D.I. FRAME AND GRATES STD. 840.16	G.D.I. TYPE "A" STD. 840.17 OR STD. 840.26	G.D.I. TYPE "B" STD. 840.18 OR STD. 840.27	G.D.I. (W.S. FLAT) FRAME W/ 2 GRATES STD.840.20	G.D.I. (W.S. SAG) FRAME W/ GRATE STD. 840.22	G.D.I. (W.S. SAG) FRAME W/ 2 GRATES STD. 840.22	G.D.I. (N.S. SAG) FRAME W/ 2 GRATES STD. 840.24	T.B.D.I. STD. 840.35	SPRING BOX STD. 840.41	SPECIAL EXTRA DEPTH 36" JUNCTION BOX	TRAFFIC BEARING JUNCTION BOX 840.34	M.H. FRAME AND COVER STD. 840.54	15" SIDE DRAIN PIPE ELBOW	18" SIDE DRAIN PIPE ELBOW	24" SIDE DRAIN PIPE ELBOW	30" SIDE DRAIN PIPE ELBOW	36" SIDE DRAIN PIPE ELBOW	BERM DITCH OUTLET STD. 850.10	BERM DITCH OUTLET STD. 850.11	BERM DITCH OUTLET FOR 36" PIPE, SEE SHT.2C-5	PREFORMED SCOUR HOLE (PER EACH)	FLOWABLE FILL CY	PIPE COLLAR STD. 840.72 CY	PIPE REMOVAL LIN. FT.	REMARKS
0605		1														1				1																	
0605	0606																																				
0606		1								1		1	1																								
0606	0607																																				
0607		1													1	1																					
0607	0609																																				
0608		1													1			1																			
0608	0609																																			37	REM. EX. 18" RCP
0609		1	1.0												1	1																					
0609	0610																									2											
0610																																	1				
0611		1								1		1	1																								
0611	0612																								1											61	REM. EX. 18" RCP
0613																																1					
0613	0616																												1							61	REM. EX.36" CMP
0614		1													1				1																		
0614	0616																																				
0615		1													1				1																		
0615	0616																																				
0616		1													1				1																		
0616	0617																																				
0617		1													1				1																		
0617	0618																																				
0618		1													1			1																			
0618	0619																																		0.764	83	REM. EX. 18" CMP, TEMP. PIPE COLLAR SEE SHT. TMP-6
0619		1	5.0	5.3																		1		1													SPECIAL DETAIL, SEE SHEET 2C-6
0619	0620																																				
0621		1														1				1																	
0621	0701																																	4			FILL AND PLUG EX. 18" RCP
0701		1								1		1	1																								
0701	0704																																				
0702																														1							
0702	0703																									1											
0703		1													1				1																		
0703	0704																									2											
0704		1													1			1																			
0704	0706																																				
0705		1								1		1	1																								
0705	0706																																				
0706		1												1				1																			
0706	0707																																				
0707		1												1				1																			
0707	0708																																				
0710		1														1				1																	
0710	0711																																				
0711		1													1	1																					
0711	0712																							2													
0713		1													1	1																					
0713	0714																							1													
0714																																1					
SHEET TOTALS		22	6.0	5.3						4		4	4	2	12	7		5	5	3		1		1	4	5			1	1		1	2	4	0.764	242	

ABBREVIATIONS

C.A.A.	CORRUGATED ALUMINIUM ALLOY
C.B.	CATCH BASIN
C.S.	CORRUGATED STEEL
D.I.	DROP INLET
G.D.I.	GRATED DROP INLET
H.D.P.E.	HIGH DENSITY POLYETHYLENE
J.B.	JUNCTION BOX
M.H.	MANHOLE
N.S.	NARROW SLOT
P.V.C.	POLYVINYL CHLORIDE
R.C.	REINFORCED CONCRETE
T.B.D.I.	TRAFFIC BEARING DROP INLET
T.B.J.B.	TRAFFIC BEARING JUNCTION BOX
W.S.	WIDE SLOT

DL-2KYBDZ1

COMPUTED BY:	BNE	DATE:	9/18/2014
CHECKED BY:	CJT	DATE:	4/22/2015

PROJECT NO.	SHEET NO.
R-2915B	3D-3

NORTH CAROLINA DEPARTMENT OF TRANSPORTATION
DIVISION OF HIGHWAYS

Note: Invert Elevations indicated are for Bid Purposes only and shall not be used for project construction stakeout.
See "Standard Specifications For Roads and Structures, Section 300-5".

LIST OF PIPES, ENDWALLS, ETC. (FOR PIPES 48 INCHES & UNDER)

LINE & STATION	OFFSET	STRUCTURE NUMBER FROM	STRUCTURE NUMBER TO	TOP ELEVATION FT.	INVERT ELEVATION FT.	INVERT ELEVATION FT.	MINIMUM REQUIRED SLOPE %	Side Drain Pipe (RCP, CSP, CAAP, HDPE, or PVC) 15	18	24	30	36	42	48	DO NOT USE RCP	DO NOT USE CSP	DO NOT USE CAAP	DO NOT USE HDPE	DO NOT USE PVC
Y10 13+26		0715			2878.0	2874.2													
Y10 15+84	50 LT	0716		2896.0															
		0716	0718		2896.0	2879.4	0.8			28					X				
Y10 15+00	23 LT	0717		2882.4															
		0717	0718		2879.7	2879.4		84											
Y10 15+84	23 LT	0718		2886.8															
		0718	0719		2879.4	2879.0													
L 201+50	12 LT	0720		2883.8															
		0720	0721		2881.0	2879.6													
L 201+50	59 LT	0721		2882.4															
		0721	0801		2879.6	2876.4		252											
DR3 19+69		0722						48							X				
L 204+00	59 LT	0801		2879.2															
		0801	0802		2876.4	2876.3													
L 204+00	11 LT	0802		2880.6															
		0802	0803		2876.3	2870.8	0.4												
L 204+00	74 RT	0803		2870.8															
L 206+50	58 LT	0804		2876.6															
		0804	0805		2873.9	2873.7													
L 206+50	11 LT	0805		2878.1															
		0805	0806		2873.7	2868.7	0.3												
L 206+50	74 RT	0806		2868.7															
L 209+23	82 LT	0807		2877.0															
		0807	0809		2877.0	2870.2	0.5			20					X				
L 210+06	64 LT	0808		2874.0															
		0808	0809		2871.3	2871.0		84											
L 209+23	61 LT	0809		2874.5															
		0809	0810		2870.2	2868.4	0.4												
L 211+27	58 LT	0811		2874.5															
		0811	0813		2871.8	2871.6													
L 210+50	8 LT	0812		2875.9															
		0812	0813		2872.8	2871.6													
L 211+27	8 LT	0813		2874.8															
		0813	0814		2871.6	2867.4	0.4												
L 211+27	74 RT	0814		2867.4															
L 213+45	8 RT	0815		2875.0															
		0815	0816		2871.8	2868.3													
L 216+75	4 RT	0901		2872.8															
		0901	0906		2869.6	2867.9													
L 218+07	2 RT	0902		2872.4															
		0902	0904		2869.3	2868.5													
L 219+00	42 RT	0903		2871.8															
		0903	0904		2869.0	2868.5													
L 218+07	42 RT	0904		2871.3															
		0904	0905		2868.5	2868.1													
L 217+40	42 RT	0905		2870.9															
		0905	0906		2868.1	2867.9													
L 216+75	42 RT	0906		2871.2															
		0906	0907		2867.9	2862.7	1.9	32							X				
L 216+75	71 RT	0907		2862.7															
SHEET TOTALS								500		48									

FROM	TO	C. S. PIPE (SE: SHOP ELONGATED) 12 (.064)	15 (.064)	18 (.064)	24 (.064)	30 (.079)	36 (.079)	42 (.109)	48 (.109)	R. C. PIPE CLASS III 12	15	18	24	30	36	42	48	R. C. PIPE CLASS IV 12	15	18	24	30	36	42	48	30" WELDED STEEL PIPE 0.469" THICK, GRADE B IN SOIL	30" WELDED STEEL PIPE 0.469" THICK, GRADE B NOT IN SOIL	ENDWALLS STD. 838.01 OR STD. 838.11 (UNLESS NOTED OTHERWISE) CY	REINFORCED ENDWALLS CY	DRAINAGE STRUCTURE MASONRY CY
0715																					60									
0716																														
0716	0718																													
0717																														
0717	0718																													
0718																														
0718	0719												76																	
0720																														
0720	0721																		48											
0721																														
0721	0801																													
0722																														
0801																														
0801	0802																		48											
0802																														
0802	0803																		84											
0803																														
0804																														
0804	0805																		48											
0805																														
0805	0806																		84											
0806																														
0807																														
0807	0809																													
0808																														
0808	0809																													
0809																														
0809	0810																				136									
0811																														
0811	0813																		48											
0812																														
0812	0813																		76											
0813																														
0813	0814																		84											
0814																														
0815																														
0815	0816																		68											
0901																														
0901	0906																		40											
0902																														
0902	0904																		40											
0903																														
0903	0904																		96											
0904																														
0904	0905																		68											
0905																														
0905	0906																		68											
0906																														
0906	0907																													
0907																														
SHEET TOTALS													76						900		196									

FROM	TO	QUANTITIES FOR DRAINAGE STRUCTURES (NOTE: TOTAL LIN. FT. FOR PAY QUANTITY SHALL BE A + (1.3 X B)) 0' THRU 5' EACH	A: 5' THRU 10' LIN. FT.	B: 10' AND ABOVE LIN. FT.	C.B. STD. 840.01 OR STD. 840.02	FRAME, GRATES, AND HOOD STD. 840.03 GRATE TYPE E	F	G		CONCRETE TRANSITIONAL SECTION: D.I. STD. 852.04 OR STD. 852.06	C.B. STD. 852.05	D.I. STD. 840.14 OR STD. 840.15	D.I. FRAME AND GRATES STD. 840.16	G.D.I. TYPE "A" STD. 840.17 OR STD. 840.26	G.D.I. TYPE "B" STD. 840.18 OR STD. 840.27	G.D.I. (W.S. FLAT) FRAME W/ 2 GRATES STD.840.20	G.D.I. (W.S. SAG) FRAME W/ GRATE STD. 840.22	G.D.I. (W.S. SAG) FRAME W/ 2 GRATES STD. 840.22	G.D.I. (N.S. SAG) FRAME W/ 2 GRATES STD. 840.24	T.B.D.I. STD. 840.35	SPRING BOX STD. 840.41	SPECIAL EXTRA DEPTH 36" JUNCTION BOX	TRAFFIC BEARING JUNCTION BOX 840.34	M.H. FRAME AND COVER STD. 840.54	15" SIDE DRAIN PIPE ELBOW	18" SIDE DRAIN PIPE ELBOW	24" SIDE DRAIN PIPE ELBOW	30" SIDE DRAIN PIPE ELBOW	36" SIDE DRAIN PIPE ELBOW	BERM DITCH OUTLET STD. 850.10	BERM DITCH OUTLET STD. 850.11	BERM DITCH OUTLET FOR 36" PIPE, SEE SHT.2C-5	PREFORMED SCOUR HOLE (PER EACH)	FLOWABLE FILL CY	PIPE COLLAR STD. 840.72 CY	PIPE REMOVAL LIN. FT.	REMARKS
0715																																				31	REM. EX. 15" CMP
0716																															1						
0716	0718																										1										
0717		1													1				1																		
0717	0718																																				
0718		1	2.4												1				1																		
0718	0719																																			57	REM. EX. 24" CMP
0720		1														1				1																	
0720	0721																																				
0721		1													1			1																			
0721	0801																																				
0722																																					
0801		1													1			1																			
0801	0802																																				
0802		1														1				1																	
0802	0803																																				
0803																																	1				
0804		1													1			1																			
0804	0805																																				
0805		1														1				1																	
0805	0806																																	3			FILL & PLUG EX. 18" RCP
0806																																	1				
0807																															1						
0807	0809																										1										
0808		1													1			1																			
0808	0809																																				
0809		1													1			1																			
0809	0810																																			44	REM. EX. 24" CMP
0811		1													1			1																			
0811	0813																																				
0812		1								1		1	1																								
0812	0813																																	3			FILL & PLUG EX. 18" RCP
0813		1								1		1	1																								
0813	0814																																				
0814																																	1				
0815		1								1		1	1																								
0815	0816																																				
0901		1								1		1	1																								
0901	0906																																				
0902		1								1		1	1																								
0902	0904																																				
0903		1													1	1																					
0903	0904																																				
0904		1													1	1																					
0904	0905																																				
0905		1													1	1																					
0905	0906																																				
0906		1													1	1																					
0906	0907																																				
0907																																	1				
SHEET TOTALS		20	2.4							5		5	5		12	7		6	2	3							2				2		4	6		131	

ABBREVIATIONS

C.A.A.	CORRUGATED ALUMINIUM ALLOY
C.B.	CATCH BASIN
C.S.	CORRUGATED STEEL
D.I.	DROP INLET
G.D.I.	GRATED DROP INLET
H.D.P.E.	HIGH DENSITY POLYETHYLENE
J.B.	JUNCTION BOX
M.H.	MANHOLE
N.S.	NARROW SLOT
P.V.C.	POLYVINYL CHLORIDE
R.C.	REINFORCED CONCRETE
T.B.D.I.	TRAFFIC BEARING DROP INLET
T.B.J.B.	TRAFFIC BEARING JUNCTION BOX
W.S.	WIDE SLOT

DL-2KYBDZ1

COMPUTED BY: BNE DATE: 9/18/2014

CHECKED BY: CJT DATE: 4/22/2015

PROJECT NO.	SHEET NO.
R-2915B	3D-4

NORTH CAROLINA DEPARTMENT OF TRANSPORTATION
DIVISION OF HIGHWAYS

Note: Invert Elevations indicated are for Bid Purposes only and shall not be used for project construction stakeout. See "Standard Specifications For Roads and Structures, Section 300-5".

LIST OF PIPES, ENDWALLS, ETC. (FOR PIPES 48 INCHES & UNDER)

LINE & STATION	OFFSET	STRUCTURE NUMBER FROM	TO	TOP ELEVATION FT.	INVERT ELEVATION FT.	INVERT ELEVATION FT.	MINIMUM REQUIRED SLOPE %
L 221+95	11 RT	0908		2874.0			
		0908	0909		2871.3	2861.5	
L 221+95	72 RT	0909		2861.5			
L 228+00	11 RT	0910		2872.9			
		0910	0911		2870.2	2863.0	
L 222+27	71 LT	0912			2868.0	2867.0	
L 222+69		0913			2867.0	2857.0	
L 219+61	61 LT	0916					
L 231+00	12 RT	1001		2871.3			
		1001	1002		2868.6	2868.2	
L 231+50	12 RT	1002		2871.0			
		1002	1003		2868.2	2858.6	
L 231+50	72 RT	1003		2858.6			
L 232+80	42 RT	1004		2869.3			
		1004	1005		2866.6	2855.1	
L 232+80	79 RT	1005		2855.1			
L 233+40	12 LT	1006		2869.8			
		1006	1007		2867.1	2857.1	
L 236+30	41 LT	1008		2868.6			
		1008	1009		2865.8	2865.4	
L 235+52	40 LT	1009		2868.8			
		1009	1010		2865.4	2865.3	
L 235+52	12 LT	1010		2868.9			
		1010	1012		2865.3	2865.0	
L 235+00	42 RT	1011		2868.4			
		1011	1012		2865.7	2865.0	
L 235+52	42 RT	1012		2868.3			
		1012	1013		2865.0	2854.6	
L 240+90	42 RT	1014		2871.5			
		1014	1015		2868.7	2868.1	
L 239+22	42 RT	1015		2870.9			
		1015	1016		2868.1	2856.5	
L 241+20	42 LT	1017		2871.6			
		1017	1018		2868.8	2867.2	
L 238+00	42 LT	1018		2869.9			
		1018	1019		2867.2	2857.0	0.5
L 238+00	81 LT	1019		2857.0			
Y12 14+38		1020			2862.0	2861.0	0.4
L 244+12	42 RT	1101		2873.5			
		1101	1102		2870.8	2870.6	
L 244+62	42 RT	1102		2874.4			
		1102	1103		2870.6	2869.9	
L 247+00	42 RT	1103		2881.2			
		1103	1104		2869.9	2856.1	0.8
L 244+44	42 LT	1105		2873.7			
		1105	1106		2871.0	2870.8	
L 244+94	42 LT	1106		2875.1			
		1106	1108		2870.8	2870.2	
L 248+00	42 LT	1107		2884.9			
		1107	1108		2882.2	2870.2	

SIZE / THICKNESS OR GAUGE — Side Drain Pipe (RCP, CSP, CAAP, HDPE, or PVC) and C. S. PIPE (SE: SHOP ELONGATED)

STR. (FROM–TO)	SD 15	SD 18	SD 24	SD 30	SD 36	SD 42	SD 48	DO NOT USE RCP	DO NOT USE CSP	DO NOT USE CAAP	DO NOT USE HDPE	DO NOT USE PVC	CS 12 .064	CS 15 .064	CS 18 .064	CS 24 .064	CS 30 .079	CS 36 .079	CS 42 .109	CS 48 .109
0908																				
0908–0909														60						
0909																				
0910																				
0910–0911																				
0912																				
0913																				
0916	28																			
1001																				
1001–1002																				
1002																				
1002–1003														60						
1003																				
1004																				
1004–1005	36							X												
1005																				
1006																				
1006–1007														76						
1008																				
1008–1009																				
1009																				
1009–1010																				
1010																				
1010–1012																				
1011																				
1011–1012																				
1012																				
1012–1013	40							X												
1014																				
1014–1015																				
1015																				
1015–1016	44							X												
1017																				
1017–1018																				
1018																				
1018–1019	40							X												
1019																				
1020																				
1101																				
1101–1102																				
1102																				
1102–1103																				
1103																				
1103–1104	60							X												
1105																				
1105–1106																				
1106																				
1106–1108																				
1107																				
1107–1108																				
SHEET TOTALS	248													196						

R. C. PIPE CLASS III and R. C. PIPE CLASS IV

STR. (FROM–TO)	RC III 12	RC III 15	RC III 18	RC III 24	RC III 30	RC III 36	RC III 42	RC III 48	RC IV 12	RC IV 15	RC IV 18	RC IV 24	RC IV 30	RC IV 36	RC IV 42	RC IV 48
0908																
0908–0909																
0909																
0910																
0910–0911										88						
0912			76													
0913						144										
0916																
1001																
1001–1002										48						
1002																
1002–1003																
1003																
1004																
1004–1005																
1005																
1006																
1006–1007																
1008																
1008–1009										76						
1009																
1009–1010										28						
1010																
1010–1012										52						
1011																
1011–1012										52						
1012																
1012–1013																
1014																
1014–1015										168						
1015																
1015–1016																
1017																
1017–1018										324						
1018																
1018–1019																
1019																
1020				108												
1101																
1101–1102										52						
1102																
1102–1103										240						
1103																
1103–1104																
1105																
1105–1106										52						
1106																
1106–1108										208						
1107																
1107–1108										104						
SHEET TOTALS			76	108		144				1492						

QUANTITIES FOR DRAINAGE STRUCTURES — NOTE: TOTAL LIN. FT. FOR PAY QUANTITY SHALL BE A + (1.3 X B). FRAME, GRATES, AND HOOD STD. 840.03. CONCRETE TRANSITIONAL SECTION.

STR. (FROM–TO)	30" WELDED STEEL PIPE 0.469" THICK, GRADE B IN SOIL	30" WELDED STEEL PIPE 0.469" THICK, GRADE B NOT IN SOIL	ENDWALLS STD. 838.01 OR STD. 838.11 (UNLESS NOTED OTHERWISE) CY	REINFORCED ENDWALLS CY	DRAINAGE STRUCTURE MASONRY CY	0' THRU 5' EACH	A: 5' THRU 10' LIN. FT.	B: 10' AND ABOVE LIN. FT.	C.B. STD. 840.01 OR STD. 840.02	GRATE TYPE E	GRATE TYPE F	GRATE TYPE G		D.I. STD. 852.04 OR STD. 852.06	C.B. STD. 852.05
0908						1									
0908–0909															
0909															
0910						1									
0910–0911															
0912															
0913															
0916															
1001						1									
1001–1002															
1002						1									
1002–1003															
1003															
1004						1									
1004–1005															
1005															
1006						1									
1006–1007															
1008						1									
1008–1009															
1009						1									
1009–1010															
1010						1									
1010–1012															
1011						1									
1011–1012															
1012						1									
1012–1013															
1014						1									
1014–1015															
1015						1									
1015–1016															
1017						1									
1017–1018															
1018						1									
1018–1019															
1019															
1020															
1101						1									
1101–1102															
1102						1									
1102–1103															
1103						1	5.0	1.3							
1103–1104															
1105						1									
1105–1106															
1106						1									
1106–1108															
1107						1									
1107–1108															
SHEET TOTALS						21	5.0	1.3							

STR. (FROM–TO)	D.I. STD. 840.14 OR STD. 840.15	D.I. FRAME AND GRATES STD. 840.16	G.D.I. TYPE "A" STD. 840.17 OR STD. 840.26	G.D.I. TYPE "B" STD. 840.18 OR STD. 840.27	G.D.I. (W.S. FLAT) FRAME W/ 2 GRATES STD.840.20	G.D.I. (W.S. SAG) FRAME W/ GRATE STD. 840.22	G.D.I. (W.S. SAG) FRAME W/ 2 GRATES STD. 840.22	G.D.I. (N.S. SAG) FRAME W/ 2 GRATES STD. 840.24	T.B.D.I. STD. 840.35	SPRING BOX STD. 840.41	SPECIAL EXTRA DEPTH 36" JUNCTION BOX	TRAFFIC BEARING JUNCTION BOX 840.34	M.H. FRAME AND COVER STD. 840.54	15" SIDE DRAIN PIPE ELBOW	18" SIDE DRAIN PIPE ELBOW	24" SIDE DRAIN PIPE ELBOW	30" SIDE DRAIN PIPE ELBOW	36" SIDE DRAIN PIPE ELBOW	BERM DITCH OUTLET STD. 850.10	BERM DITCH OUTLET STD. 850.11	BERM DITCH OUTLET FOR 36" PIPE, SEE SHT.2C-5	PREFORMED SCOUR HOLE (PER EACH)	FLOWABLE FILL CY	PIPE COLLAR STD. 840.72 CY	PIPE REMOVAL LIN. FT.	REMARKS
0908					1				1																	
0908–0909																										
0909																						1				
0910					1				1																	
0910–0911																										
0912																									142	REM. EX. 30" RCP, TWO EX. 15" HDPEs
0913																									158	REM. EX. 36" CMP, DI
0916																									29	REM. EX. 18" CMP
1001					1				1																	
1001–1002																										
1002					1				1																	
1002–1003																										
1003																						1				
1004				1	1																					
1004–1005														2												
1005																						1				
1006					1				1																	
1006–1007																										
1008					1				1																	
1008–1009																										
1009					1				1																35	REM. EX. 12" CMP
1009–1010																										
1010					1				1																	
1010–1012																									31	REM. EX. 12" CMP
1011				1	1																					
1011–1012																										
1012				1	1																					
1012–1013														2												
1014				1	1																					
1014–1015																										
1015				1	1																					
1015–1016														2												
1017				1	1																					
1017–1018																										
1018				1	1																					
1018–1019														2												
1019																						1				
1020																									48	REM. EX. 18" CMP
1101				1	1																				23	REM. EX. 8" CMP
1101–1102																										
1102				1	1																					
1102–1103																										
1103				1	1																					
1103–1104														2												
1105				1	1																				20	REM. EX. 8" CMP
1105–1106																										
1106				1	1																					
1106–1108																										
1107				1	1																				155	REM. FOUR EX. 10" CMP's, DI's
1107–1108																									39	REM. EX. 6" CMP, DI
SHEET TOTALS				13	21				8					10								4			682	

ABBREVIATIONS

C.A.A.	CORRUGATED ALUMINIUM ALLOY
C.B.	CATCH BASIN
C.S.	CORRUGATED STEEL
D.I.	DROP INLET
G.D.I.	GRATED DROP INLET
H.D.P.E.	HIGH DENSITY POLYETHYLENE
J.B.	JUNCTION BOX
M.H.	MANHOLE
N.S.	NARROW SLOT
P.V.C.	POLYVINYL CHLORIDE
R.C.	REINFORCED CONCRETE
T.B.D.I.	TRAFFIC BEARING DROP INLET
T.B.J.B.	TRAFFIC BEARING JUNCTION BOX
W.S.	WIDE SLOT

DL-2KYBDZ1

COMPUTED BY:	BNE	DATE:	9/18/2014
CHECKED BY:	CJT	DATE:	4/22/2015

PROJECT NO.	SHEET NO.
R-2915B	3D-5

NORTH CAROLINA DEPARTMENT OF TRANSPORTATION
DIVISION OF HIGHWAYS

Note: Invert Elevations indicated are for Bid Purposes only and shall not be used for project construction stakeout.
See "Standard Specifications For Roads and Structures, Section 300-5".

LIST OF PIPES, ENDWALLS, ETC. (FOR PIPES 48 INCHES & UNDER)

LINE & STATION	OFFSET	STRUCTURE NUMBER FROM	TO	TOP ELEVATION FT.	INVERT ELEVATION FT.	INVERT ELEVATION FT.	MINIMUM REQUIRED SLOPE %	Side Drain Pipe (RCP, CSP, CAAP, HDPE, or PVC) 15	18	24	30	36	42	48	DO NOT USE RCP	DO NOT USE CSP	DO NOT USE CAAP	DO NOT USE HDPE	DO NOT USE PVC	C. S. PIPE (SE: SHOP ELONGATED) 12 (.064)	15 (.064)	18 (.064)	24 (.064)	30 (.079)	36 (.079)	42 (.109)	48 (.109)
L 247+00	42 LT	1108		2881.0																							
		1108	1109		2870.2	2858.0	1.4	60							X												
DET 252+86	64 LT	1110		2911.3																							
		1110	1111		2908.5	2908.2																					
DET 253+06	5 LT	1111		2915.9																							
		1111	1112		2907.5	2902.5	0.4																				
DET 252+25	73 RT	1112		2907.2																							
		1112	1113		2902.0	2860.0	0.8				232				X												
DET 256+87	45 LT	1201		2943.4																							
		1201	1203		2940.7	2940.3																					
		1202	1203		2940.0	2939.5				20																	
DET 256+45	24 RT	1203		2943.3																							
		1203	1111		2939.5	2912.1																					
Y13A 12+35	17 RT	1204							56																		
DR5 10+23		1205						28																			
L 158+88	LT																					24					
L 164+15	LT																					24					
L 174+52	LT																					52					
L 200+75	LT																					52					
L 222+24	LT																					52					
L 229+75	LT																					52					
L 170+24	CL																					32					
L 200+76	CL																					48					
L 222+26	CL																					48					
L 229+74	CL																					52					
SHEET TOTALS								88	56	20	232											436					
PROJECT TOTALS								1336	740	1104	232	24									300	436	152				

LINE & STATION	FROM	TO	R. C. PIPE CLASS III 12	15	18	24	30	36	42	48	R. C. PIPE CLASS IV 12	15	18	24	30	36	42	48	30" WELDED STEEL PIPE 0.469" THICK, GRADE B IN SOIL	30" WELDED STEEL PIPE 0.469" THICK, GRADE B NOT IN SOIL	ENDWALLS STD. 838.01 OR STD. 838.11 (UNLESS NOTED OTHERWISE) CY	REINFORCED ENDWALLS CY	DRAINAGE STRUCTURE MASONRY CY	QUANTITIES FOR DRAINAGE STRUCTURES 0' THRU 5' EACH	5' THRU 10' (A) LIN. FT.	10' AND ABOVE (B) LIN. FT.	C.B. STD. 840.01 OR STD. 840.02	FRAME, GRATES, AND HOOD STD. 840.03 GRATE TYPE E	F	G		CONCRETE TRANSITIONAL SECTION D.I. STD. 852.04 OR STD. 852.06	C.B. STD. 852.05
L 247+00	1108																							1	5.0	0.8							
DET 252+86	1110																							1									
	1110	1111		60																													
DET 253+06	1111																							1	3.4								
	1111	1112				112																											
DET 252+25	1112																							1	0.3								
DET 256+87	1201																							1									
	1201	1203										80																					
DET 256+45	1203																							1									
	1203	1111												340																			
SHEET TOTALS				60		112						80		340										6	8.7	0.8							
PROJECT TOTALS			88	384	176	296		344				3856		536		28			142	142				88	36.2							11	

LINE & STATION	FROM	TO	D.I. STD. 840.14 OR STD. 840.15	D.I. FRAME AND GRATES STD. 840.16	G.D.I. TYPE "A" STD. 840.17 OR STD. 840.26	G.D.I. TYPE "B" STD. 840.18 OR STD. 840.27	G.D.I. (W.S. FLAT) FRAME W/ 2 GRATES STD.840.20	G.D.I. (W.S. SAG) FRAME W/ GRATE STD. 840.22	G.D.I. (W.S. SAG) FRAME W/ 2 GRATES STD. 840.22	G.D.I. (N.S. SAG) FRAME W/ 2 GRATES STD. 840.24	T.B.D.I. STD. 840.35	SPRING BOX STD. 840.41	SPECIAL EXTRA DEPTH 36" JUNCTION BOX	TRAFFIC BEARING JUNCTION BOX 840.34	M.H. FRAME AND COVER STD. 840.54	15" SIDE DRAIN PIPE ELBOW	18" SIDE DRAIN PIPE ELBOW	24" SIDE DRAIN PIPE ELBOW	30" SIDE DRAIN PIPE ELBOW	36" SIDE DRAIN PIPE ELBOW	BERM DITCH OUTLET STD. 850.10	BERM DITCH OUTLET STD. 850.11	BERM DITCH OUTLET FOR 36" PIPE, SEE SHT.2C-5	PREFORMED SCOUR HOLE (PER EACH)	FLOWABLE FILL CY	PIPE COLLAR STD. 840.72 CY	PIPE REMOVAL LIN. FT.	REMARKS
L 247+00	1108					1	1																					
	1108	1109														2												
DET 252+86	1110					1			1																			
	1110	1111																									81	REM. EX. 66" RCP, 12" CMP, DI
DET 253+06	1111													1														T.B.J.B. WITH SLAB LID
DET 252+25	1112				1				1																			
	1112	1113																	2								105	REM. EX. 18" CMP, 15" CMP, 10" CMP
DET 256+87	1201					1			1																			
DET 256+45	1203													1														T.B.J.B. WITH SLAB LID
	1203	1111																									60	REM. EX. 18" CMP
Y13A 12+35	1204																										51	REM. EX. 18" CMP
DR5 10+23	1205																										34	REM. EX. 15" CMP
L 158+88																											24	TEMPORARY PIPE FOR TMP
L 164+15																											24	TEMPORARY PIPE FOR TMP
L 174+52																											52	TEMPORARY PIPE FOR TMP
L 200+75																											52	TEMPORARY PIPE FOR TMP
L 222+24																											52	TEMPORARY PIPE FOR TMP
L 229+75																											52	TEMPORARY PIPE FOR TMP
L 170+24																											32	TEMPORARY PIPE FOR TMP
L 200+76																											48	TEMPORARY PIPE FOR TMP
L 222+26																											48	TEMPORARY PIPE FOR TMP
L 229+74																											52	TEMPORARY PIPE FOR TMP
																									67		80	SHEET TOTALS FROM 3D-6
SHEET TOTALS					1	3	1		3					2		2			2						67		847	
PROJECT TOTALS			11	11	7	48	44	1	21	8	18	1	1	2	1	18	5	6	2	1	1	6	1	12	77	0.764	2722	

ABBREVIATIONS

C.A.A.	CORRUGATED ALUMINIUM ALLOY
C.B.	CATCH BASIN
C.S.	CORRUGATED STEEL
D.I.	DROP INLET
G.D.I.	GRATED DROP INLET
H.D.P.E.	HIGH DENSITY POLYETHYLENE
J.B.	JUNCTION BOX
M.H.	MANHOLE
N.S.	NARROW SLOT
P.V.C.	POLYVINYL CHLORIDE
R.C.	REINFORCED CONCRETE
T.B.D.I.	TRAFFIC BEARING DROP INLET
T.B.J.B.	TRAFFIC BEARING JUNCTION BOX
W.S.	WIDE SLOT

HL-CNU3509BZT

COMPUTED BY:	BNE	DATE:	9/18/2014
CHECKED BY:	CJT	DATE:	4/22/2015

PROJECT NO.	SHEET NO.
R-2915B	3D-6

NORTH CAROLINA DEPARTMENT OF TRANSPORTATION
DIVISION OF HIGHWAYS

Note: Invert Elevations indicated are for Bid Purposes only and shall not be used for project construction stakeout. See "Standard Specifications For Roads and Structures, Section 300-5".

LIST OF PIPES, ENDWALLS, ETC. (FOR PIPES 54 INCHES & OVER)

SIZE / THICKNESS OR GAUGE

LINE & STATION	OFFSET	STRUCTURE NUMBER FROM	STRUCTURE NUMBER TO	TOP ELEVATION FT.	INVERT ELEVATION FT.	INVERT ELEVATION FT.	MINIMUM REQUIRED SLOPE %	Side Drain Pipe (RCP, CSP, CAAP, HDPE, or PVC) 12	15	18	24	30	C. S. PIPE SHOP ELONGAT 12 .064	15 .064	18 .064	24 .064	R. C. PIPE CLASS III 12	15	18	24	30	36	42	48	54	60	66	72
L 217+48.7	77 LT	0914		2858.0																								
		0914	0915		2858.0	2857.0																				140		
L 217+47.7	64 RT	0915		2857.0																								
SHEET TOTALS																										140		
PROJECT TOTALS																										140		

LINE & STATION	R. C. PIPE CLASS IV 12	15	18	24	30	R. C. PIPE CLASS V 12	15	18	24	30	36	42	48	STRUCTURAL PLATE PIPE 60	66	72		ENDWALLS STD. 838.01 OR STD. 838.11 (UNLESS NOTED OTHERWISE) CY	REINFORCED ENDWALLS CY	DRAINAGE STRUCTURE MASONRY CY	QUANTITIES FOR DRAINAGE STRUCTURES (NOTE: TOTAL LIN. FT. FOR PAY QUANTITY SHALL BE A + (1.3 X B)) 0' THRU 5' EACH	A 5' THRU 10' LIN. FT.	B 10' AND ABOVE LIN. FT.	C.B. STD. 840.01 OR STD. 840.02	FRAME, GRATES, AND HOOD STD. 840.03 GRATE TYPE E	F	G	
L 217+48.7																			5.600									
L 217+47.7																			5.600									
SHEET TOTALS																			11.200									
PROJECT TOTALS																			11.200									

LINE & STATION	CONCRETE TRANSITIONAL SECTION D.I. STD. 852.04 OR STD. 852.06	C.B. STD. 852.05	OPEN THROAT C.B. STD. 840.04 OR STD. 840.05	CONCRETE BRIDGE APPROACH D.I. STD. 840.13	D.I. STD. 840.14 OR STD. 840.15	D.I. FRAME AND GRATES STD. 840.16	G.D.I. TYPE "A" STD. 840.17 OR STD. 840.26	G.D.I. TYPE "B" STD. 840.18 OR STD. 840.27	SPRING BOX STD. 840.41		M.H. STD. 840.51, STD. 840.52, OR STD. 840.53	M.H. FRAME AND COVER STD. 840.54				BERM DITCH OUTLET STD. 850.10	BERM DITCH OUTLET STD. 850.11			MODIFIED CONC. FLUME	C FLOWABLE FILL CY	CONCRETE AND BRICK PIPE PLUG STD. 840.71	PIPE REMOVAL LIN. FT.	REMARKS
L 217+48.7																								REM. EX. 60" RCP, JB
																							80	REM. 80' OF EX. 54" CMP
L 217+47.7																					67			FILL AND PLUG 114' OF EX. 54" CMP
SHEET TOTALS																					67		80	
PROJECT TOTALS																					67		80	

ABBREVIATIONS

C.A.A.	CORRUGATED ALUMINIUM ALLOY
C.B.	CATCH BASIN
C.S.	CORRUGATED STEEL
D.I.	DROP INLET
G.D.I.	GRATED DROP INLET
H.D.P.E.	HIGH DENSITY POLYETHYLENE
J.B.	JUNCTION BOX
M.H.	MANHOLE
N.S.	NARROW SLOT
P.V.C.	POLYVINYL CHLORIDE
R.C.	REINFORCED CONCRETE
T.B.D.I.	TRAFFIC BEARING DROP INLET
T.B.J.B.	TRAFFIC BEARING JUNCTION BOX
W.S.	WIDE SLOT

STATE OF NORTH CAROLINA
DIVISION OF HIGHWAYS

SUMMARY OF GEOTEXTILE FOR PAVEMENT STABILIZATION

SURVEY LINE	STATION	STATION	LOCATION LT/RT/CL	YD^2
-L-	160+50	161+50	RT	467
-L-	185+00	186+25	LT	417
-L-	197+50	198+50	RT	444
-L-	228+00	234+00	RT	2,400
-L-	235+50	241+50	RT	2,667
-L-	244+00	249+50	RT	2,750
-L-	249+50	251+50	CL	2,889
			TOTAL:	12,034
			SAY:	12,034

SUMMARY OF SUBSURFACE DRAINAGE

SURVEY LINE	STATION	STATION	LOCATION LT/RT/CL	DRAIN TYPE* UD/BD/SD	LF
CONTINGENCY				SD	1,000
				TOTAL LF:	1,000

*UD = Underdrain
*BD = Blind Drain
*SD = Subsurface Drain

SUMMARY OF AGGREGATE SUBGRADE/STABILIZATION

SURVEY LINE	STATION	STATION	Aggregate Type ASU/AST	Aggregate Thickness INCHES	Shallow Undercut CY	Class IV Subgrade Stabilization TONS	Geotextile for Soil Stabilization SY	Stabilizer Aggregate TONS
-L-	CONTINGENCY		ASU		500	200	1200	
-L-	CONTINGENCY		AST	3				250
			TOTAL CY/TONS/SY:		500	200	1200	250

ASU = Aggregate Subgrade, AST = Aggregate Stabilization

* Total Square yards of Geotextile for Soil Stabilization is only the estimated quantity for ASU/AST and may only represent a portion of the geotextile quantity shown in the Item Sheets Proposal.

5/28/99
6/28/2005 2:28:28 PM
R2915B_Rdwy_SUM_3G-1.dgn
USER: thill

COMPUTED BY: DJC DATE: 4-30-2015
CHECKED BY: CJT DATE: 4-30-2015

PROJECT REFERENCE NO.	SHEET NO.
R-2915B	3P-1

STATE OF NORTH CAROLINA
DIVISION OF HIGHWAYS

PARCEL INDEX SHEET

PARCEL No.	SHEET No.	PROPERTY OWNER NAME
1	4	JOHN YATES
2	4,5	RICHARD FAYKO, JR. AND WIFE DONNA FAYKO
3	4	KEITH BLACKBURN
4	4	BAXTER DERRICK HARDIN, LONNIE MILLER, KENNETH DAY,
		WENDELL WILCOX, TRUSTEES OF MORNING STAR
		BAPTIST CHURCH
5	4	LAVERNE E. WATSON, MARTHA D. WATSON
6	4,5	THOMAS R. GRIGGS, PATRICIA D. GRIGGS,
		CHARLES G. DEAL, VIOLA A. DEAL
7	4,5	THOMAS R. GRIGGS, PATRICIA D. GRIGGS,
		CHARLES G. DEAL, VIOLA A. DEAL
8	4,5	BRICE R. GREENE AND WIFE RETA H. GREENE
9	4	THOMAS R. GRIGGS
10	4	DEAN POTTER
11	5	RICHARD TERRY GREENE, ET AL
11A	4,5	J0SEPH TURRISI, ANGELA TURRISI
11B	4,5	THOMAS R. GRIGGS, PATRICIA D. GRIGGS
12	5	CHARLES COOK AND WIFE ANITA COOK
13	5	BAXTER DERRICK HARDIN
13Z	5	BAXTER DERRICK HARDIN
14	5	MICHAEL W. MAYNARD, DEBORAH BROWN
15	5	DANNY L. WEST
15A	5,6	CARTER D. RANDALL & JEANNIE C. RANDALL
16	5,6	BLACK DOG ASSOCIATES, LLC
16A	5	EDWIN C. INGLE
16B	5,6	JOHN STACEY, ET AL
16C	5,6	GLENN MISINCO
17	5,6	CATHERINE GREEN
18	6	RODNEY C. OLIVER, MILLICENT J. OLIVER
19	6	JONATHAN ROY COLLINS, TERRY LYNN IRISH
20	6	EDWARD PHILLIPS
21	6,7	MILLER PROPERTIES OF ASHE, LLC, ET AL
22	6	JAMES D. ALEXANDER, DONNA T. ALEXANDER
23	6,7	RICHARD E. WATSON, LISA H. WATSON
24	6,7	GARY E. TAYLOR, VICKIE TAYLOR
25	7	PER A. KJONSO, MICHELLE KJONSO
26	7	LUIS M. FALERO, ROSARY P. FALERO
27	7	ROBERT L. KILBY, JOYCE T. KILBY
28	7	ROBERT L. KILBY, JOYCE T. KILBY
29	7	LUNDY TRIVETTE HEIRS
30	7,8,9	NITA FERRELL LANGER, TRUSTEE
31	7,8	JERRY GRAY STYERS, GERALDINE MYERS STYERS
32	8	PHIL A. TEMPLETON, PHYLLIS TEMPLETON
33	8	MICHAEL K. GOODMAN, FREDA R. GOODMAN
34	8,9	JAMES CLINE CHURCH, ELLEN LEMLY CHURCH
35	9,10	ARCHIE L. PIERCE, NANCY C. PIERCE
36	9	JAMES CLINE CHURCH, ELLEN LEMLY CHURCH
37	9	JAMES CLINE CHURCH, ELLEN LEMLY CHURCH
38	9,10	RICHARD W. LEMLY, MINNIE C. LEMLY, TRUSTEES OF THE
		RICHARD W. LEMLY LIVING TRUST
39	10,11	CLAYTON LEMLY, RUTH H. LEMLY
40	10,11	RICHARD LEMLY
41	10,11	MINNIE C. LEMLY TRUST, RICHARD LEMLY
42	11	TRACY C. LEMLY, ELIZABETH C. LEMLY
43	11	JAMES CLINE CHURCH, ELLEN L. CHURCH, EVELYN LEMLY
44	11,12	RICK D. WEAVER, ALLISON L. WEAVER
45	11	RICHARD C. CORNEJO, LORETTA A. CORNEJO
46	11,12	BARNEY F. WATSON, RAMONA N. WATSON, TRUSTEES OF
		THE WATSON FAMILY TRUST
47	11,12	TRACY C. LEMLY, ELIZABETH C. LEMLY

PARCEL No.	SHEET No.	PROPERTY OWNER NAME
48	12	JANET LOU YOUNG
49	12	RONALD S. GREENE, CARLENE G. GREENE
50	12	RIVER RIDGE UNLIMITED, INC.
51	12	BARBARA CARTER LIVING TRUST
52	12	BARBARA CARTER LIVING TRUST
53	11, 12	ROBERT T. PAISLEY
54	12	RONALD S. GREENE
55	11	JACKIE W. NOBLETT

REVISIONS

5/28/99

6/26/2015 8:10:37 AM
R:\2015\R-2915B\Proj\R-2915B_SUM_3P-1.dgn
USER: cjt MANIP: 1

PROJECT REFERENCE NO.	SHEET NO.
R-2915B	4
R/W SHEET NO.	

ROADWAY DESIGN ENGINEER
7/17/2015 SEAL 14160 NORTH CAROLINA PROFESSIONAL ENGINEER DOUGLAS B. SAUNDERS
Douglas B. Saunders, PE

HYDRAULICS ENGINEER
7/17/2015 SEAL 9334 NORTH CAROLINA PROFESSIONAL ENGINEER W. HENRY WELLS JR.
W. Henry Wells Jr.

CDM Smith — Camp Dresser & McKee, 5400 Glenwood Avenue, Suite 300, Raleigh, NC 27612-3228, NC COA No. F-0412

SUNGATE DESIGN GROUP, P.A., 915 JONES FRANKLIN ROAD, RALEIGH, NORTH CAROLINA 27606, NC COA No. C-0890

CURVE DATA FOR LINE -L-		
PIs Sta 159+39.85	PIs Sta 164+67.93	PI Sta 166+14.75
Θs = 6° 58' 44.0"	Θs = 8° 16' 12.2"	Δ = 4° 52' 01.0" (RT)
Ls = 324.00'	Ls = 306.00'	D = 5° 24' 18.9"
LT = 216.17'	LT = 204.22'	L = 90.04'
ST = 108.15'	ST = 102.20'	T = 45.05'
		R = 1,060.00'
		SE = 0.06
		RUNOFF = 306.00'

NAD 83 /CORS

-L- CS Sta. 158+31.70 LA. =
-L- CS Sta. 160+01.83 LB.
BEGIN TIP PROJECT R-2915B
END TIP PROJECT R-2915A

-L- TS Sta. 162+63.70

CL 'I' RIP RAP STREAM BANK STABILIZATION AND FLOODPLAIN BENCH EST. 15 TONS SEE DETAIL #36

TEMPORARY SHORING -L- STA. 161+10+/-, 0.5' LT TO -L- STA. 162+10+/-, 0.5' LT QUANTITY = 850 SQ. FT.

TIE IN EXIST. SLOPES WITH FILL, SEE X-SECTS

-L- POT Sta. 161+65.04 END CULVERT

-L- ST Sta. 161+55.70

SHOULDER BERM GUTTER FROM STA 160+25 TO STA 162+63 -L- LT

-L- POS Sta. 161+32.67 BEGIN CULVERT

-L- SC Sta. 157+96.88

-L- POS Sta. 163+50.44 = -DRI- POT Sta. 10+00.00

MATCH TO SHEET 5 -L- POC Sta. 164+00.00

-DRI- PC Sta. 10+53.29

-DRI- PRC Sta. 10+88.19

-DRI- PT Sta. 11+61.45

-DRI- PC Sta. 12+79.58

-DRI- PT Sta. 13+49.50

-DRI- PC Sta. 14+35.40

-DRI- PT Sta. 14+98.10

-DRI- POT Sta. 15+43.00 END CONSTRUCTION

-BL-GPS-2915-5

-L- Sta. 158+52.64 = -Y9A- PC Sta 10+00.00

-L- SRS Sta. 154+72.88

-Y9A- PT Sta. 13+09.68

-Y9A- POT Sta. 13+10.00 END CONSTRUCTION

CURVE DATA FOR -Y9A-
PI Sta 11+60.32
Δ = 36° 35' 02.5" (LT)
D = 11° 48' 48.8"
L = 309.68'
T = 160.32'
R = 485.00'
SE = 06
RO = 124.08

CURVE DATA FOR LINE -DRI-			
PI Sta 10+71.67	PI Sta 11+25.16	PI Sta 13+17.28	PI Sta 14+66.81
Δ = 44° 26' 06.8" (RT)	Δ = 19° 04' 45.2" (LT)	Δ = 53° 08' 01.5" (LT)	Δ = 8° 58' 51.4" (LT)
D = 127° 19' 26.2"	D = 26° 02' 36.7"	D = 75° 59' 20.8"	D = 14° 19' 26.2"
L = 34.90'	L = 73.26'	L = 69.92'	L = 62.70'
T = 18.38'	T = 36.97'	T = 37.70'	T = 31.41'
R = 45.00'	R = 220.00'	R = 75.40'	R = 400.00'
SE = NC	SE = NC	SE = NC	SE = NC

HERBERT D. WATSON, L/E DB 0-4 PG 255

CATHERINE R. CLARK DB 275 PG 170

HUBERT E. HAMILTON DB 282 PG 1776

SHANE VANNOY, LLC DB 390 PG 769

JOHN YATES DB 402 PG 1707

RICHARD FAYKO, JR. AND WIFE DONNA FAYKO DB 282, PG 1081

BRICE R. GREENE AND WIFE RETA H. GREENE DB 253, PG 1693

THOMAS R. GRIGGS PATRICIA D. GRIGGS CHARLES G. DEAL VIOLA A. DEAL DB 271, PG 743

CHARLES L. DEAL THOMAS R. GRIGGS PATRICIA D. GRIGGS ETAL. DB 130, PG 148

THOMAS R. GRIGGS PATRICIA D. GRIGGS DB 197, PG 1097 DB 251, PG 2157

KEITH BLACKBURN DB 126, PG 1493

RAY T. SMITH, ET.AL DB 0-4 PG 518

MARTHA D. WATSON DB 0-4, PG III

FS HOLDING, LTD. & BAXTER NORRIS CONSTRUCTION DB 242 PG 2234 PB 7 PG 53 PB 6 PG 64

BAXTER DERRICK HARDIN LONNIE MILLER KENNETH DAY WENDELL WILCOX TRUSTEES OF MORNING STAR BAPTIST CHURCH DB 226, PG 626 PORTION OF PB 5, PG 242

JOSEPH TURRISI ANGELA TURRISI DB 254, PG 380 DB 350, PG 2170 DB 212, PG 471 DB 255, PG 131 DB 254, PG 378

THOMAS R. GRIGGS DB 251, PG 2159 PORTION OF PB 5, PG 590

DEAN POTTER DB 251, PG 1563 PORTION OF PB 5, PG 590

KAREN FLOWE PRESLAR AMY F. ROSE DB 206, PG 1446 PB 5 PG 242

TO BE DONE BY OTHERS

24' DRIVE TO BE CONSTRUCTED BY OTHERS

ACCESS POINT

AREA UNDER CONSTRUCTION

DRIVEWAY RADII ARE 15' UNLESS OTHERWISE NOTED

SEE SHEET 13 FOR -L- PROFILE
SEE SHEET 20 FOR -DRI- PROFILE
SEE SHEETS 2D-1 THRU 2D-3 FOR DRAINAGE DETAILS
SEE SHEETS C-1 THRU C-13 FOR CULVERT PLANS

REVISIONS

7/16/2015 H:\DGN\ROADWAY\R-2915B_Rdy_psh_04.dgn
USER: F.Rhodes, 153: Rdy_psh_04.dgn

PROJECT REFERENCE NO.	SHEET NO.
R-2915B	5
R/W SHEET NO.	

ROADWAY DESIGN ENGINEER: NORTH CAROLINA PROFESSIONAL SEAL 14160 ENGINEER DOUGLAS B. SAUNDERS — Douglas B. Saunders, PE — 7/21/2015

HYDRAULICS ENGINEER: NORTH CAROLINA PROFESSIONAL SEAL 9334 ENGINEER W. HENRY WELLS JR. — Docusigned by: W. Henry Wells Jr. — 7/21/2015

CDM Smith — Camp Dresser & McKee, 5400 Glenwood Avenue, Suite 300, Raleigh, NC 27612-3228, NC COA No. F-0412

SUNGATE DESIGN GROUP, P.A., 915 JONES FRANKLIN ROAD, RALEIGH NORTH CAROLINA 27606, NC COA No. C-0890

REVISIONS

5/14/99

NAD 83 /CORS

CURVE DATA FOR LINE -L-				
PIs Sta 164+67.93	PI Sta 166+14.75	PIs Sta 167+61.95	PIs Sta 171+69.97	PI Sta 175+62.67
Θs = 8° 16' 12.2"	Δ = 4° 52' 01.0" (RT)	Θs = 8° 16' 12.2"	Θs = 8° 16' 12.2"	Δ = 30° 41' 43.3" (LT)
Ls = 306.00'	D = 5° 24' 18.9"	Ls = 306.00'	Ls = 306.00'	D = 5° 24' 18.9"
LT = 204.22'	L = 90.04'	LT = 204.22'	LT = 204.22'	L = 567.88'
ST = 102.20'	T = 45.05'	ST = 102.20'	ST = 102.20'	T = 290.93'
	R = 1,060.00'			R = 1,060.00'
	SE = 0.06			SE = 0.06
	RUNOFF = 306.00'			RUNOFF = 306.00'

CURVE DATA FOR LINE -Y9-	
PI Sta 11+03.56	PI Sta 13+37.14
Δ = 30° 52' 08.4" (LT)	Δ = 78° 27' 45.3" (LT)
D = 32° 44' 25.6"	D = 57° 17' 44.8"
L = 94.28'	L = 136.94'
T = 48.32'	T = 81.65'
R = 175.00'	R = 100.00'
SE = 0.04	SE = 0.06
RUNOFF = 52.00'	RUNOFF = 84.00'

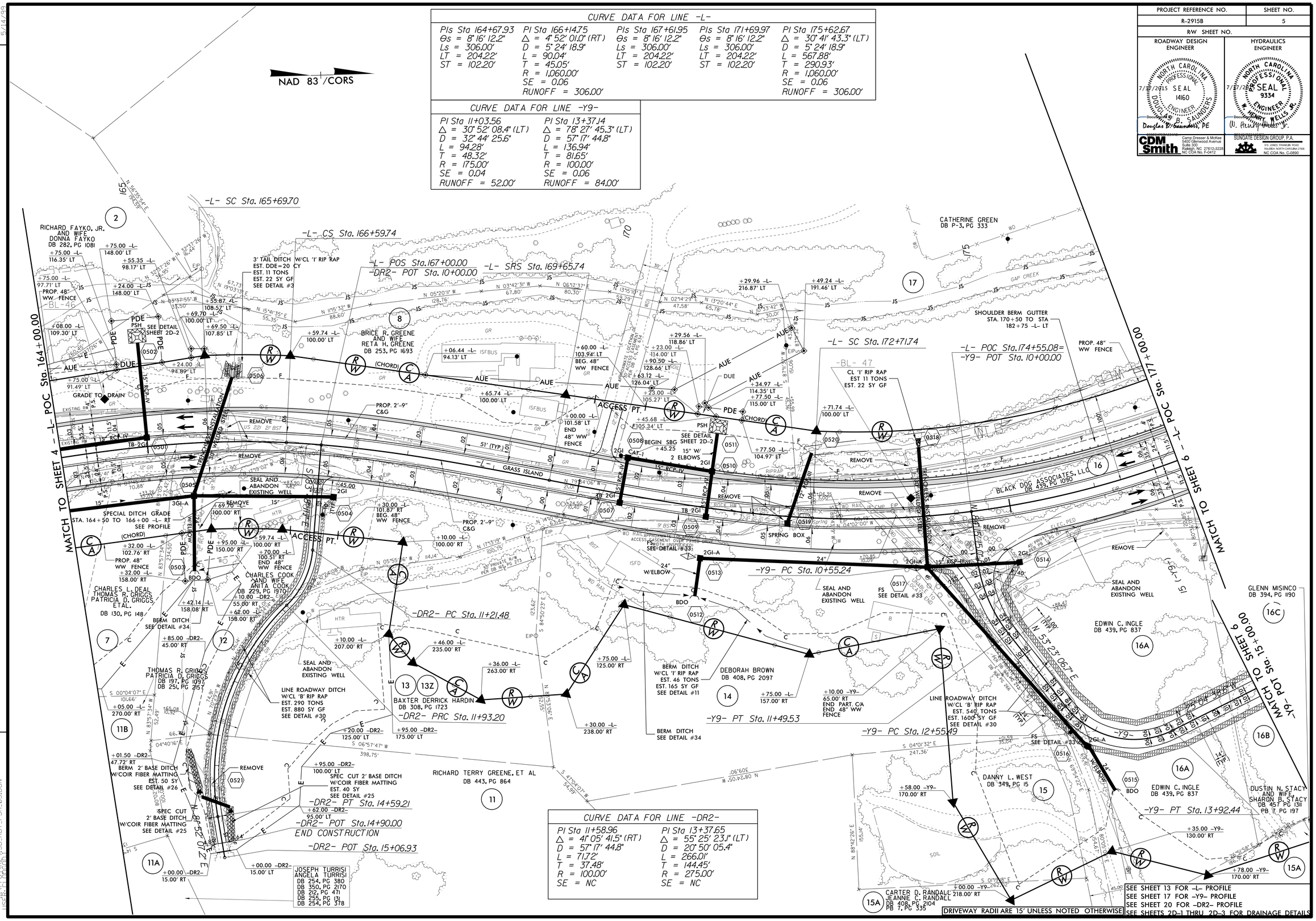

CURVE DATA FOR LINE -DR2-	
PI Sta 11+58.96	PI Sta 13+37.65
Δ = 41° 05' 41.5" (RT)	Δ = 55° 25' 23.1" (LT)
D = 57° 17' 44.8"	D = 20° 50' 05.4"
L = 71.72'	L = 266.01'
T = 37.48'	T = 144.45'
R = 100.00'	R = 275.00'
SE = NC	SE = NC

SEE SHEET 13 FOR -L- PROFILE
SEE SHEET 17 FOR -Y9- PROFILE
SEE SHEET 20 FOR -DR2- PROFILE
SEE SHEETS 2D-1 THRU 2D-3 FOR DRAINAGE DETAILS

7/16/2015 1:07:15 PM
USER: CPRAYLOR
FILE: R-2915B_RDY_PSH_05.DGN

PROJECT REFERENCE NO.	SHEET NO.
R-2915B	6
R/W SHEET NO.	

ROADWAY DESIGN ENGINEER
NORTH CAROLINA PROFESSIONAL SEAL 14160 ENGINEER DOUGLAS B. SAUNDERS
7/31/2015
DocuSigned by: Douglas B. Saunders, PE

HYDRAULICS ENGINEER
NORTH CAROLINA PROFESSIONAL SEAL 9334 ENGINEER W. HENRY WELLS JR.
7/31/2015
DocuSigned by: W. Henry Wells Jr.

CDM Smith — Camp Dresser & McKee, 5400 Glenwood Avenue, Suite 300, Raleigh, NC 27612-3228, NC COA No. F-0412

SUNGATE DESIGN GROUP, P.A., 915 JONES FRANKLIN ROAD, RALEIGH, NORTH CAROLINA 27606, NC COA No. C-0890

REVISIONS

5/14/99

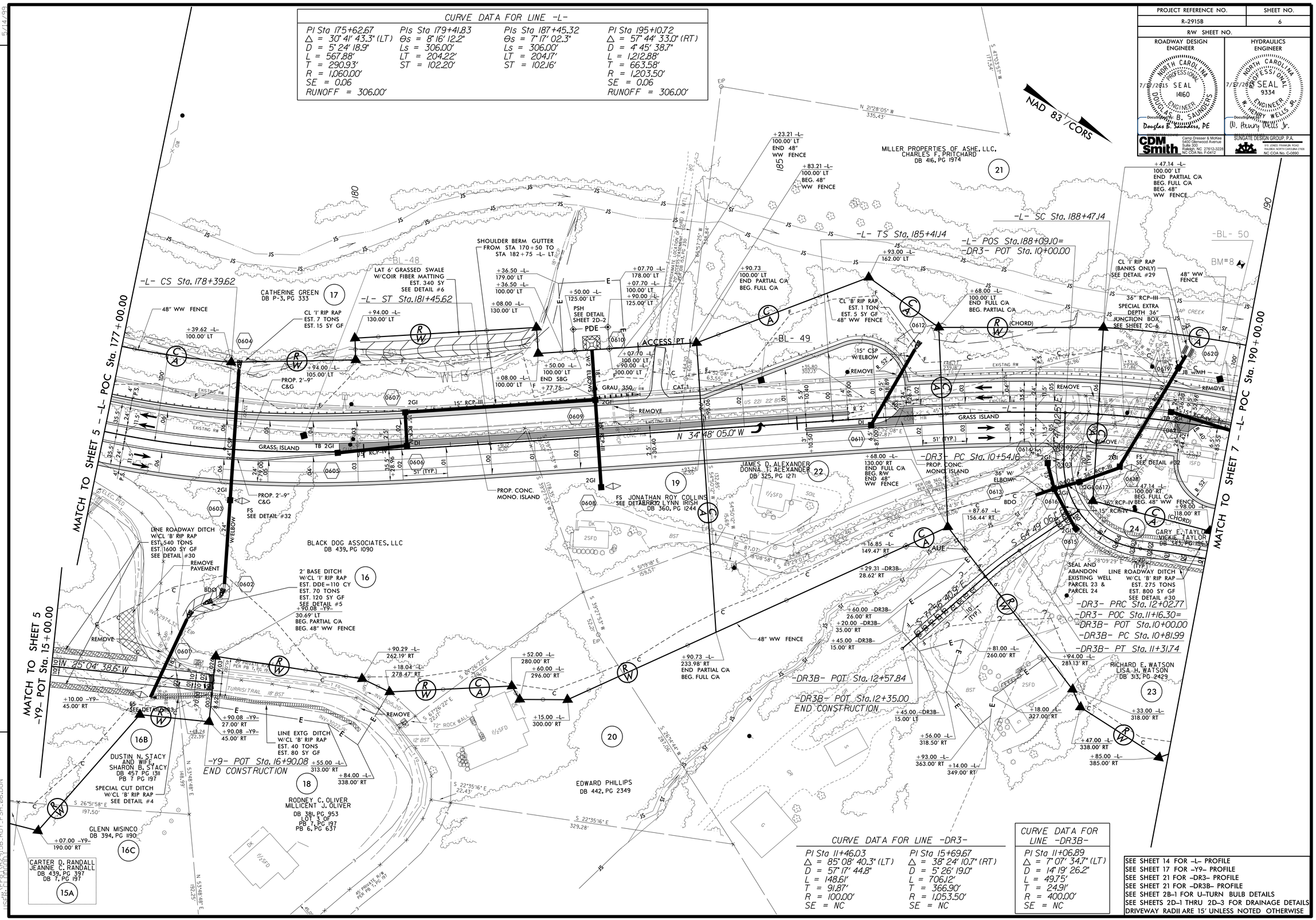

CURVE DATA FOR LINE -L-

PI Sta 175+62.67	PIs Sta 179+41.83	PIs Sta 187+45.32	PI Sta 195+10.72
Δ = 30° 41' 43.3" (LT)	Θs = 8° 16' 12.2"	Θs = 7° 17' 02.3"	Δ = 57° 44' 33.0" (RT)
D = 5° 24' 18.9"	Ls = 306.00'	Ls = 306.00'	D = 4° 45' 38.7"
L = 567.88'	LT = 204.22'	LT = 204.17'	L = 1,212.88'
T = 290.93'	ST = 102.20'	ST = 102.16'	T = 663.58'
R = 1,060.00'			R = 1,203.50'
SE = 0.06			SE = 0.06
RUNOFF = 306.00'			RUNOFF = 306.00'

CURVE DATA FOR LINE -DR3-

PI Sta 11+46.03	PI Sta 15+69.67
Δ = 85° 08' 40.3" (LT)	Δ = 38° 24' 10.7" (RT)
D = 57° 17' 44.8"	D = 5° 26' 19.0"
L = 148.61'	L = 706.12'
T = 91.87'	T = 366.90'
R = 100.00'	R = 1,053.50'
SE = NC	SE = NC

CURVE DATA FOR LINE -DR3B-

PI Sta 11+06.89
Δ = 7° 07' 34.7" (LT)
D = 14° 19' 26.2"
L = 49.75'
T = 24.91'
R = 400.00'
SE = NC

SEE SHEET 14 FOR -L- PROFILE
SEE SHEET 17 FOR -Y9- PROFILE
SEE SHEET 21 FOR -DR3- PROFILE
SEE SHEET 21 FOR -DR3B- PROFILE
SEE SHEET 2B-1 FOR U-TURN BULB DETAILS
SEE SHEETS 2D-1 THRU 2D-3 FOR DRAINAGE DETAILS
DRIVEWAY RADII ARE 15' UNLESS NOTED OTHERWISE

7/16/2015 4:09:36 PM
R:\Roadway\Proj\R2915B_RDY_PSH_06.DGN
USER: T. PARKER

PROJECT REFERENCE NO.	SHEET NO.
R-2915B	7
R/W SHEET NO.	

ROADWAY DESIGN ENGINEER	HYDRAULICS ENGINEER
NORTH CAROLINA PROFESSIONAL SEAL 14160 ENGINEER DOUGLAS B. SAUNDERS — 7/17/2015 — DocuSigned by: Douglas B. Saunders, PE	NORTH CAROLINA PROFESSIONAL SEAL 9334 ENGINEER W. HENRY WELLS JR. — 7/17/2015 — DocuSigned by: W. Henry Wells Jr.
CDM Smith — Camp Dresser & McKee, 5400 Glenwood Avenue, Suite 300, Raleigh, NC 27612-3228, NC COA No. F-0412	SUNGATE DESIGN GROUP, P.A. — 915 Jones Franklin Road, Raleigh, North Carolina 27606, NC COA No. C-0890

CURVE DATA FOR LINE -L-

PIs Sta 187+45.32	PI Sta 195+10.72	PIs Sta 201+03.24	PI Sta 209+61.76
Θs = 7° 17′ 02.3″	△ = 57° 44′ 33.0″ (RT)	Θs = 0° 43′ 22.4″	△ = 21° 27′ 22.7″ (RT)
Ls = 306.00′	D = 4° 45′ 38.7″	Θs = 2° 31′ 24.0″	D = 1° 21′ 51.1″
LT = 204.17′	L = 1,212.88′	Ls = 106.00′	L = 1,572.83′
ST = 102.16′	T = 663.58′	LT = 62.81′	T = 795.74′
	R = 1,203.50′	ST = 43.22′	R = 4,200.00′
	SE = 0.06		SE = 0.04
	RUNOFF = 306.00′		RUNOFF = 212.00′

CURVE DATA FOR LINE -Y10-

PI Sta 14+13.20	PI Sta 16+69.79
△ = 47° 35′ 37.4″ (LT)	△ = 64° 19′ 18.9″ (RT)
D = 28° 38′ 52.4″	D = 38° 11′ 49.9″
L = 166.13′	L = 168.39′
T = 88.20′	T = 94.32′
R = 200.00′	R = 150.00′
SE = 0.06	SE = 0.06
RUNOFF = 90.00′	RUNOFF = 90.00′

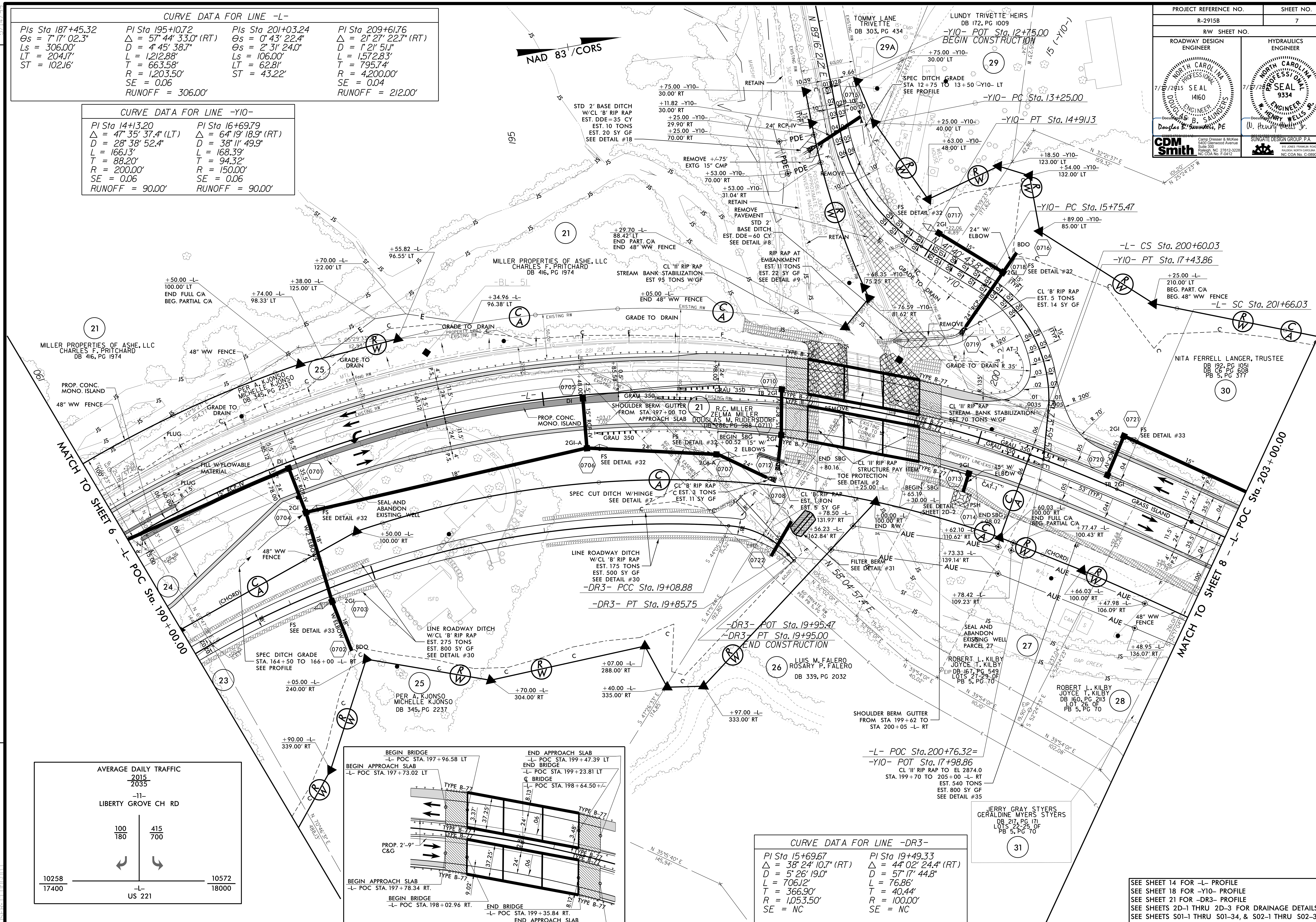

CURVE DATA FOR LINE -DR3-

PI Sta 15+69.67	PI Sta 19+49.33
△ = 38° 24′ 10.7″ (RT)	△ = 44° 02′ 24.4″ (RT)
D = 5° 26′ 19.0″	D = 57° 17′ 44.8″
L = 706.12′	L = 76.86′
T = 366.90′	T = 40.44′
R = 1,053.50′	R = 100.00′
SE = NC	SE = NC

AVERAGE DAILY TRAFFIC

2015 / 2035

-11- LIBERTY GROVE CH RD: 100/180 (left), 415/700 (right)

-L- US 221: 10258/17400 (west), 10572/18000 (east)

SEE SHEET 14 FOR -L- PROFILE
SEE SHEET 18 FOR -Y10- PROFILE
SEE SHEET 21 FOR -DR3- PROFILE
SEE SHEETS 2D-1 THRU 2D-3 FOR DRAINAGE DETAILS
SEE SHEETS S01-1 THRU S01-34, & S02-1 THRU S02-34 FOR STRUCTURE PLANS

REVISIONS

5/14/99

7/16/2015 1:10:09 PM ...R2915B_RDY_PSH_07.DGN

PROJECT REFERENCE NO.	SHEET NO.
R-2915B	8
R/W SHEET NO.	

ROADWAY DESIGN ENGINEER: NORTH CAROLINA PROFESSIONAL SEAL 14160 ENGINEER DOUGLAS B. SAUNDERS — 7/27/2015 — Douglas B. Saunders, PE

HYDRAULICS ENGINEER: NORTH CAROLINA PROFESSIONAL SEAL 9334 ENGINEER W. HENRY WELLS JR. — 7/27/2015 — W. Henry Wells Jr.

CDM Smith — Cam-Dresser & McKee, 5400 Glenwood Avenue, Suite 300, Raleigh, NC 27612-3228, NC COA No. F-0412

SUNGATE DESIGN GROUP, P.A., 915 JONES FRANKLIN ROAD, RALEIGH, NORTH CAROLINA 27606, NC COA No. C-0890

REVISIONS

5/14/99

CURVE DATA FOR LINE -L-

PIs Sta 201+03.24	PI Sta 209+61.76	PIs Sta 218+09.53
Θs = 0° 43' 22.4"	Δ = 21° 27' 22.7" (RT)	Θs = 1° 26' 45.7"
Θs = 2° 31' 24.0"	D = 1° 21' 51.1"	Ls = 212.00'
Ls = 106.00'	L = 1,572.83'	LT = 141.34'
LT = 62.81'	T = 795.74'	ST = 70.67'
ST = 43.22'	R = 4,200.00'	
	SE = 0.04	
	RUNOFF = 212.00'	

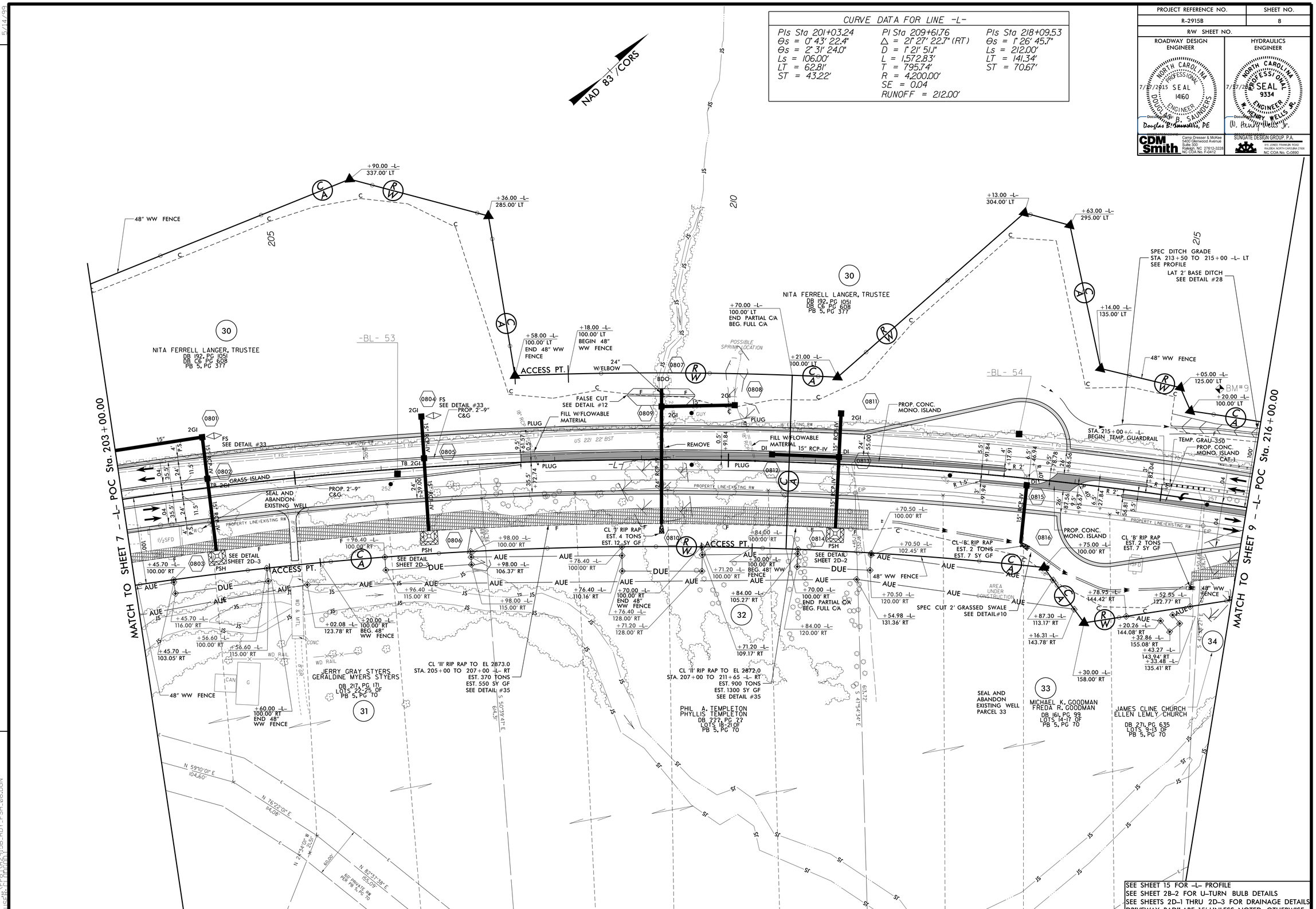

SEE SHEET 15 FOR -L- PROFILE
SEE SHEET 2B-2 FOR U-TURN BULB DETAILS
SEE SHEETS 2D-1 THRU 2D-3 FOR DRAINAGE DETAILS
DRIVEWAY RADII ARE 15' UNLESS NOTED OTHERWISE

7/16/2015 11:29 PM
USER: FRANKLIN
R-2915B_RDY_PSH_08.DGN

PROJECT REFERENCE NO.	SHEET NO.
R-2915B	9
R/W SHEET NO.	

ROADWAY DESIGN ENGINEER
NORTH CAROLINA PROFESSIONAL SEAL 14160 ENGINEER DOUGLAS B. SAUNDERS
7/17/2015
Douglas B. Saunders, PE

HYDRAULICS ENGINEER
NORTH CAROLINA PROFESSIONAL SEAL 9334 ENGINEER W. HENRY WELLS, JR.
7/17/2015
DocuSigned by: W. Henry Wells Jr.

CDM Smith — Camp Dresser & McKee, 5400 Glenwood Avenue, Suite 300, Raleigh, NC 27612-3228, NC COA No. F-0412

SUNGATE DESIGN GROUP, P.A. — 915 JONES FRANKLIN ROAD, RALEIGH, NORTH CAROLINA 27606, NC COA No. C-0890

REVISIONS

5/14/99

CURVE DATA FOR LINE -L-

PI Sta 209+61.76	PIs Sta 218+09.53	PIs Sta 222+90.96	PI Sta 227+31.63
△ = 21° 27' 22.7" (RT)	Θs = 1° 26' 45.7"	Θs = 6° 19' 27.0"	△ = 37° 47' 10.6" (LT)
D = 1° 21' 51.1"	Ls = 212.00'	Ls = 234.00'	D = 5° 24' 18.9"
L = 1,572.83'	LT = 141.34'	LT = 156.10'	L = 699.06'
T = 795.74'	ST = 70.67'	ST = 78.09'	T = 362.78'
R = 4,200.00'			R = 1,060.00'
SE = 0.04			SE = 0.06
RUNOFF = 212.00'			RUNOFF = 234.00'

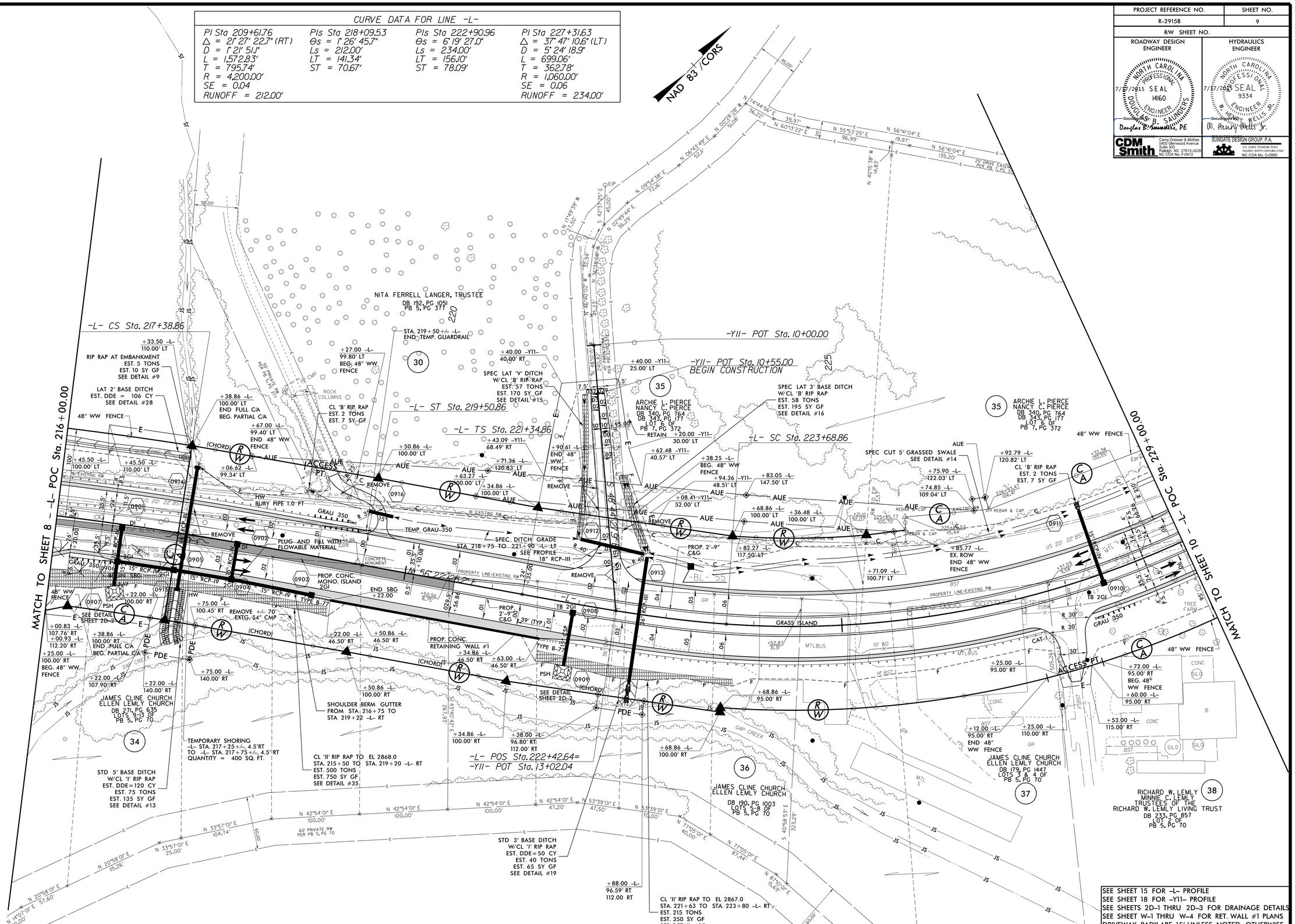

SEE SHEET 15 FOR -L- PROFILE
SEE SHEET 18 FOR -Y11- PROFILE
SEE SHEETS 2D-1 THRU 2D-3 FOR DRAINAGE DETAILS
SEE SHEET W-1 THRU W-4 FOR RET. WALL #1 PLANS
DRIVEWAY RADII ARE 15' UNLESS NOTED OTHERWISE

6/26/2015 2:40:00 PM
C:\Projects\R2915B_RDY_PSH_09.DGN
USER: sdavis

PROJECT REFERENCE NO.	SHEET NO.
R-2915B	10
R/W SHEET NO.	

ROADWAY DESIGN ENGINEER
7/17/2015 SEAL 14160 NORTH CAROLINA PROFESSIONAL ENGINEER DOUGLAS B. SAUNDERS
Douglas B. Saunders, PE

HYDRAULICS ENGINEER
7/17/2015 SEAL 9334 NORTH CAROLINA PROFESSIONAL ENGINEER W. HENRY WELLS JR.
W. Henry Wells Jr.

CDM Smith — Camp Dresser & McKee, 5400 Glenwood Avenue, Suite 300, Raleigh, NC 27612-3228, NC COA No. F-0412

SUNGATE DESIGN GROUP, P.A. — 915 JONES FRANKLIN ROAD, RALEIGH, NORTH CAROLINA 27606, NC COA No. C-0890

REVISIONS

5/14/99

CURVE DATA FOR LINE -L-		
PIs Sta 222+90.96 Θs = 6° 19' 27.0" Ls = 234.00' LT = 156.10' ST = 78.09'	PI Sta 227+31.63 Δ = 37° 47' 10.6" (LT) D = 5° 24' 18.9" L = 699.06' T = 362.78' R = 1,060.00' SE = 0.06 RUNOFF = 234.00'	PIs Sta 231+46.01 Θs = 6° 19' 27.0" Ls = 234.00' LT = 156.10' ST = 78.09'

CURVE DATA FOR LINE -Y12-		
PI Sta 10+85.51 Δ = 3° 45' 26.2" (LT) D = 5° 59' 58.4" L = 62.63' T = 31.32' R = 955.00' SE = EX.	PI Sta 12+57.23 Δ = 6° 27' 50.5" (RT) D = 6° 59' 14.2" L = 92.51' T = 46.30' R = 820.00' SE = EX.	PI Sta 13+87.10 Δ = 26° 01' 36.3" (LT) D = 30° 09' 20.4" L = 86.31' T = 43.91' R = 190.00' SE = 0.05 RUNOFF = 70.00'

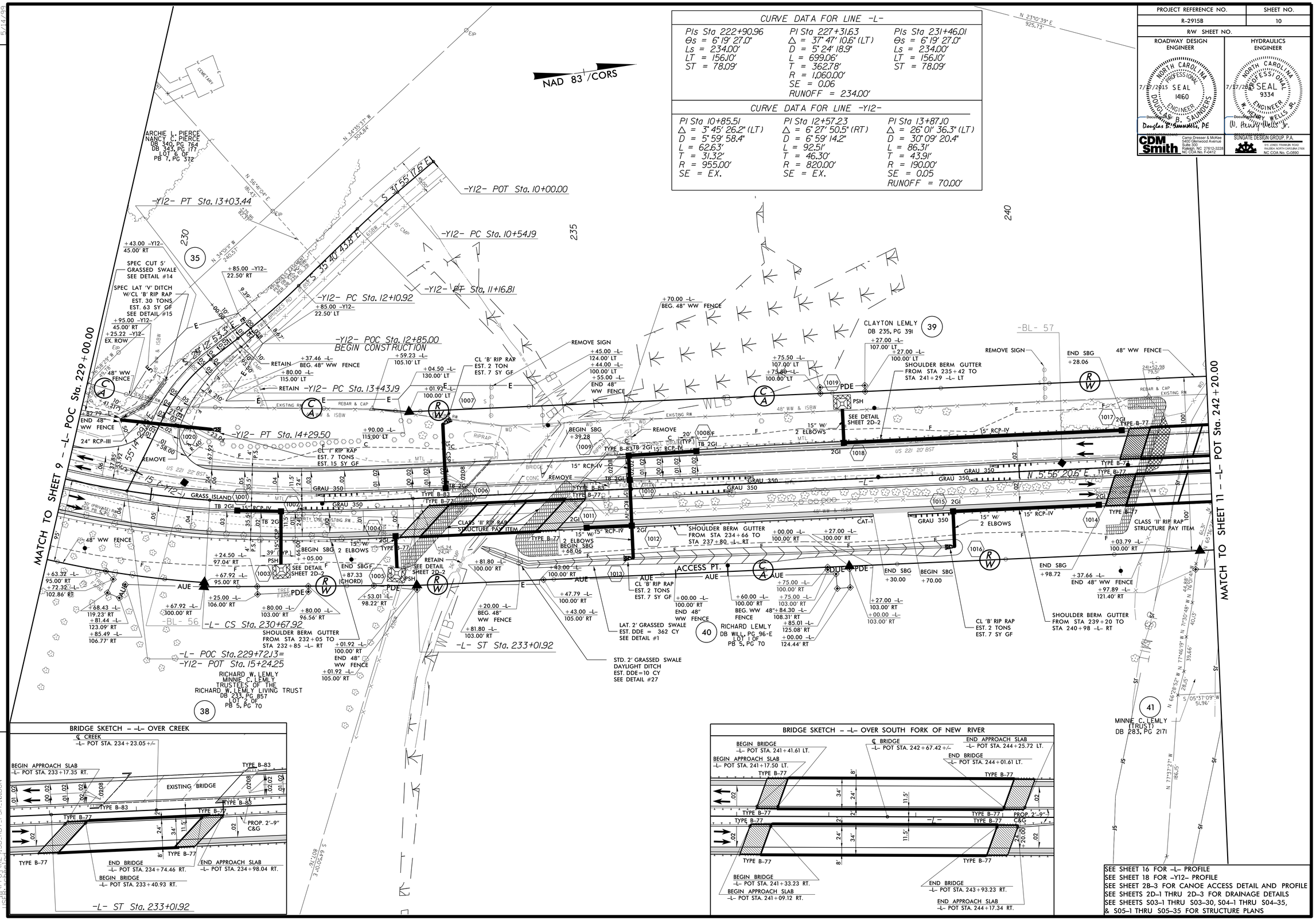

BRIDGE SKETCH - -L- OVER CREEK

BRIDGE SKETCH - -L- OVER SOUTH FORK OF NEW RIVER

SEE SHEET 16 FOR -L- PROFILE
SEE SHEET 18 FOR -Y12- PROFILE
SEE SHEET 2B-3 FOR CANOE ACCESS DETAIL AND PROFILE
SEE SHEETS 2D-1 THRU 2D-3 FOR DRAINAGE DETAILS
SEE SHEETS S03-1 THRU S03-30, S04-1 THRU S04-35, & S05-1 THRU S05-35 FOR STRUCTURE PLANS

6/26/2015 2:40:06 PM
USER: sgaines
DGN: R2915B_RDY_PSH_10.DGN

PROJECT REFERENCE NO.	SHEET NO.
R-2915B	11
R/W SHEET NO.	

ROADWAY DESIGN ENGINEER: NORTH CAROLINA PROFESSIONAL SEAL 14160 ENGINEER — 7/27/2015 — Douglas B. Saunders, PE

HYDRAULICS ENGINEER: NORTH CAROLINA PROFESSIONAL SEAL 9334 ENGINEER — 7/27/2015 — W. Henry Wells Jr.

CDM Smith — Camp Dresser & McKee, 5400 Glenwood Avenue, Suite 300, Raleigh, NC 27612-3228, NC COA No. F-0412

SUNGATE DESIGN GROUP, P.A., 915 JONES FRANKLIN ROAD, RALEIGH, NORTH CAROLINA 27606, NC COA No. C-0890

CURVE DATA FOR LINE -DET-		
PIs Sta 252+78.02	PI Sta 253+98.59	PIs Sta 255+16.15
Θs = 0° 54' 39.6"	Δ = 1° 32' 54.7" (LT)	Θs = 0° 51' 34.0"
Ls = 159.00'	D = 1° 08' 45.3"	Ls = 150.00'
LT = 106.00'	L = 135.14'	LT = 100.00'
ST = 53.00'	T = 67.57'	ST = 50.00'
	R = 5,000.00'	
	SE = 0.03	
	RUNOFF 1 = 159.00'	
	RUNOFF 2 = 150.00'	

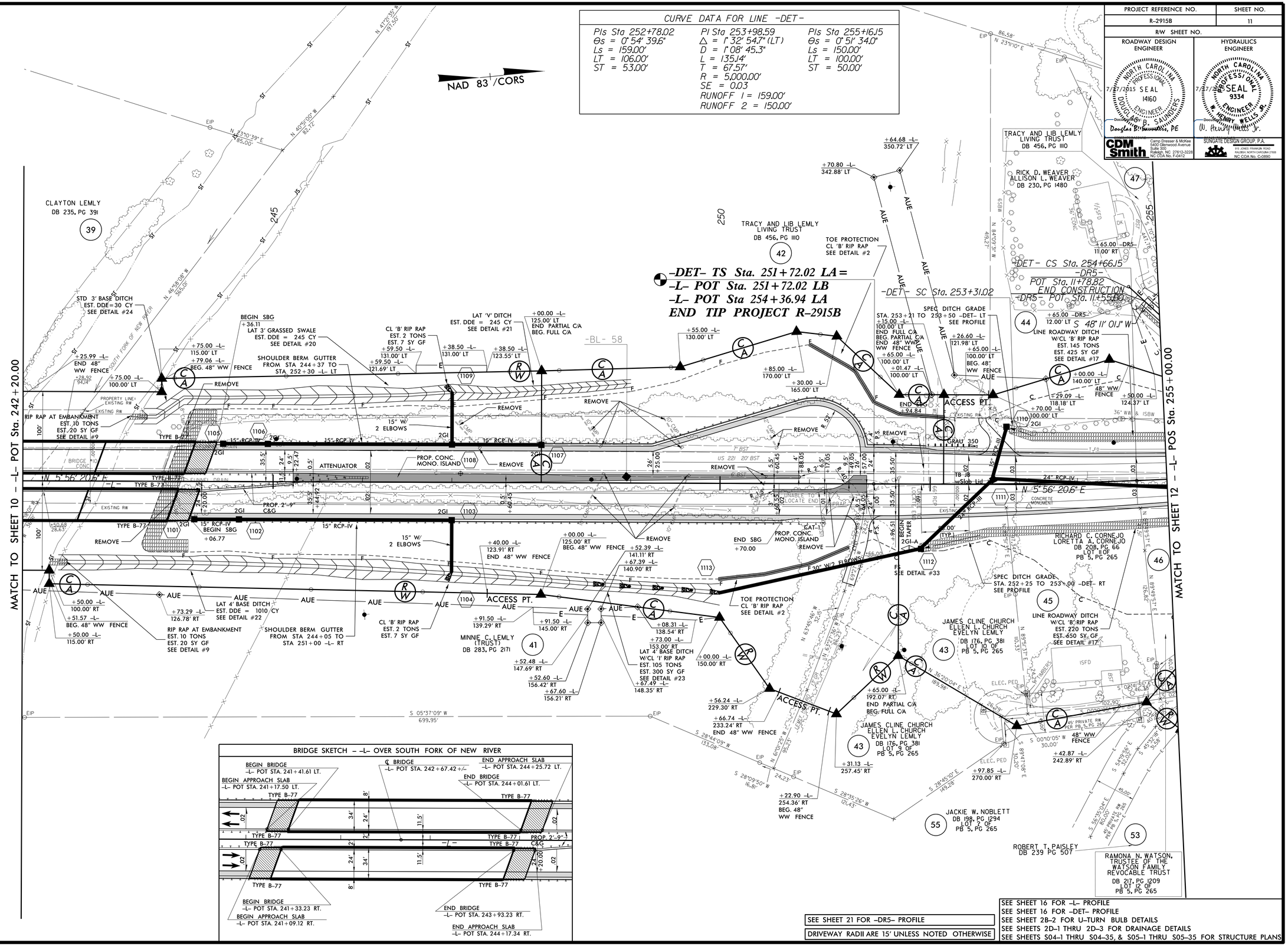

SEE SHEET 21 FOR –DR5– PROFILE

DRIVEWAY RADII ARE 15' UNLESS NOTED OTHERWISE

SEE SHEET 16 FOR –L– PROFILE
SEE SHEET 16 FOR –DET– PROFILE
SEE SHEET 2B-2 FOR U-TURN BULB DETAILS
SEE SHEETS 2D-1 THRU 2D-3 FOR DRAINAGE DETAILS
SEE SHEETS S04-1 THRU S04-35, & S05-1 THRU S05-35 FOR STRUCTURE PLANS

REVISIONS

6/26/2015 2:27:25 PM
USER: sdavis
FILE: R-2915B_RDY_PSH_11.DGN

PROJECT REFERENCE NO.	SHEET NO.
R-2915B	12
R/W SHEET NO.	

ROADWAY DESIGN ENGINEER

NORTH CAROLINA PROFESSIONAL SEAL 14160 ENGINEER DOUGLAS B. SAUNDERS

7/17/2015

DocuSigned by: Douglas B. Saunders, PE

HYDRAULICS ENGINEER

NORTH CAROLINA PROFESSIONAL SEAL 9334 ENGINEER W. HENRY WELLS JR.

7/17/2015

DocuSigned by: W. Henry Wells Jr.

CDM Smith — Camp Dresser & McKee, 5400 Glenwood Avenue, Suite 300, Raleigh, NC 27612-3228, NC COA No. F-0412

SUNGATE DESIGN GROUP, P.A. — 915 JONES FRANKLIN ROAD, RALEIGH, NORTH CAROLINA 27606, NC COA No. C-0890

REVISIONS

5/14/99

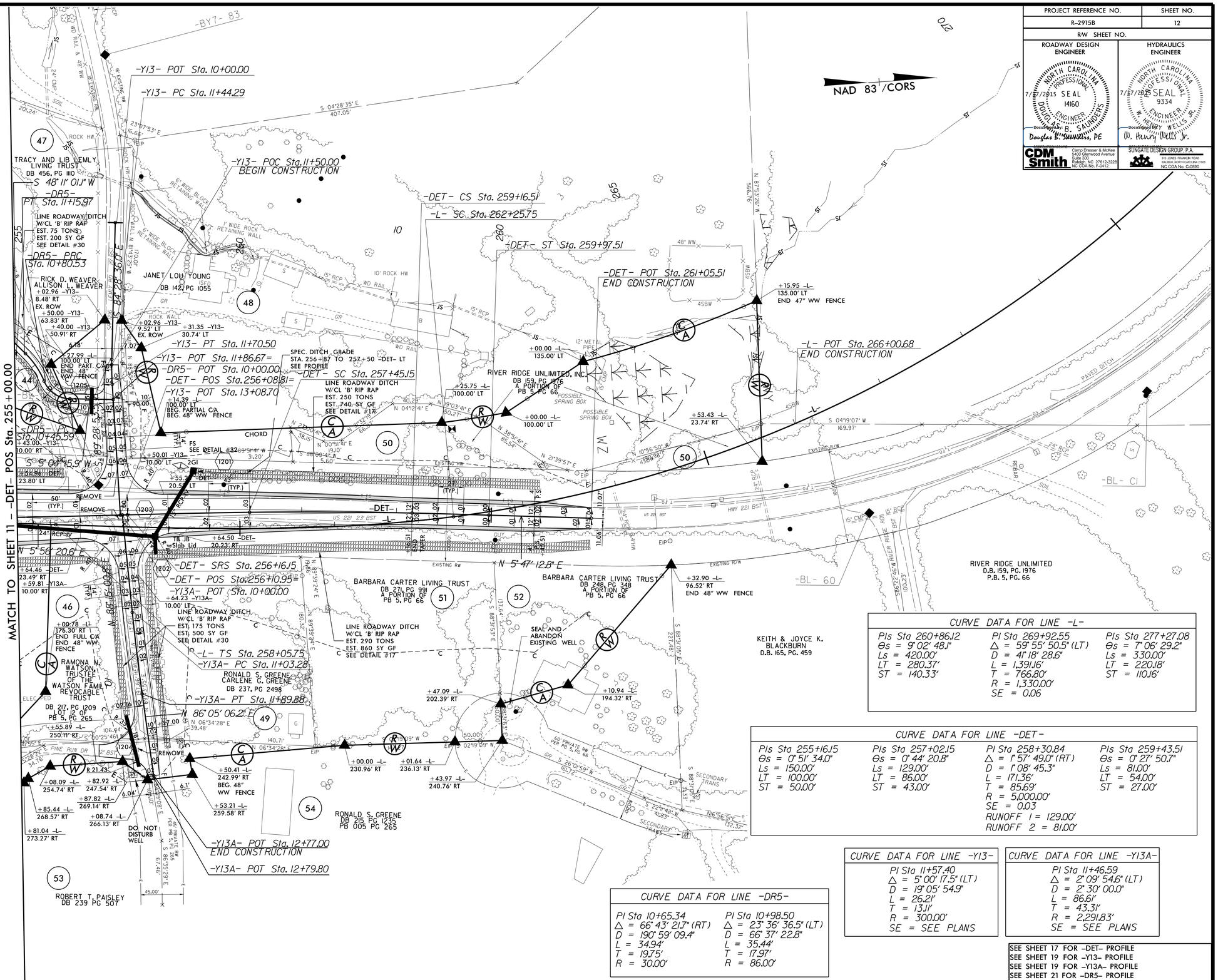

CURVE DATA FOR LINE -L-		
PIs Sta 260+86.12	PI Sta 269+92.55	PIs Sta 277+27.08
Θs = 9° 02' 48.1"	Δ = 59° 55' 50.5" (LT)	Θs = 7° 06' 29.2"
Ls = 420.00'	D = 4° 18' 28.6"	Ls = 330.00'
LT = 280.37'	L = 1,391.16'	LT = 220.18'
ST = 140.33'	T = 766.80'	ST = 110.16'
	R = 1,330.00'	
	SE = 0.06	

CURVE DATA FOR LINE -DET-			
PIs Sta 255+16.15	PIs Sta 257+02.15	PI Sta 258+30.84	PIs Sta 259+43.51
Θs = 0° 51' 34.0"	Θs = 0° 44' 20.8"	Δ = 1° 57' 49.0" (RT)	Θs = 0° 27' 50.7"
Ls = 150.00'	Ls = 129.00'	D = 1° 08' 45.3"	Ls = 81.00'
LT = 100.00'	LT = 86.00'	L = 171.36'	LT = 54.00'
ST = 50.00'	ST = 43.00'	T = 85.69'	ST = 27.00'
		R = 5,000.00'	
		SE = 0.03	
		RUNOFF 1 = 129.00'	
		RUNOFF 2 = 81.00'	

CURVE DATA FOR LINE -DR5-	
PI Sta 10+65.34	PI Sta 10+98.50
Δ = 66° 43' 21.7" (RT)	Δ = 23° 36' 36.5" (LT)
D = 190° 59' 09.4"	D = 66° 37' 22.8"
L = 34.94'	L = 35.44'
T = 19.75'	T = 17.97'
R = 30.00'	R = 86.00'

CURVE DATA FOR LINE -Y13-
PI Sta 11+57.40
Δ = 5° 00' 17.5" (LT)
D = 19° 05' 54.9"
L = 26.21'
T = 13.11'
R = 300.00'
SE = SEE PLANS

CURVE DATA FOR LINE -Y13A-
PI Sta 11+46.59
Δ = 2° 09' 54.6" (LT)
D = 2° 30' 00.0"
L = 86.61'
T = 43.31'
R = 2,291.83'
SE = SEE PLANS

SEE SHEET 17 FOR –DET– PROFILE
SEE SHEET 19 FOR –Y13– PROFILE
SEE SHEET 19 FOR –Y13A– PROFILE
SEE SHEET 21 FOR –DR5– PROFILE
SEE SHEETS 2D-1 THRU 2D-2 FOR DRAINAGE DETAILS
DRIVEWAY RADII ARE 15' UNLESS NOTED OTHERWISE

7/16/2015 4:12:53 PM
USER: FT CMDOT
DGN: R-2915B_RDY_PSH_12.DGN

PROJECT REFERENCE NO.	SHEET NO.
R-2915B	13

ROADWAY DESIGN ENGINEER
NORTH CAROLINA PROFESSIONAL SEAL 14160 ENGINEER DOUGLAS B. SAUNDERS
7/31/2015
DocuSigned by: Douglas B. Saunders, PE

HYDRAULICS ENGINEER
NORTH CAROLINA PROFESSIONAL SEAL 9334 ENGINEER W. HENRY WELLS JR.
7/31/2015
DocuSigned by: W. Henry Wells Jr.

CDM Smith
Cons Dresser & McKee
5400 Glenwood Avenue
Suite 300
Raleigh, NC 27612-3228
NC COA No. F-0412

SUNGATE DESIGN GROUP, P.A.
915 JONES FRANKLIN ROAD
RALEIGH, NORTH CAROLINA 27606
NC COA No. C-0890

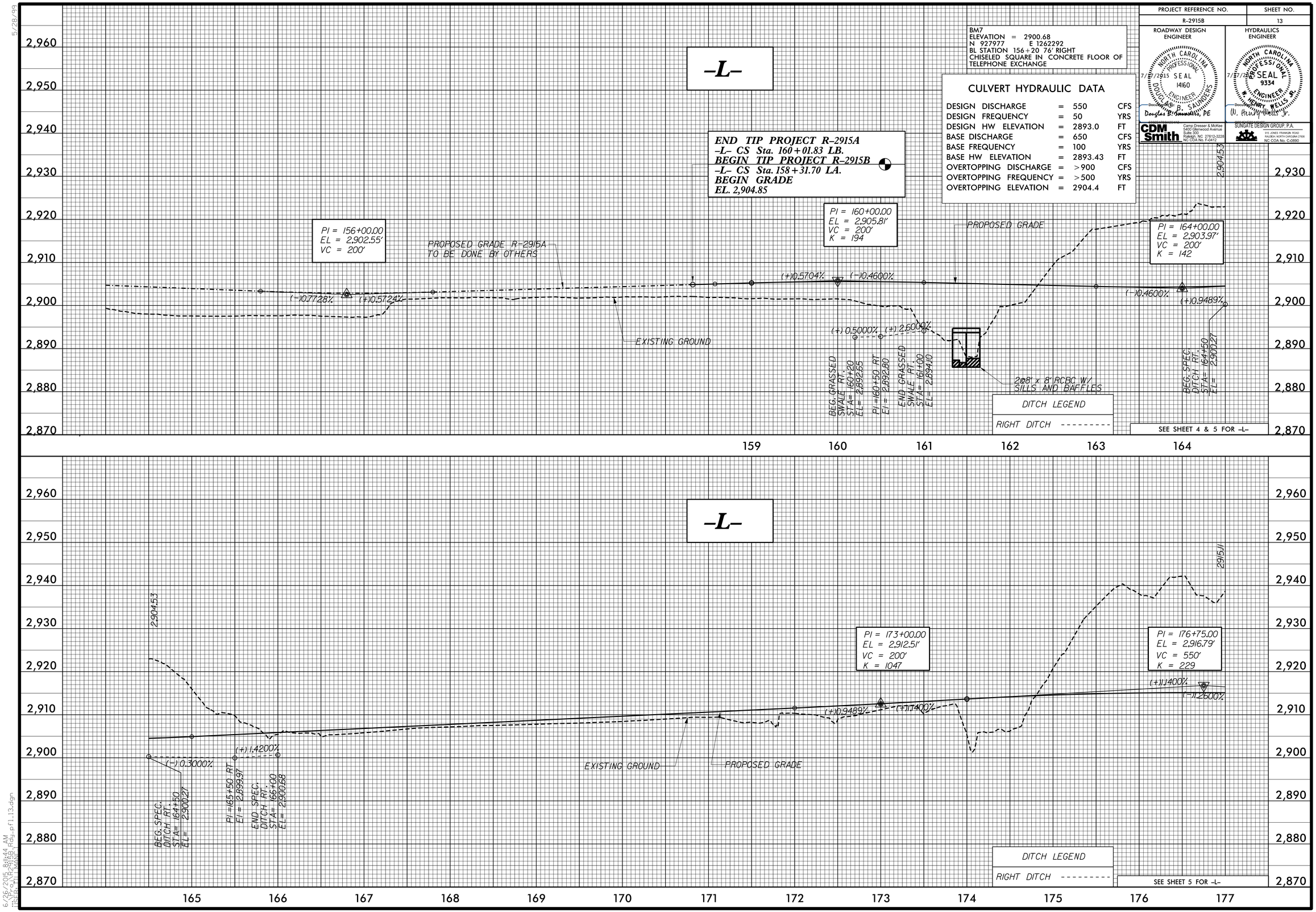

5/28/99

6/26/2015 8:14:44 AM
R:\Roadway\Proj\R2915B_rdy_pfl_13.dgn
USER: gjillespie

PROJECT REFERENCE NO.	SHEET NO.
R-2915B	14

ROADWAY DESIGN ENGINEER
NORTH CAROLINA PROFESSIONAL SEAL 14160 ENGINEER DOUGLAS B. SAUNDERS
7/27/2015
DocuSigned by: Douglas B. Saunders, PE

HYDRAULICS ENGINEER
NORTH CAROLINA PROFESSIONAL SEAL 9334 ENGINEER W. HENRY WELLS JR.
7/27/2015
DocuSigned by: W. Henry Wells Jr.

CDM Smith — Camp Dresser & McKee, 5400 Glenwood Avenue, Suite 300, Raleigh, NC 27612-3228, NC COA No. F-0412

SUNGATE DESIGN GROUP, P.A., 915 JONES FRANKLIN ROAD, RALEIGH, NORTH CAROLINA 27606, NC COA No. C-0890

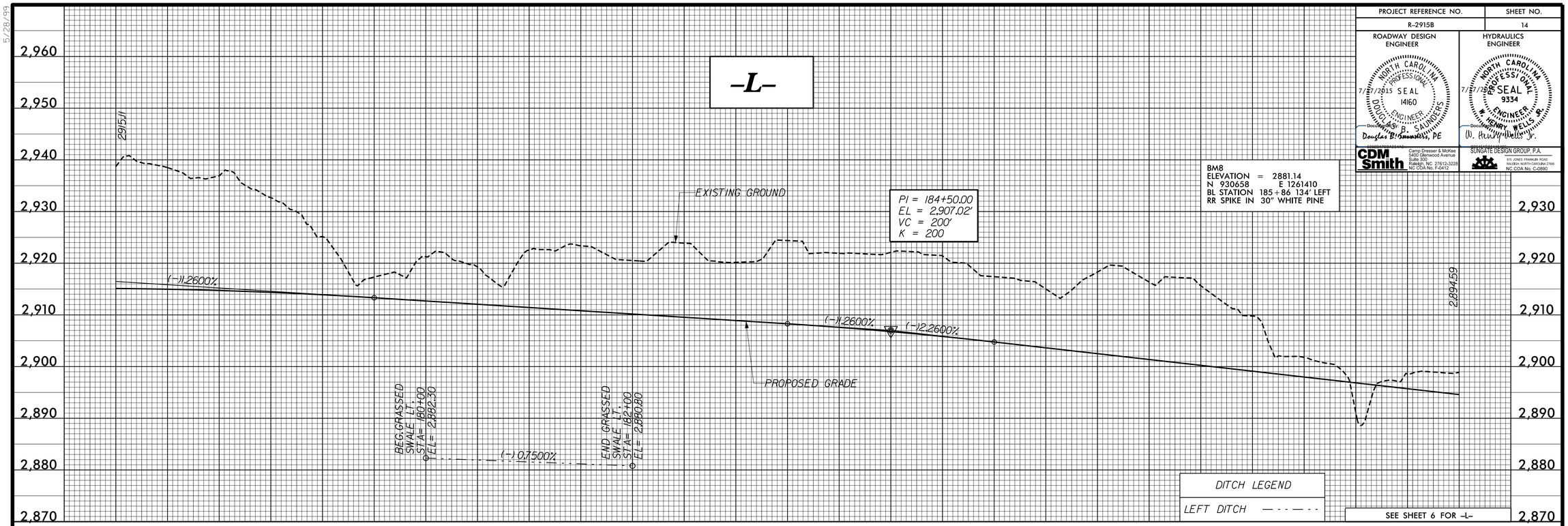

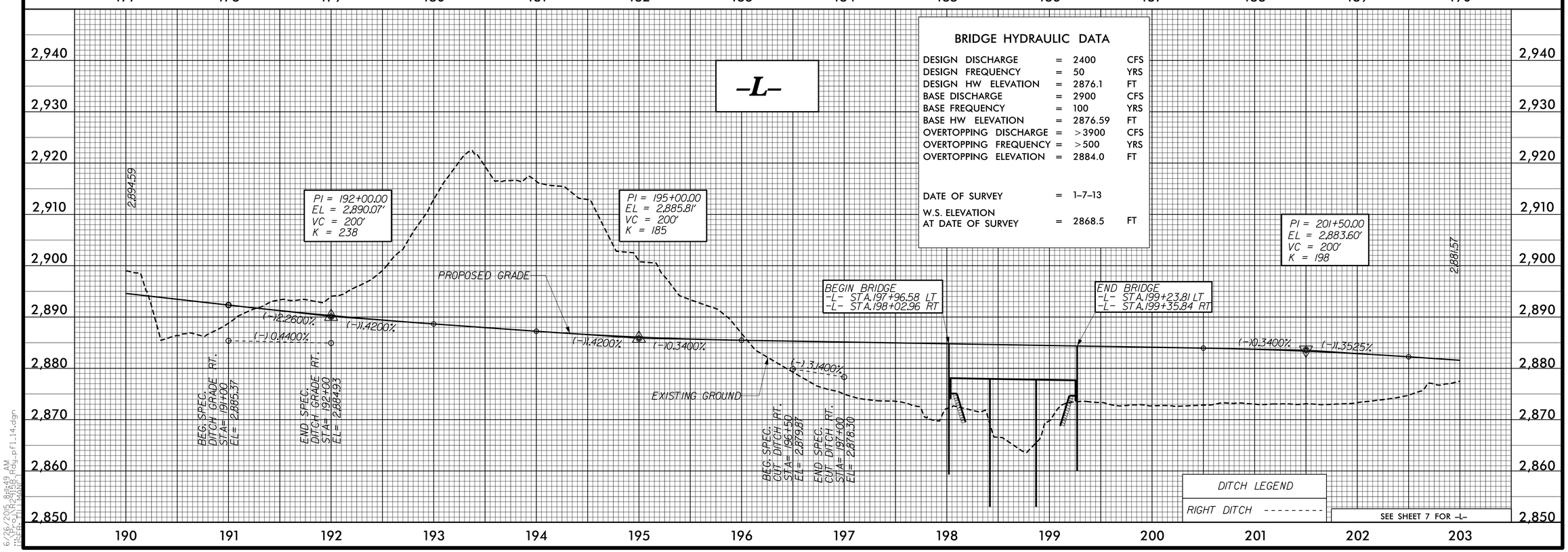

BRIDGE HYDRAULIC DATA

DESIGN DISCHARGE	=	2400	CFS
DESIGN FREQUENCY	=	50	YRS
DESIGN HW ELEVATION	=	2876.1	FT
BASE DISCHARGE	=	2900	CFS
BASE FREQUENCY	=	100	YRS
BASE HW ELEVATION	=	2876.59	FT
OVERTOPPING DISCHARGE	=	>3900	CFS
OVERTOPPING FREQUENCY	=	>500	YRS
OVERTOPPING ELEVATION	=	2884.0	FT
DATE OF SURVEY	=	1-7-13	
W.S. ELEVATION AT DATE OF SURVEY	=	2868.5	FT

5/28/99

6/26/2015 8:19:43 AM
R:\Roadway\Proj\2915B_Rdy_pfl_14.dgn
USER: ahill MAP: 1"=5'

PROJECT REFERENCE NO.	SHEET NO.
R-2915B	15

ROADWAY DESIGN ENGINEER
NORTH CAROLINA PROFESSIONAL SEAL 14160 ENGINEER DOUGLAS B. SAUNDERS
7/27/2015
DocuSigned by: Douglas B. Saunders, PE

HYDRAULICS ENGINEER
NORTH CAROLINA PROFESSIONAL SEAL 9334 ENGINEER W. HENRY WELLS JR.
7/27/2015
DocuSigned by: W. Henry Wells Jr.

CDM Smith
Camp Dresser & McKee
5400 Glenwood Avenue
Suite 300
Raleigh, NC 27612-3228
NC COA No. F-0412

SUNGATE DESIGN GROUP, P.A.
915 JONES FRANKLIN ROAD
RALEIGH, NORTH CAROLINA 27606
NC COA No. C-0890

-L-

BM9
ELEVATION = 2871.28
N 932968 E 1262584
BL STATION 212+19 91' LEFT
RR SPIKE IN ROOT OF 24" FORKED CHERRY TREE

2,881.57

PI = 205+50.00
EL = 2,878.19'
VC = 200'
K = 240

(-)1.3525%

(-)0.5200%

PROPOSED GRADE

EXISTING GROUND

PI = 211+00.00
EL = 2,875.33'
VC = 200'
K = 244

(-)0.5200%

(+)0.3000%

BEG. GRASSED SWALE RT.
STA= 211+80
EL= 2,871.00

PI = 213+00.00
EL = 2,875.93'
VC = 200'
K = 152

(+)0.3000%

(-)1.0200%

BEG. SPEC. DITCH GRADE LT
STA= 213+50
EL= 2,876.33

(-)1.0200%

(-)5.6867%

(-)1.6000%

END GRASSED SWALE RT.
STA= 215+55
EL= 2,865.00

PI = 215+00.00
EL = 2,873.89'
VC = 200'
K = 417

END DITCH GRADE
BEG. SWALE
STA= 215+00 LT
EL= 2,867.8

(-)0.5400%

(-)4.0000%

2,873.35

DITCH LEGEND
RIGHT DITCH - - - - - - - - -
LEFT DITCH — - - — - -

SEE SHEET 8 FOR -L-

203 204 205 206 207 208 209 210 211 212 213 214 215 216

2,940 2,930 2,920 2,910 2,900 2,890 2,880 2,870 2,860 2,850

-L-

2,873.35

PIPE HYDRAULIC DATA
60" RCP Sta. 217+48 -L-

DRAINAGE AREA	= 93	AC
DESIGN FREQUENCY	= 50	YRS
DESIGN DISCHARGE	= 100	CFS
DESIGN HW ELEVATION	= 2863.6	FT
100 YEAR DISCHARGE	= 120	CFS
100 YEAR HW ELEVATION	= 2864.3	FT
OVERTOPPING FREQUENCY	= 500 +	YRS
OVERTOPPING DISCHARGE	= 180 +	CFS
OVERTOPPING ELEVATION	= 2870	FT

END GRADE BK. @ ℄ -L-
Sta. 220+56.86 - EL = 2,873.48'
BEG. GRADE AH. @ MEDIAN EOP
Sta. 220+56.86 - EL = 2,873.25'

PI = 218+00.00
EL = 2,872.27'
VC = 200'
K = 198

(-)0.5400%

(+)0.4711%

(+)0.4711%

(+)0.4708%

(+) 0.4000%

(-)1.0526%

(-)2.0000%

PI = 216+50 LT
EL = 2,861.80

END GRASSED SWALE LT
STA= 217+40
EL= 2,860.00

BEG. SPEC. DITCH GRADE LT
PI = 218+75
EL = 2,869.50

BEG. SPEC. DITCH GRADE LT
PI = 220+00
EL = 2,873.00

END SPEC. DITCH GRADE LT
PI = 221+90
EL = 2,868.00

BEG. GRASSED SWALE LT.
PI = 222+59
EL = 2,867.00

PI = 223+50 LT
EL = 2,869.8

PI = 224+50 LT
EL = 2,865.5

PIPE HYDRAULIC DATA
36" RCP Sta. 222+69 -L-

DRAINAGE AREA	= 13.1	AC
DESIGN FREQUENCY	= 50	YRS
DESIGN DISCHARGE	= 34	CFS
DESIGN HW ELEVATION	= 2869.7	FT
100 YEAR DISCHARGE	= 37	CFS
100 YEAR HW ELEVATION	= 2869.9	FT
OVERTOPPING FREQUENCY	= 100	YRS
OVERTOPPING DISCHARGE	= 37	CFS
OVERTOPPING ELEVATION	= 2869.9	FT

PI = 223+50.00
EL = 2,874.63'
VC = 200'
K = 244

EXISTING GROUND

PROPOSED GRADE

(+)0.4708%

(-)0.3480%

(+) 3.4568%

(-)4.3000%

(-)0.7000%

2,872.60

PI = 228+50.00
EL = 2,872.89'
VC = 200'
K = 943

(-)0.3480%

(-)0.5600%

DITCH LEGEND
RIGHT DITCH - - - - - - - - -

SEE SHEET 9 FOR -L-

216 217 218 219 220 221 222 223 224 225 226 227 228 229

2,940 2,930 2,920 2,910 2,900 2,890 2,880 2,870 2,860 2,850

5/28/99

6/26/2015 8:15:54 AM
R:\Roadway\Proj\R2915B_RDY_PFL_15.DGN
USER: gillilandmw

PROJECT REFERENCE NO.	SHEET NO.
R-2915B	16

ROADWAY DESIGN ENGINEER

NORTH CAROLINA PROFESSIONAL SEAL 14160 ENGINEER DOUGLAS B. SAUNDERS

7/31/2015

Douglas B. Saunders, PE

HYDRAULICS ENGINEER

NORTH CAROLINA PROFESSIONAL SEAL 9334 ENGINEER W. HENRY WELLS JR.

7/31/2015

W. Henry Wells Jr.

CDM Smith — Cairo Dresser & McKee, 5400 Glenwood Avenue, Suite 300, Raleigh, NC 27612-3228, NC COA No. F-0412

SUNGATE DESIGN GROUP, P.A., 915 JONES FRANKLIN ROAD, RALEIGH, NORTH CAROLINA 27606, NC COA No. C-0890

BRIDGE HYDRAULIC DATA

DESIGN DISCHARGE	=	16,000	CFS
DESIGN FREQUENCY	=	50	YRS
DESIGN HW ELEVATION	=	2,862.9	FT
BASE DISCHARGE	=	19,000	CFS
BASE FREQUENCY	=	100	YRS
BASE HW ELEVATION	=	2,863.73	FT
OVERTOPPING DISCHARGE	=	24,000+	CFS
OVERTOPPING FREQUENCY	=	500+	YRS
OVERTOPPING ELEVATION	=	2,869.2	FT
DATE OF SURVEY	=	3-19-13	
W.S. ELEVATION AT DATE OF SURVEY	=	N/A	FT

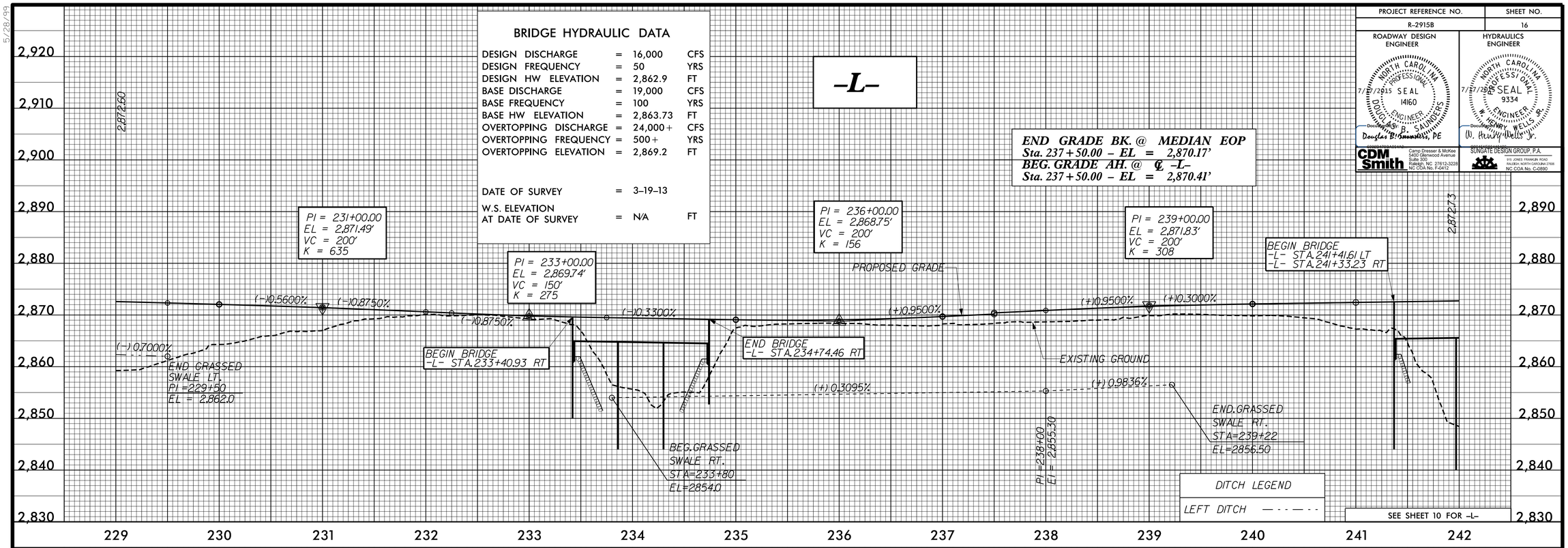

BRIDGE HYDRAULIC DATA

DESIGN DISCHARGE	=	16,000	CFS
DESIGN FREQUENCY	=	50	YRS
DESIGN HW ELEVATION	=	2,862.9	FT
BASE DISCHARGE	=	19,000	CFS
BASE FREQUENCY	=	100	YRS
BASE HW ELEVATION	=	2,863.73	FT
OVERTOPPING DISCHARGE	=	24,000+	CFS
OVERTOPPING FREQUENCY	=	500+	YRS
OVERTOPPING ELEVATION	=	2,869.2	FT
DATE OF SURVEY	=	3-19-13	
W.S. ELEVATION AT DATE OF SURVEY	=	2,850.3	FT

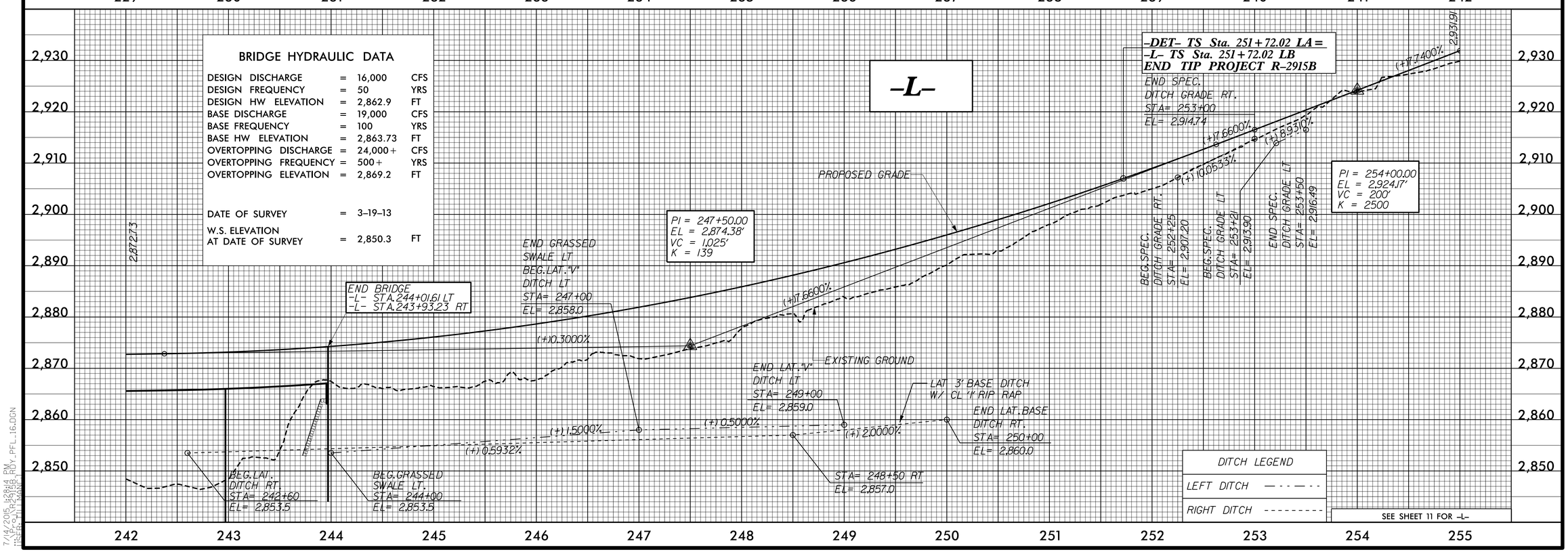

5/28/99

7/16/2015 1:28:16 PM
USER: rbhill
MODEL: R-2915B_RDY_PFL_16.DGN

PROJECT REFERENCE NO.	SHEET NO.
R-2915B	17

ROADWAY DESIGN ENGINEER
NORTH CAROLINA PROFESSIONAL SEAL 14160 ENGINEER DOUGLAS B. SAUNDERS
7/27/2015
DocuSigned by: Douglas B. Saunders, PE

HYDRAULICS ENGINEER
NORTH CAROLINA PROFESSIONAL SEAL 9334 ENGINEER W. HENRY WELLS JR.
7/27/2015
DocuSigned by: W. Henry Wells Jr.

CDM Smith — Camp Dresser & McKee, 5400 Glenwood Avenue, Suite 300, Raleigh, NC 27612-3228, NC COA No. F-0412

SUNGATE DESIGN GROUP, P.A., 915 JONES FRANKLIN ROAD, RALEIGH, NORTH CAROLINA 27606, NC COA No. C-0890

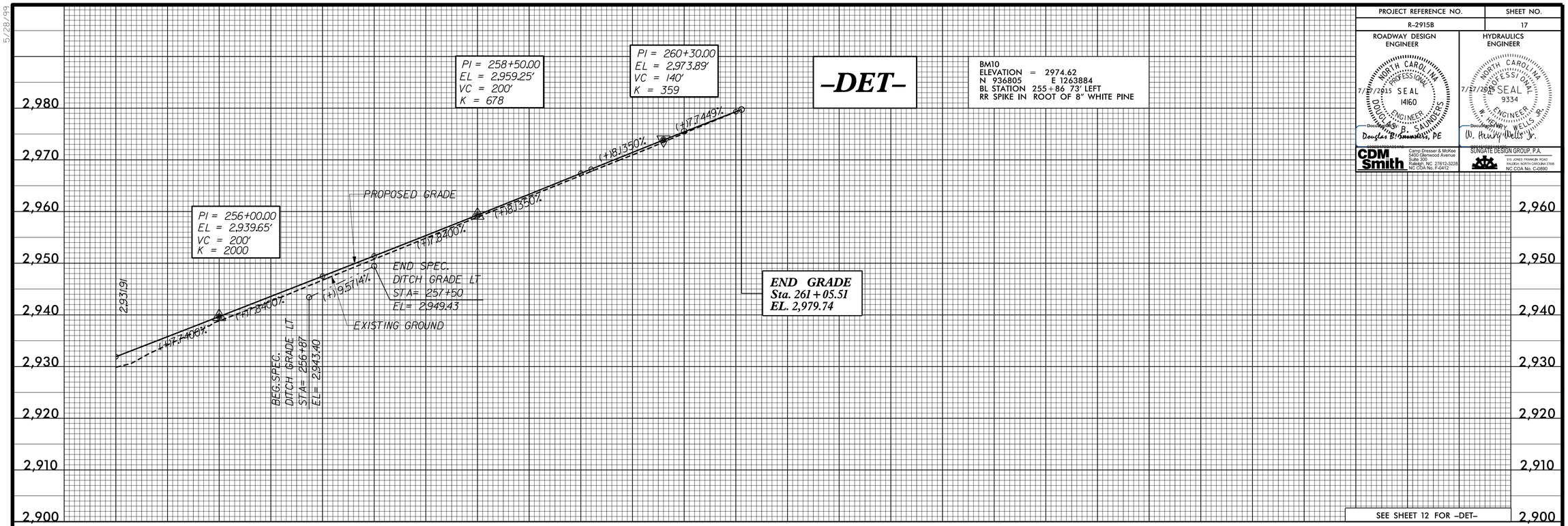

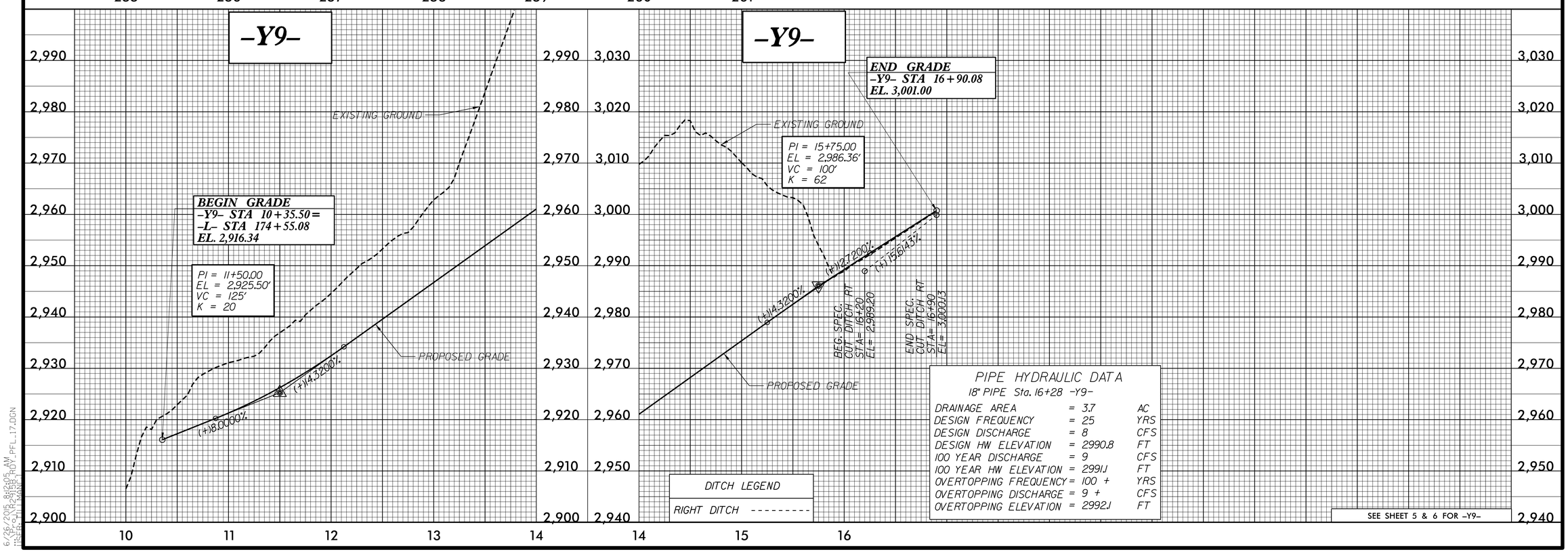

PIPE HYDRAULIC DATA
18" PIPE Sta. 16+28 -Y9-

DRAINAGE AREA	= 3.7	AC
DESIGN FREQUENCY	= 25	YRS
DESIGN DISCHARGE	= 8	CFS
DESIGN HW ELEVATION	= 2990.8	FT
100 YEAR DISCHARGE	= 9	CFS
100 YEAR HW ELEVATION	= 2991.1	FT
OVERTOPPING FREQUENCY	= 100 +	YRS
OVERTOPPING DISCHARGE	= 9 +	CFS
OVERTOPPING ELEVATION	= 2992.1	FT

5/28/99

6/26/2015 8:10:05 AM
R:\Hydro\R2915B\Roadway\PFL\R2915B_PFL_17.DGN
USER: gwilliams
MARK 1

PROJECT REFERENCE NO.	SHEET NO.
R-2915B	18

ROADWAY DESIGN ENGINEER
7/31/2015 SEAL 14160 NORTH CAROLINA PROFESSIONAL ENGINEER DOUGLAS B. SAUNDERS
Douglas B. Saunders, PE

HYDRAULICS ENGINEER
7/31/2015 SEAL 9334 NORTH CAROLINA PROFESSIONAL ENGINEER W. HENRY WELLS JR.
W. Henry Wells Jr.

CDM Smith — Cairo Dresser & McKee, 5400 Glenwood Avenue, Suite 300, Raleigh, NC 27612-3228, NC COA No. F-0412

SUNGATE DESIGN GROUP, P.A., 915 JONES FRANKLIN ROAD, RALEIGH, NORTH CAROLINA 27606, NC COA No. C-0890

–Y10–

PIPE HYDRAULIC DATA
24" RCP Sta. 13+26 –Y10–

DRAINAGE AREA	= 14.4	AC
DESIGN FREQUENCY	= 25	YRS
DESIGN DISCHARGE	= 15	CFS
DESIGN HW ELEVATION	= 2880.1	FT
100 YEAR DISCHARGE	= 24	CFS
100 YEAR HW ELEVATION	= 2881.2	FT
OVERTOPPING FREQUENCY	= 100 +	YRS
OVERTOPPING DISCHARGE	= 24 +	CFS
OVERTOPPING ELEVATION	= 2881.7	FT

BEGIN GRADE
–Y10– STA 12+75.00
EL. 2,882.21

END GRADE
–Y10 STA 17+62.15 =
–L– STA 200+67.09
EL. 2,885.96

PI = 16+25.00
EL = 2,891.42'
VC = 180'
K = 20

PI = 14+05.00
EL = 2,879.98'
VC = 260'
K = 38

EXISTING GROUND
PROPOSED GRADE
(+)5.2000%
(-)3.9810%
(-)3.9810%
(-)4.6750%
(+)5.2000%
(-)1.7154%
(+) 2.0000%
BEG. SPEC. DITCH
GRADE LT
STA= 12+75
EL= 2,879.83
PI =13+15 LT
El = 2,878.00
END SPEC. DITCH
GRADE LT
STA= 13+50
EL= 2,878.70

DITCH LEGEND
LEFT DITCH — - - — - -

SEE SHEET 7 FOR –Y10–

–Y11–

BEGIN GRADE
–Y11– STA 10+55.00
EL. 2,891.68

END GRADE
–Y11 STA 12+65.00 =
–L– STA 222+33.80
EL. 2,873.47

PI = 11+80.00
EL = 2,875.65'
VC = 170'
K = 17

PIPE HYDRAULIC DATA
18" RCP Sta. 12+28 –Y11–

DRAINAGE AREA	= 1.6	AC
DESIGN FREQUENCY	= 50	YRS
DESIGN DISCHARGE	= 4.6	CFS
DESIGN HW ELEVATION	= 2869.2	FT
100 YEAR DISCHARGE	= 5	CFS
100 YEAR HW ELEVATION	= 2869.2	FT
OVERTOPPING FREQUENCY	= 500 +	YRS
OVERTOPPING DISCHARGE	= 8 +	CFS
OVERTOPPING ELEVATION	= 2870.0	FT

PROPOSED GRADE
(-)12.8240%
(-)15.4969%
BEG. LAT. BASE DITCH LT. STA= 11+50 EL= 2,878.0
(-)12.2222%
(-)12.5647%
BEG. LAT. "V" DITCH RT. STA= 10+55 EL= 2,890.0
END LAT. "V" DITCH RT. STA= 12+18 RT EL= 2,868.0
END LAT. BASE DITCH LT. STA= 12+40 EL= 2,867.00
EXISTING GROUND

DITCH LEGEND
RIGHT DITCH - - - - - - - - -
LEFT DITCH — - - — - -

SEE SHEET 9 FOR –Y11–

–Y12–

PIPE HYDRAULIC DATA
24" RCP Sta. 14+38 –Y12–

DRAINAGE AREA	= 5.4	AC
DESIGN FREQUENCY	= 50	YRS
DESIGN DISCHARGE	= 16	CFS
DESIGN HW ELEVATION	= 2864.2	FT
100 YEAR DISCHARGE	= 17	CFS
100 YEAR HW ELEVATION	= 2864.3	FT
OVERTOPPING FREQUENCY	= 500 +	YRS
OVERTOPPING DISCHARGE	= 45 +	CFS
OVERTOPPING ELEVATION	= 2869.6	FT

BEGIN GRADE
–Y12– STA 12+85.00
EL. 2,870.62

END GRADE
–Y12– STA 14+87.00 =
–L– STA 229+83.60
EL. 2,870.70

PI = 13+35.00
EL = 2,870.30'
VC = 100'
K = 96

PI = 14+35.00
EL = 2,868.62'
VC = 100'
K = 18

(-)0.6400%
(-)1.6800%
(+)4.0000%
(-)6.6667%
BEG. LAT. "V" DITCH RT. STA= 13+95 EL= 2,866.0
END LAT. "V" DITCH RT. STA= 14+55 EL= 2,862.0
EXISTING GROUND
PROPOSED GRADE

DITCH LEGEND
RIGHT DITCH - - - - - - - - -

SEE SHEET 10 FOR –Y12–

5/28/99
6/26/2015 8:10:10 AM
R:\Roadway\Proj\2915B_RDY_PFL_18.DGN
USER: gillespie
MARK 1

PROJECT REFERENCE NO.	SHEET NO.
R-2915B	19

ROADWAY DESIGN ENGINEER

NORTH CAROLINA PROFESSIONAL SEAL 14160 ENGINEER DOUGLAS B. SAUNDERS

7/27/2015

DocuSigned by: Douglas B. Saunders, PE

CDM Smith
Camp Dresser & McKee
5400 Glenwood Avenue
Suite 300
Raleigh, NC 27612-3228
NC COA No. F-0412

HYDRAULICS ENGINEER

NORTH CAROLINA PROFESSIONAL SEAL 9334 ENGINEER W. HENRY WELLS JR.

7/27/2015

DocuSigned by: W. Henry Wells Jr.

SUNGATE DESIGN GROUP, P.A.
915 JONES FRANKLIN ROAD
RALEIGH, NORTH CAROLINA 27606
NC COA No. C-0890

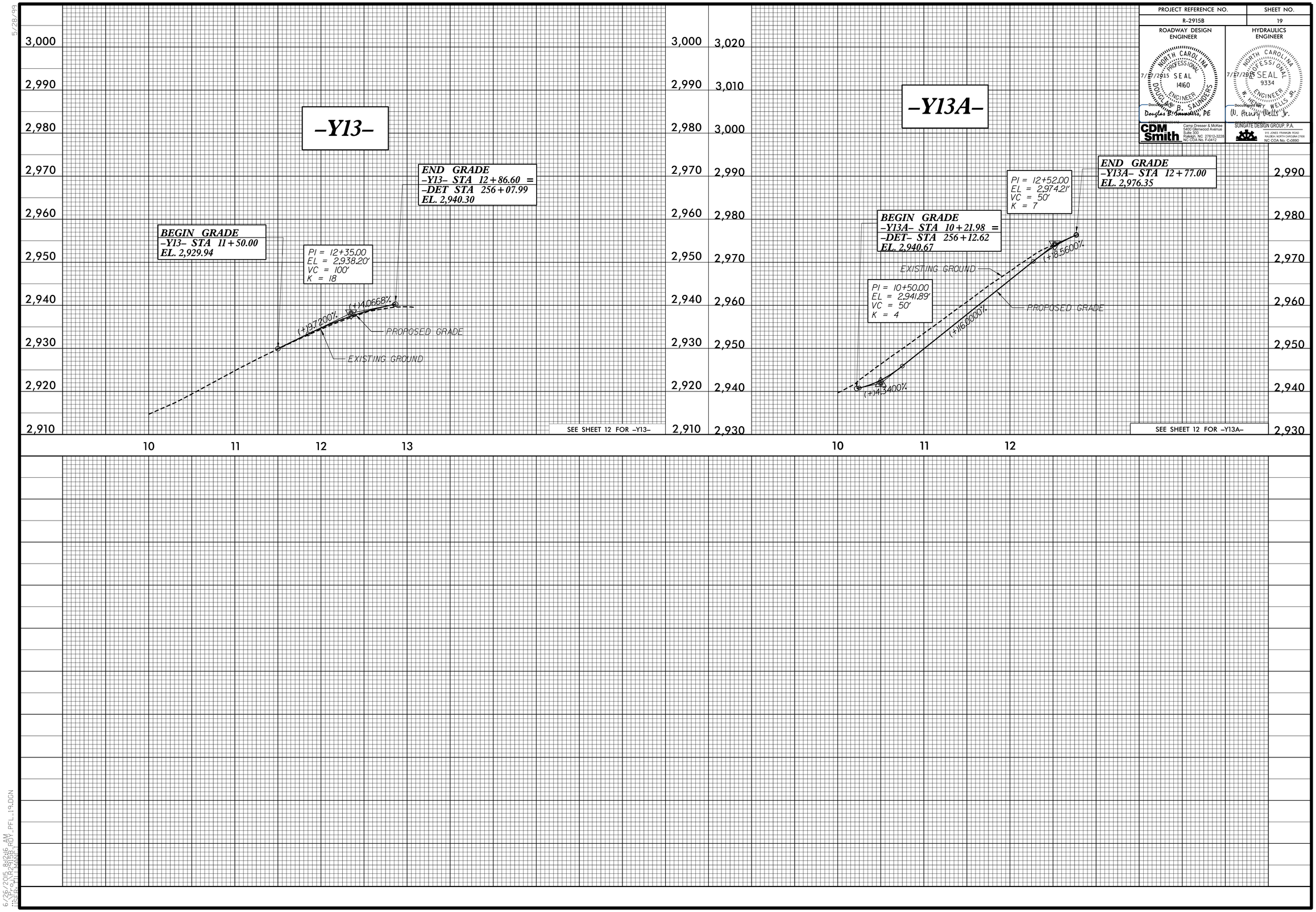

5/28/99

6/26/2015 8:16:16 AM
USER: SHILL
MARK 1
R-2915B_RDY_PFL_19.DGN

PROJECT REFERENCE NO.	SHEET NO.
R-2915B	20

ROADWAY DESIGN ENGINEER

NORTH CAROLINA PROFESSIONAL SEAL 14160 ENGINEER DOUGLAS B. SAUNDERS
7/31/2015
DocuSigned by: Douglas B. Saunders, PE

HYDRAULICS ENGINEER

NORTH CAROLINA PROFESSIONAL SEAL 9334 ENGINEER W. HENRY WELLS JR.
7/31/2015
DocuSigned by: W. Henry Wells Jr.

CDM Smith — Camp Dresser & McKee, 5400 Glenwood Avenue, Suite 300, Raleigh, NC 27612-3228, NC COA No. F-0412

SUNGATE DESIGN GROUP, P.A. — 915 JONES FRANKLIN ROAD, RALEIGH, NORTH CAROLINA 27606, NC COA No. C-0890

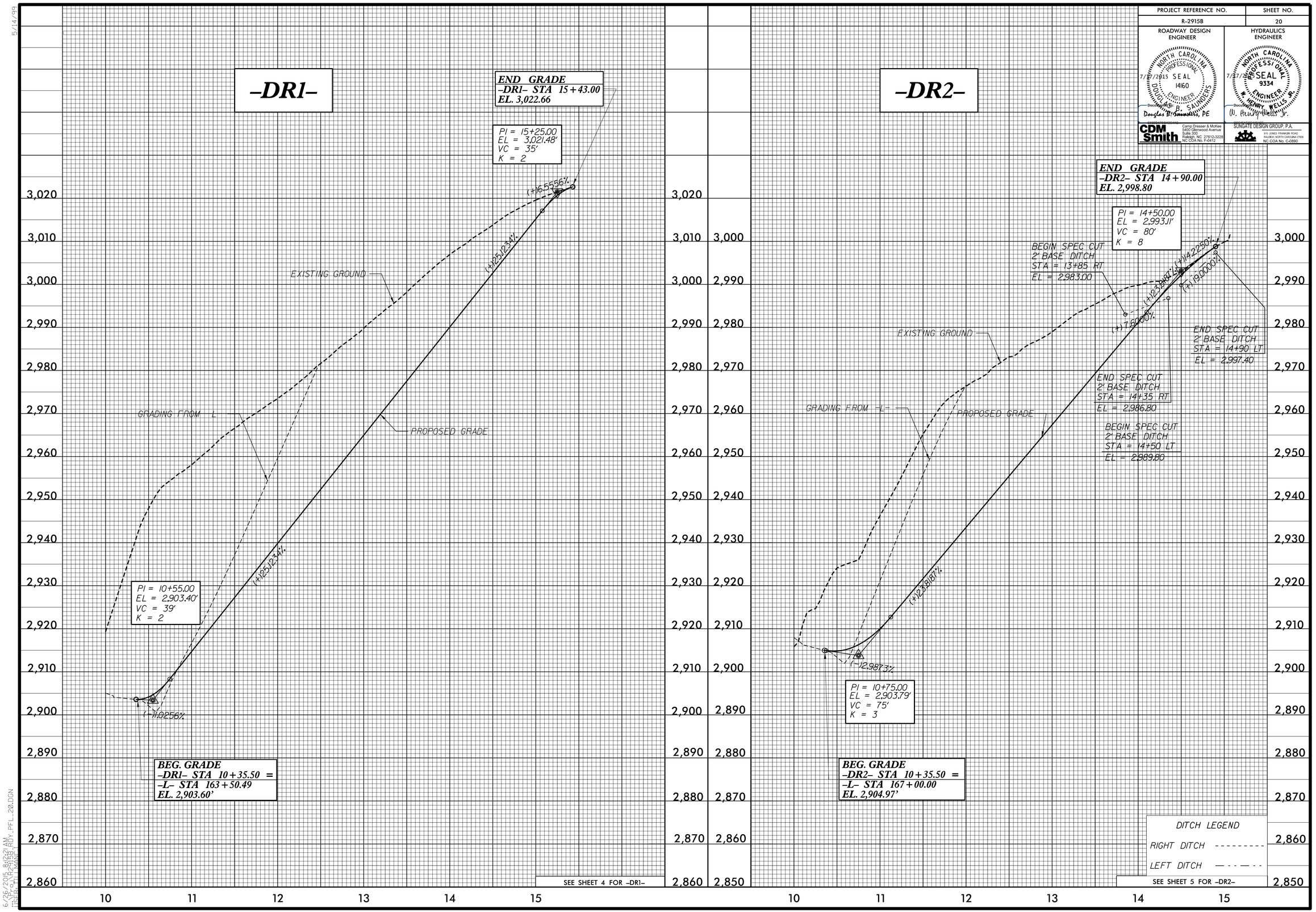

5/14/99

6/26/2015 8:32:21 AM
R:\Roadway\Proj\2915B_RDY_PFL_20.DGN
USER: TH | MANE-1

PROJECT REFERENCE NO.	SHEET NO.
R-2915B	21

ROADWAY DESIGN ENGINEER

NORTH CAROLINA PROFESSIONAL SEAL 14160 ENGINEER DOUGLAS B. SAUNDERS

7/27/2015

DocuSigned by: Douglas B. Saunders, PE

CDM Smith — Cameron-Brooks, P.A. 5400 Glenwood Avenue Suite 300 Raleigh, NC 27612-3228 NC COA No. F-0412

HYDRAULICS ENGINEER

NORTH CAROLINA PROFESSIONAL SEAL 9334 ENGINEER W. HENRY WELLS JR.

7/27/2015

DocuSigned by: W. Henry Wells Jr.

SUNGATE DESIGN GROUP, P.A. 915 JONES FRANKLIN ROAD RALEIGH, NORTH CAROLINA 27606 NC COA No. C-0890

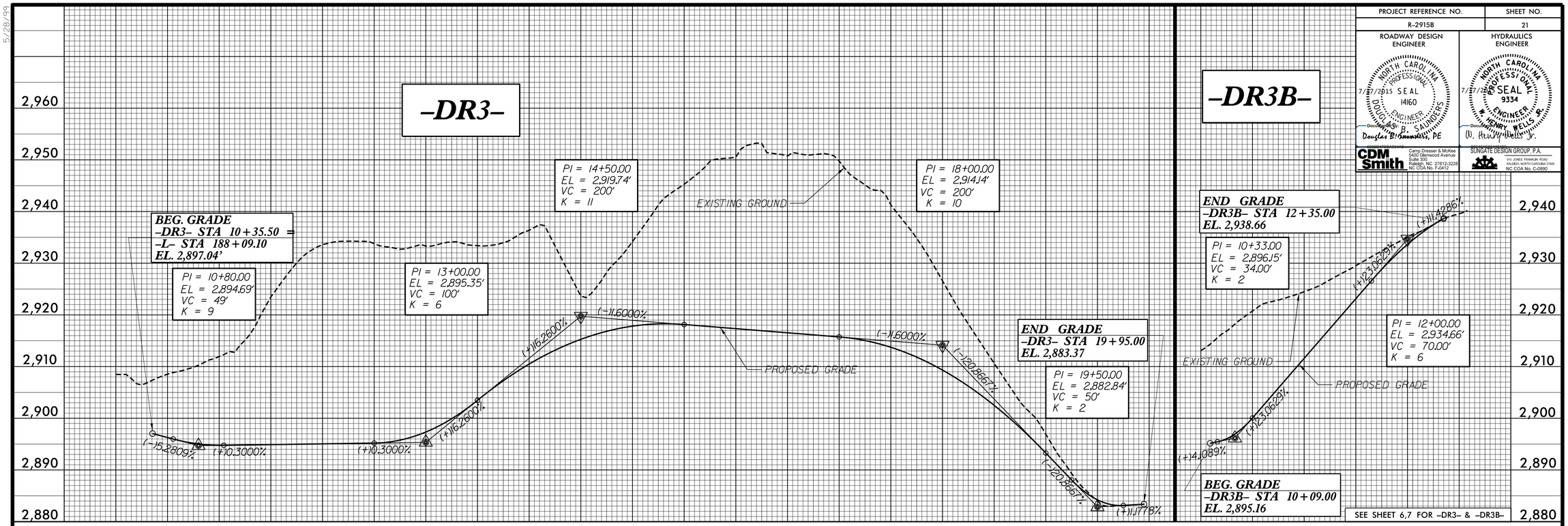

SEE SHEET 6,7 FOR -DR3- & -DR3B-

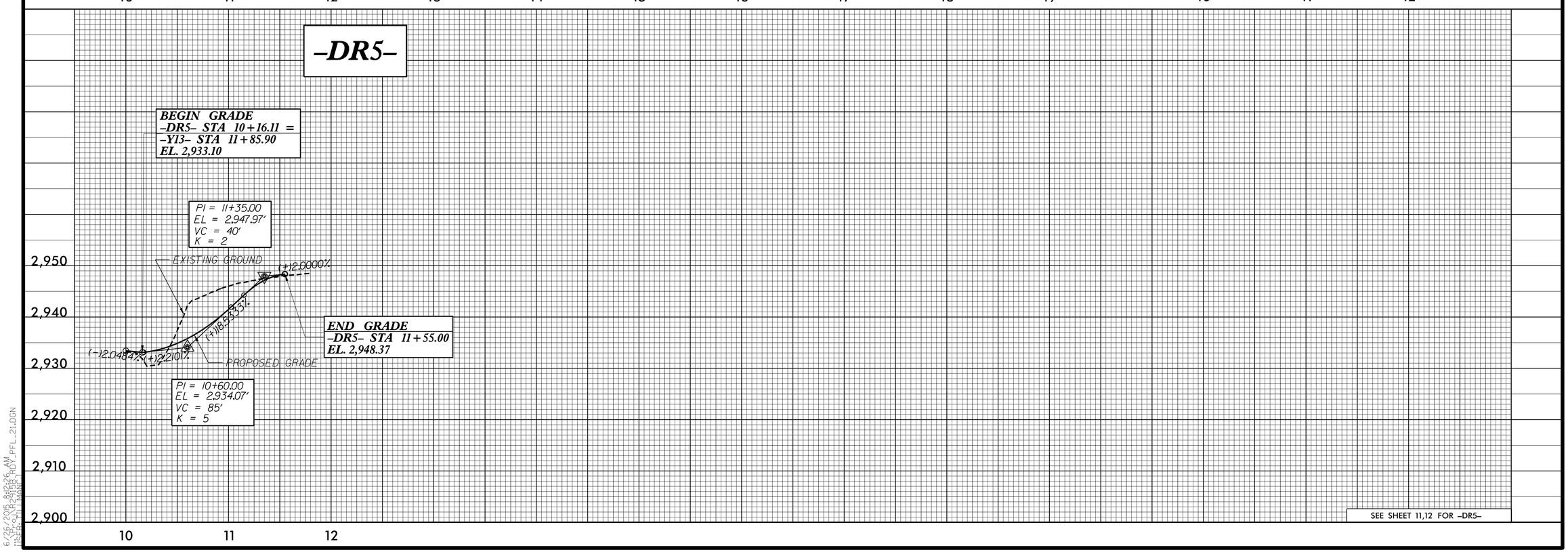

SEE SHEET 11,12 FOR -DR5-

5/28/99

6/26/2015 8:18:26 AM
R:\Roadway\Proj\2915B_RDY_PFL_21.DGN
USER: gtilley