STATE OF NORTH CAROLINA
DEPT. OF TRANSPORTATION
DIVISION OF HIGHWAYS
RALEIGH, N.C.

ENGLISH DETAIL DRAWING FOR

2′-9″ CONCRETE CURB & GUTTER

GENERAL NOTES:

- PLACE CONTRACTION JOINTS AT 10′ INTERVALS, EXCEPT THAT A 15′ SPACING MAY BE USED WHEN A MACHINE IS USED OR WHEN SATISFACTORY SUPPORT FOR THE FACE FORM CAN BE OBTAINED WITHOUT THE USE OF TEMPLATES AT 10′ INTERVALS.
- JOINT SPACING MAY BE ALTERED IF REQUIRED BY THE ENGINEER.
- CONTRACTION JOINTS MAY BE INSTALLED WITH THE USE OF TEMPLATES OR FORMED BY OTHER APPROVED METHODS. MAKE NON-TEMPLATE FORMED JOINTS A MIN. OF 1½″ DEEP.
- FILL ALL CONSTRUCTION JOINTS WITH JOINT FILLER AND SEALER.
- SPACE EXPANSION JOINTS AT 90′ INTERVALS AND ADJACENT TO ALL RIGID OBJECTS.
- SEE RDWY. STD. DWG. NO. 846.01, SHEET 2 OF 3 FOR PLACEMENT IN SUPERELEVATIONS. (USE 2′-6″ CURB AND GUTTER RATES)

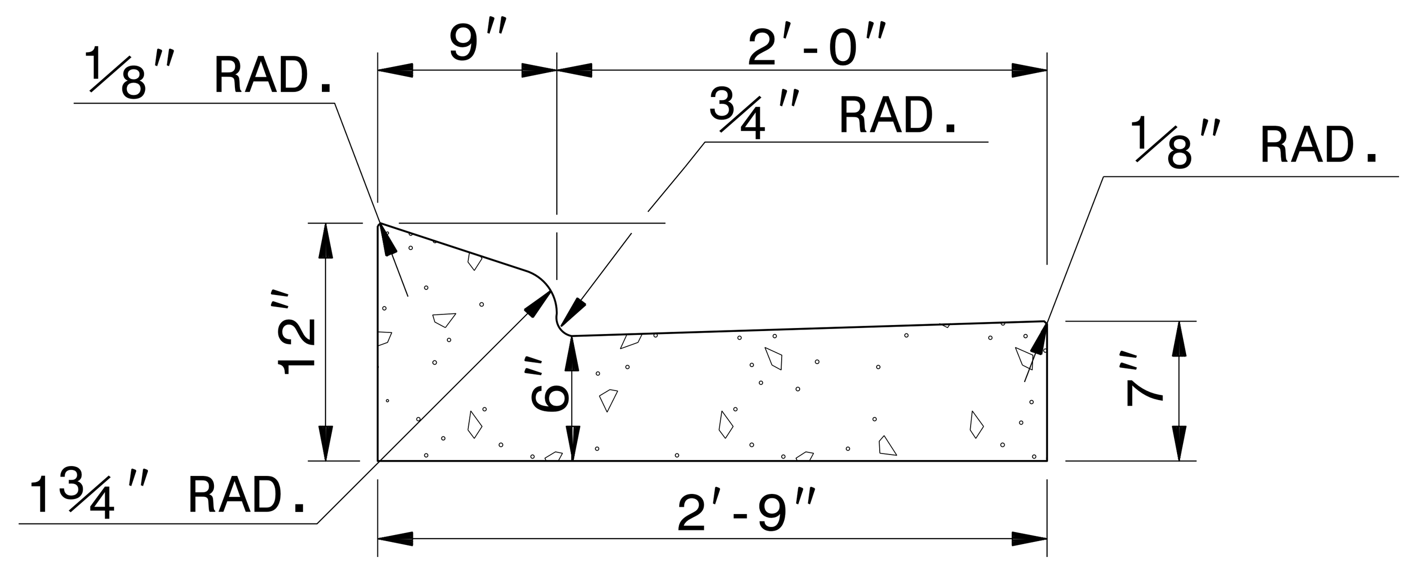

2′-9″ CURB AND GUTTER

SECTION VIEW OF CURB AND GUTTER

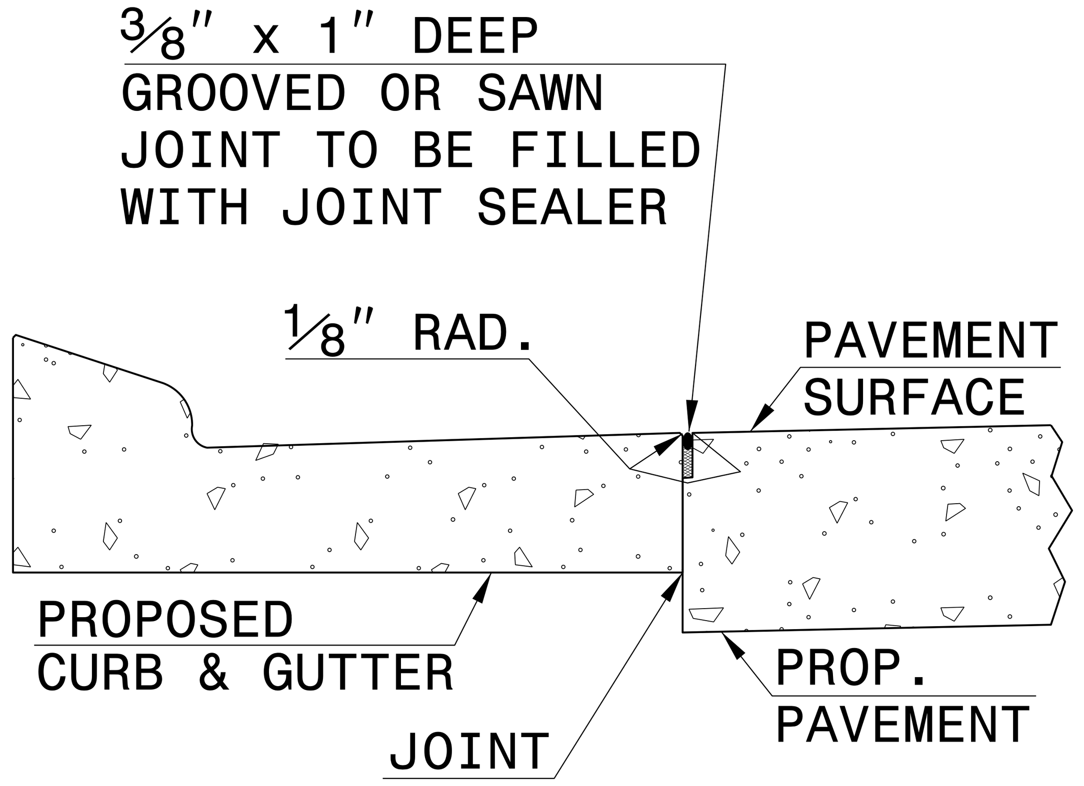

LONGITUDINAL JOINT

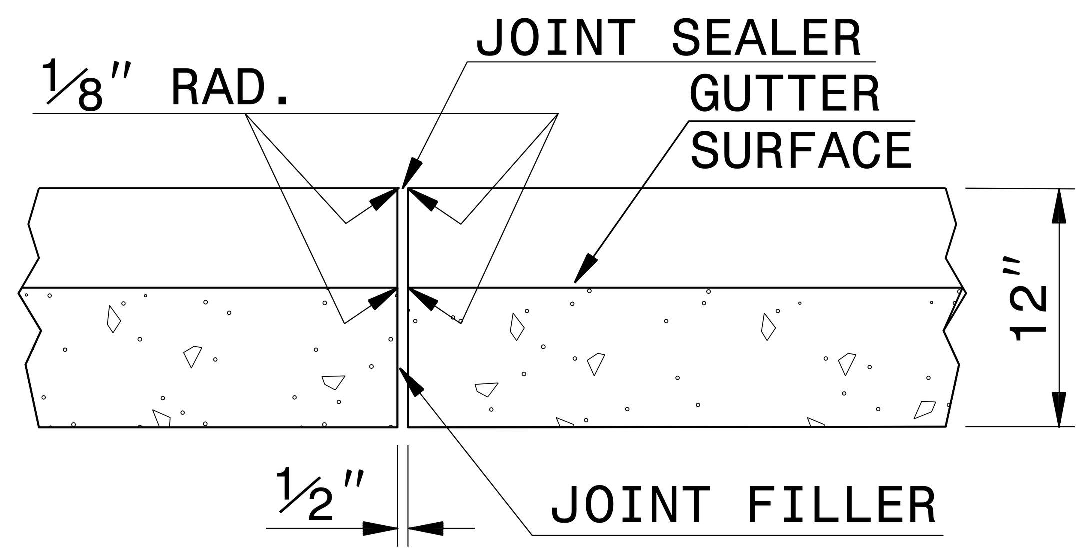

TRANSVERSE EXPANSION JOINT IN CURB AND GUTTER

SECTION VIEW OF JOINTS

SHEET 1 OF 1

846D01

7/14/2015

NORTH CAROLINA PROFESSIONAL SEAL 022966 ENGINEER Joel S. Howerton

DocuSigned by: Joel Howerton 873F3D17DCDC45F...

CONTRACT STANDARDS AND DEVELOPMENT UNIT
Office 919-707-6950 FAX 919-250-4119

SEE PLATE FOR TITLE

ORIGINAL BY: STD. 846.01 DATE:
MODIFIED BY: E.E. WARD DATE: 8-15-00
CHECKED BY: DATE:
FILE SPEC.: /usr/details/stand/c&g2′-9″.dgn

$$$$$$SYSTIME$$$$ $$$$$$$$$DGN$$$$$$$$$$$$$$$ $$$$USERNAME$$$$