DocuSign Envelope ID: 7D82475D-6E59-4D47-B79A-5E39EFD31682

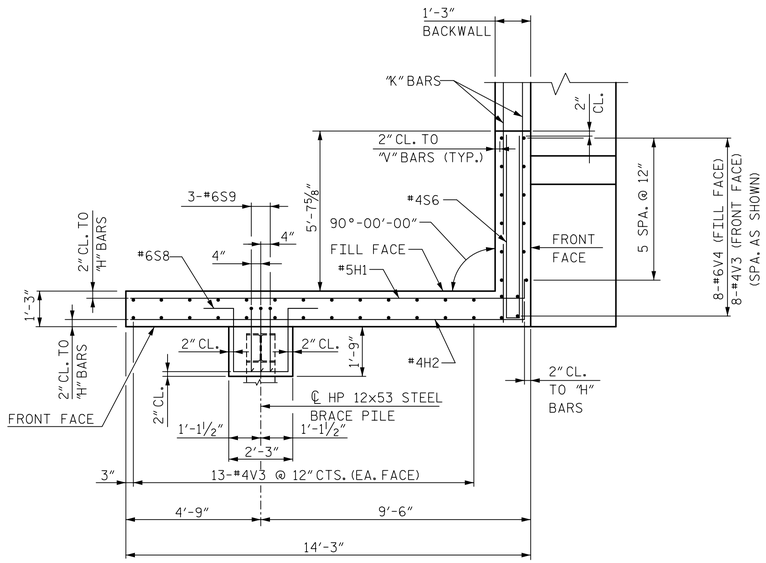

PLAN OF WING (W1)

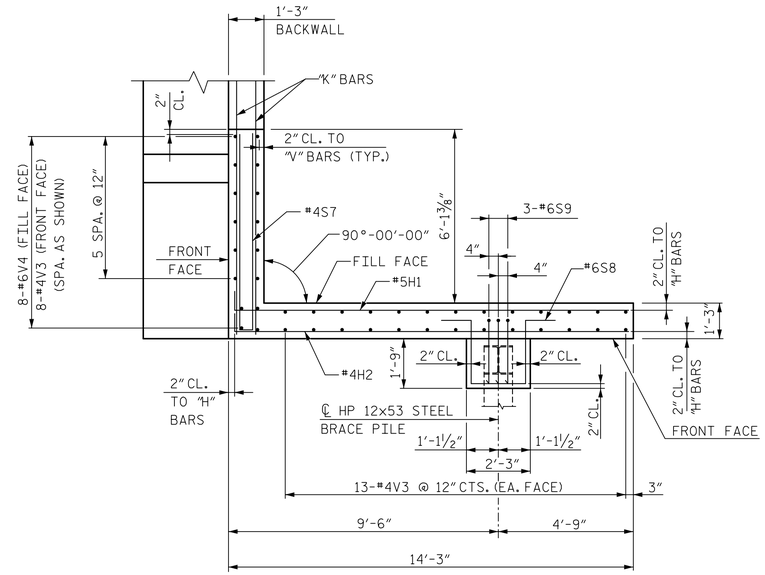

PLAN OF WING (W2)

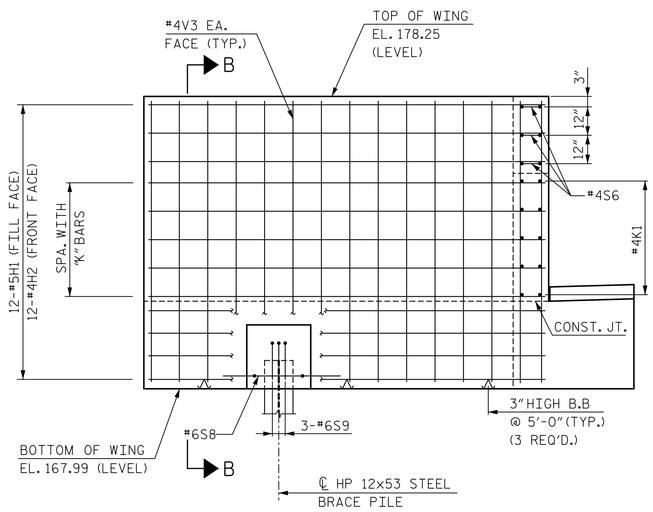

ELEVATION OF WING (W1)

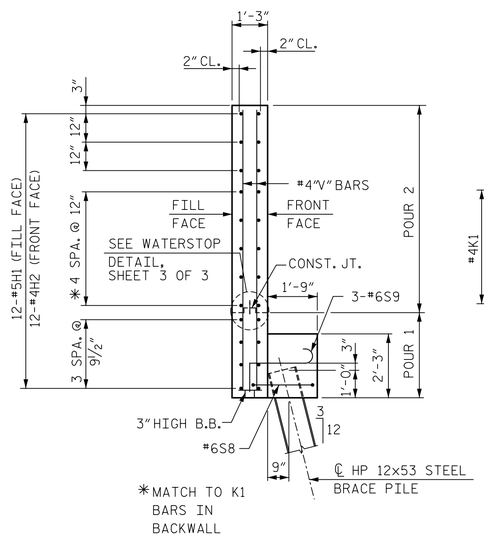

SECTION B-B

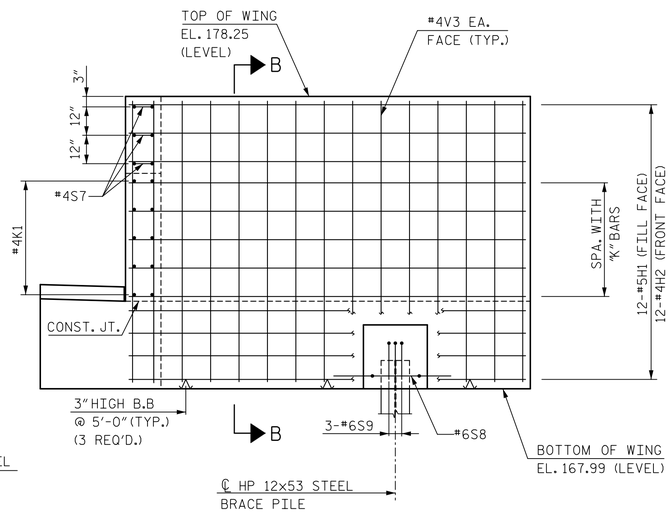

ELEVATION OF WING (W2)

PROJECT NO. P-4900A

ROBESON COUNTY

STATION: POS 22+07.07 -L-

MILE POST: 0.23

SHEET 2 OF 3

DocuSigned by: Paul J. Barber
NORTH CAROLINA PROFESSIONAL SEAL 12916 ENGINEER PAUL J. BARBER
2/27/2015

DocuSigned by: David W. Hawkins
NORTH CAROLINA PROFESSIONAL SEAL 27812 ENGINEER DAVID W. HAWKINS
2/27/2015

HNTB NORTH CAROLINA, P.C.
License No. C-1554
343 E. Six Forks Rd., Suite 200, Raleigh, N.C. 27609

DRAWN BY M. WRIGHT DATE 9/14
CHECKED BY D. RAGAN DATE 10/14

DWG. NO. 16

STATE OF NORTH CAROLINA
DEPARTMENT OF TRANSPORTATION
RALEIGH

SUBSTRUCTURE

ABUTMENT 2

REVISIONS						SHEET NO.
NO.	BY:	DATE:	NO.	BY:	DATE:	S-16
1			3			TOTAL SHEETS
2			4			54