DocuSign Envelope ID: 68040989-285F-4D6C-84F6-E6A0F121A7FD

PROJECT REFERENCE NO.	SHEET NO.
U-3315	2C-15

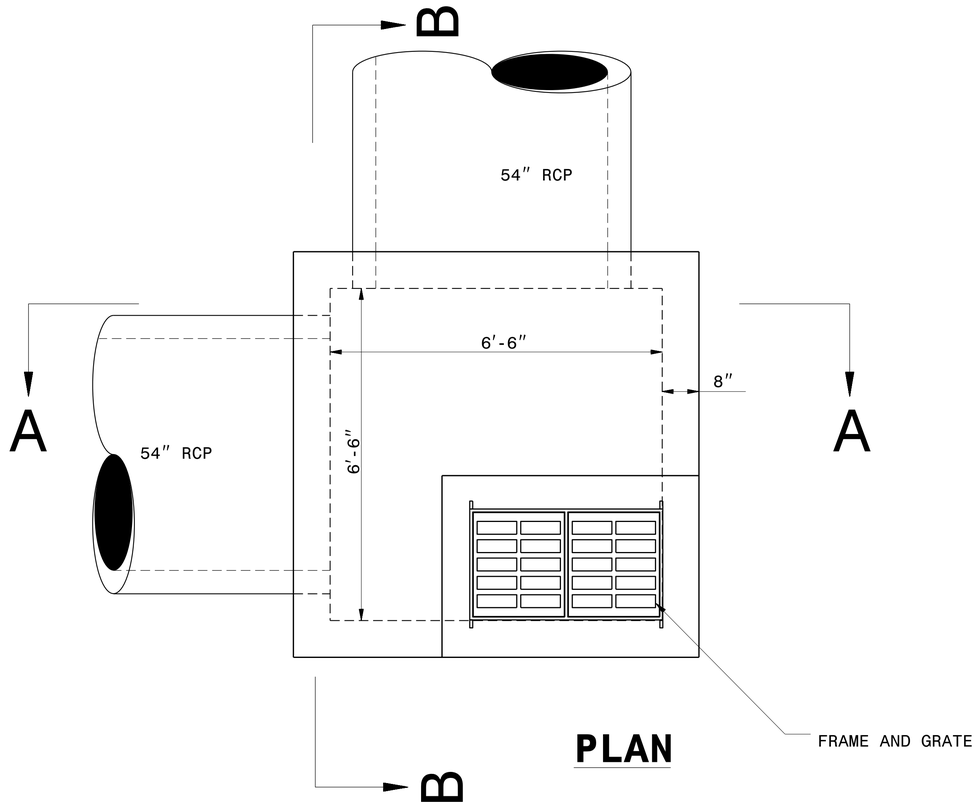

PLAN

NOTES:
1. PAY FOR QUANTITIES AT THE UNIT PRICE BID PER EACH.
2. USE CLASS "AA" CONCRETE THROUGHOUT.
3. CONSTRUCT CONCRETE BOX IN ACCORADANCE WITH SECTION 825 OF THE STANDARD SPECIFICATIONS.
4. CONSTRUCT BOTTOM SLAB WITH FORMS.
5. ADJUST LENGTH OF STEEL BARS AS NEEDED TO COMPENSATE FOR PIPES.
6. CONFORM REINFORCING STEEL TO ASTM A 615, GRADE 400.
7. CUT OR BEND STEEL BARS AS NEEDED TO PROVIDE 2" CLEARANCE AROUND PIPES OR AS DIRECTED BY THE ENGINEER.

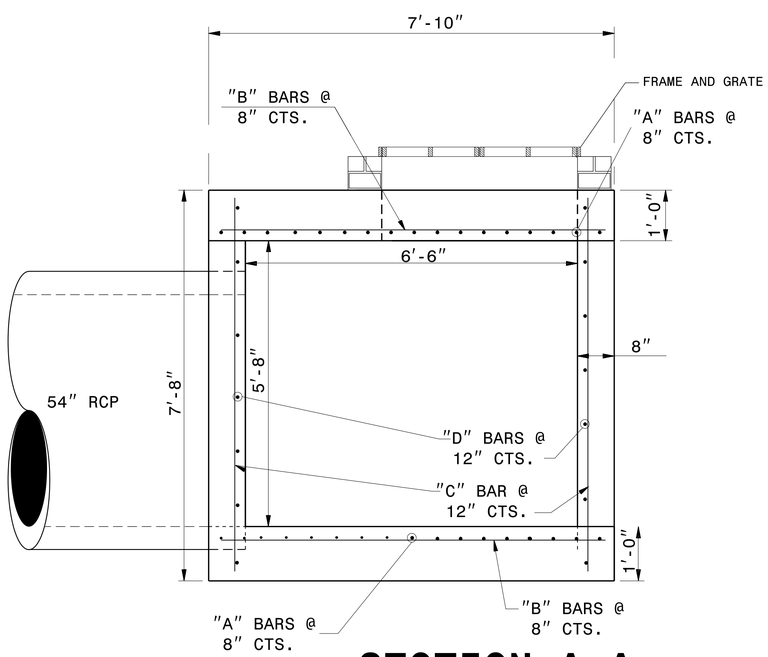

SECTION A-A

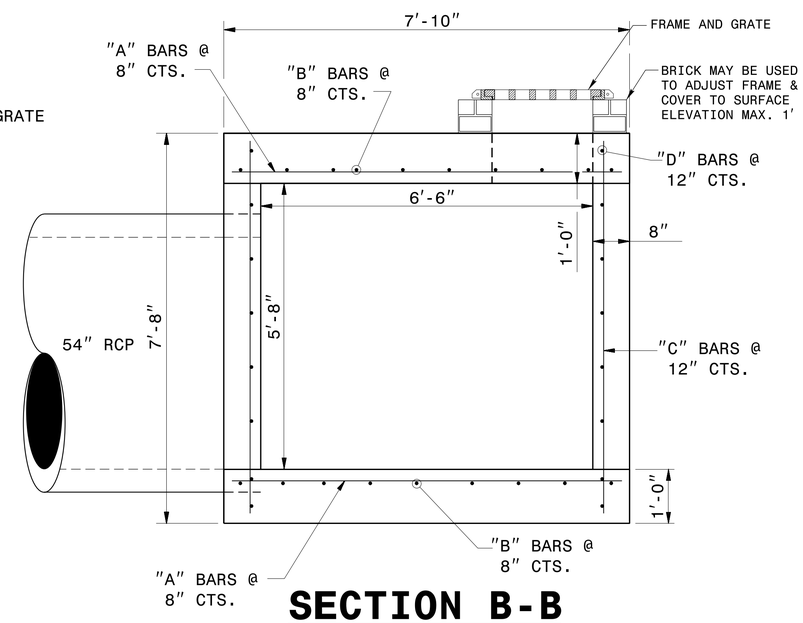

SECTION B-B

BRICK RISER

BILL OF MATERIALS

BAR	QTY	SIZE	LENGTH	WEIGHT
A	24	#5	7'-6"	188
B	24	#5	7'-6"	188
C	36	#5	7'-4"	276
D	36	#5	7'-6"	282
TOTAL REINF. STEEL (LBS.)				934
TOTAL CONC. - CU.YDS.				8.6

NO DEDUCTIONS HAVE BEEN MADE TO ACCOMMODATE PIPES.

NORTH CAROLINA PROFESSIONAL SEAL 022966 ENGINEER Joel S. Howerton
Joel Howerton
8393D017D02C45F...
6/4/2015

CONTRACT STANDARDS AND DEVELOPMENT UNIT
Office 919-707-6950 FAX 919-250-4119

TRAFFIC BEARING 2-GI

ORIGINAL BY: rnbritt DATE: 10-11-04
MODIFIED BY: T.Spell DATE: 5-9-05
CHECKED BY: DATE:
FILE SPEC.: detail/nbritt/english/rural/u3315 tbjb & tbdi.dgn

DOCUMENT NAME: U3315TBJB&TBDI.DGN
OPERATOR: SYSTEM