BAR TYPES

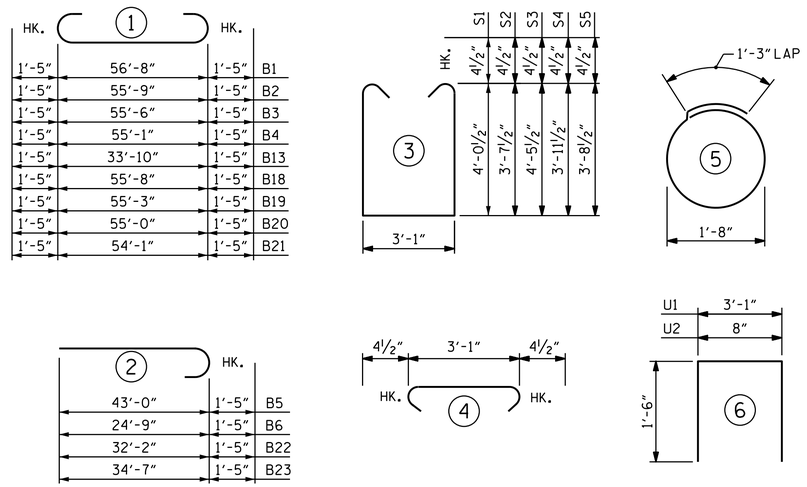

ALL BAR DIMENSIONS ARE OUT TO OUT.

BILL OF MATERIAL

END BENT 2

STAGE I

BAR	NO.	SIZE	TYPE	LENGTH	WEIGHT
B1	1	10	1	59'-6"	256
B2	1	10	1	58'-8"	252
B3	1	10	1	58'-4"	251
B4	1	10	1	57'-11"	249
B5	4	10	2	44'-5"	764
B6	4	10	2	26'-2"	450
B7	12	5	STR	30'-1"	377
B8	8	4	STR	29'-10"	159
B9	2	5	STR	16'-10"	35
B10	16	4	STR	3'-1"	33
B11	12	4	STR	2'-8"	21
D1	3	6	STR	2'-6"	11
K1	16	4	STR	29'-1"	311
K4	8	4	STR	8'-0"	43
S1	28	4	3	11'-11"	223
S2	34	4	3	11'-1"	252
S6	62	4	4	3'-10"	159
S7	28	4	5	6'-6"	122
U1	9	4	6	6'-1"	37
U2	56	4	6	3'-8"	137
V1	94	5	STR	7'-5"	727
V2	18	5	STR	9'-5"	177

REINFORCING STEEL LBS. 5,046

CLASS A CONCRETE BREAKDOWN

POUR #1 CAP	C.Y.	30.9
POUR #2 BACKWALL	C.Y.	8.5
TOTAL	C.Y.	39.4

HP 12X53 STEEL PILES NO. 8 LIN. FT. 560

STAGE II

BAR	NO.	SIZE	TYPE	LENGTH	WEIGHT
B10	9	4	STR	3'-1"	19
B13	8	10	1	36'-8"	1262
B14	8	5	STR	33'-8"	281
B15	8	4	STR	18'-3"	98
B16	4	4	STR	15'-2"	41
B17	4	4	STR	2'-8"	7
D1	3	6	STR	2'-6"	11
K2	16	4	STR	18'-3"	195
S3	40	4	3	12'-9"	341
S6	40	4	4	3'-10"	102
S7	20	4	5	6'-6"	87
U1	14	4	6	6'-1"	57
U2	34	4	6	3'-8"	83
V1	68	5	STR	7'-5"	526

REINFORCING STEEL LBS. 3,110

CLASS A CONCRETE BREAKDOWN

POUR #1 CAP	C.Y.	21.7
POUR #2 BACKWALL	C.Y.	4.9
TOTAL	C.Y.	26.3

HP 12X53 STEEL PILES NO. 5 LIN. FT. 365

STAGE III

BAR	NO.	SIZE	TYPE	LENGTH	WEIGHT
B10	16	4	STR	3'-1"	33
B18	1	10	1	58'-6"	252
B19	1	10	1	58'-1"	250
B20	1	10	1	57'-10"	249
B21	1	10	1	56'-11"	245
B22	4	10	2	33'-7"	578
B23	4	10	2	36'-0"	620
B24	12	5	STR	29'-6"	369
B25	8	4	STR	28'-9"	154
B26	2	5	STR	24'-3"	51
B27	4	4	STR	7'-2"	19
B28	4	4	STR	2'-8"	7
K3	16	4	STR	29'-2"	312
K4	8	4	STR	8'-0"	43
S4	51	4	3	11'-9"	400
S5	35	4	3	11'-3"	263
S6	86	4	4	3'-10"	220
S7	24	4	5	6'-6"	104
U1	9	4	6	6'-1"	37
U2	47	4	6	3'-8"	115
V1	94	5	STR	7'-5"	727
V5	18	5	STR	9'-7"	180

REINFORCING STEEL LBS. 5,228

CLASS A CONCRETE BREAKDOWN

POUR #1 CAP	C.Y.	30.8
POUR #2 BACKWALL	C.Y.	8.6
TOTAL	C.Y.	39.4

HP 12X53 STEEL PILES NO. 5 LIN. FT. 375

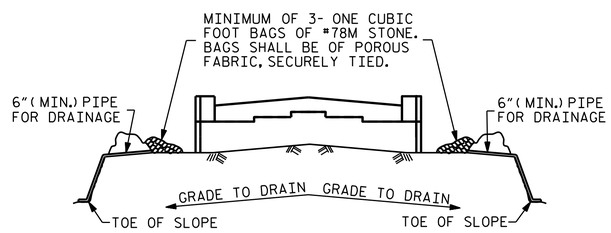

BAGGED STONE AND PIPE SHALL BE PLACED IMMEDIATELY AFTER COMPLETION OF END BENT EXCAVATION. PIPE MAY BE EITHER CONCRETE, CORRUGATED STEEL, CORRUGATED ALUMINUM ALLOY, OR CORRUGATED PLASTIC. PERFORATED PIPE WILL NOT BE ALLOWED.

BAGGED STONE SHALL REMAIN IN PLACE UNTIL THE ENGINEER DIRECTS THAT IT BE REMOVED. THE CONTRACTOR SHALL REMOVE AND DISPOSE OF SILT ACCUMULATIONS AT BAGGED STONE WHEN SO DIRECTED BY THE ENGINEER. BAGS SHALL BE REMOVED AND REPLACED WHENEVER THE ENGINEER DETERMINES THAT THEY HAVE DETERIORATED AND LOST THEIR EFFECTIVENESS.

NO SEPARATE PAYMENT WILL BE MADE FOR THIS WORK AND THE ENTIRE COST OF THIS WORK SHALL BE INCLUDED IN THE UNIT CONTRACT PRICE BID FOR THE SEVERAL PAY ITEMS.

TEMPORARY DRAINAGE AT END BENT

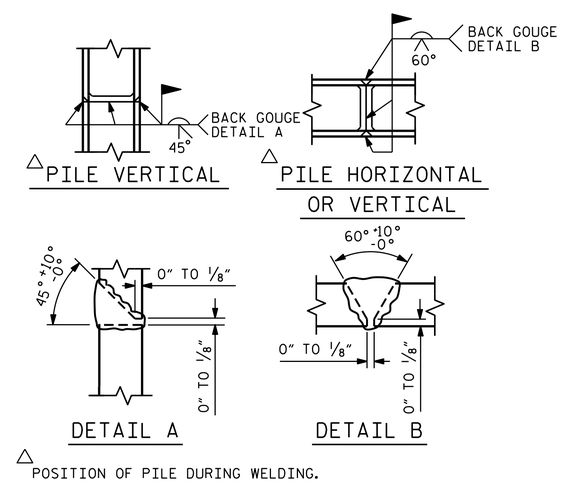

△ POSITION OF PILE DURING WELDING.

PILE SPLICE DETAILS

PROJECT NO. B-5136

CABARRUS COUNTY

STATION: 21+74.92 -L-

SHEET 5 OF 5

STATE OF NORTH CAROLINA
DEPARTMENT OF TRANSPORTATION
RALEIGH

SUBSTRUCTURE

END BENT 2

NORTH CAROLINA PROFESSIONAL SEAL 23371 ENGINEER VIPUL A. PATEL

DocuSigned by: vipul a patel 1C157DE15D46444... 2/19/2015

REVISIONS						SHEET NO.
NO.	BY:	DATE:	NO.	BY:	DATE:	S-72
1			3			TOTAL SHEETS
2			4			75

DRAWN BY : M.E. GILES DATE : 8/4/14
CHECKED BY : M.K. BEARD DATE : 10/16/14
DESIGN ENGINEER OF RECORD: H.A. LOCKLEAR DATE : 10/16/14

18-FEB-2015 14:04
R:\Structures\Plans\B5136_SD_E2_01.dgn
thcarroll