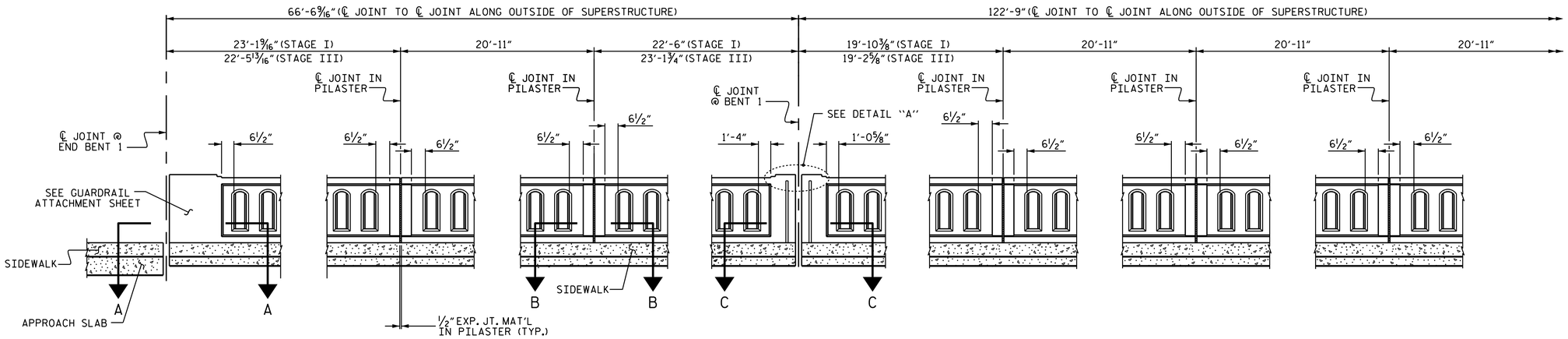

ROADWAY ELEVATION OF RAIL

(SPAN A-B)

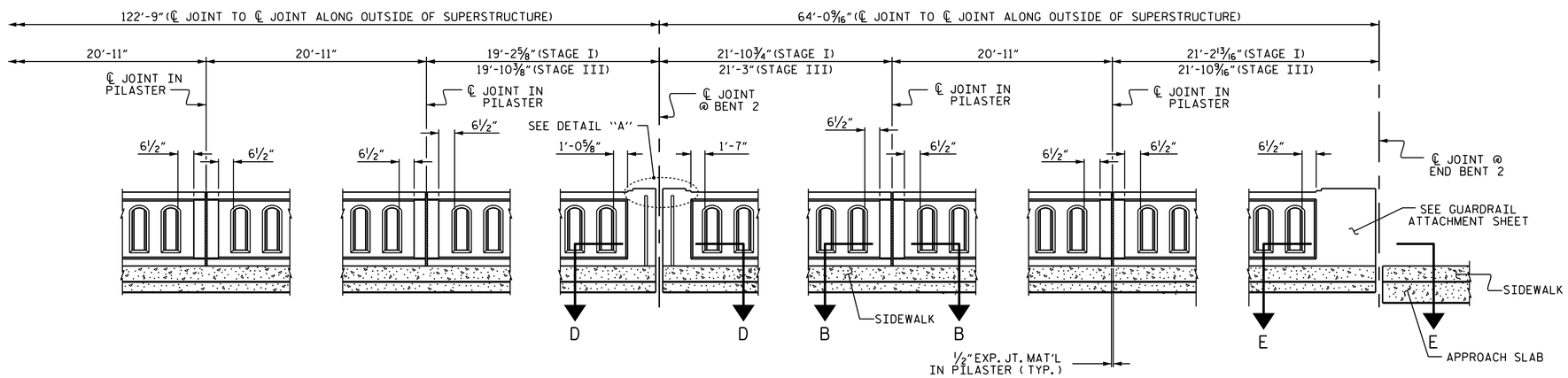

ROADWAY ELEVATION OF RAIL

(SPAN B-C)

FOR SECTIONS, SEE SHEET 2 OF 5.

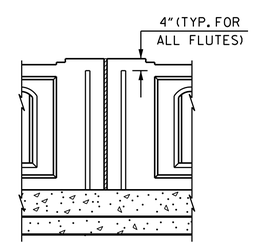

DETAIL "A"

PROJECT NO. B-5136

CABARRUS COUNTY

STATION: 21+74.92 -L-

SHEET 1 OF 5

STATE OF NORTH CAROLINA
DEPARTMENT OF TRANSPORTATION
RALEIGH

SUPERSTRUCTURE

CLASSIC CONCRETE BRIDGE RAIL WITH SIDEWALK

NORTH CAROLINA PROFESSIONAL SEAL 23371 ENGINEER VIPUL A. PATEL

DocuSigned by: vipul a patel 1C157DE15D4844A... 2/19/2015

REVISIONS							SHEET NO.
NO.	BY:	DATE:	NO.	BY:	DATE:		S-35
1			3				TOTAL SHEETS
2			4				75

DRAWN BY :	T. H. CARROLL	DATE :	7/31/14
CHECKED BY :	P. S. ADKINS	DATE :	8/12/14
DESIGN ENGINEER OF RECORD:	V. A. PATEL	DATE :	1/5/15

18-FEB-2015 14:03
R:\Structures\Plans\B5136_SD_BR_01.dgn
thcarroll