PROJECT REFERENCE NO.	SHEET NO.
B-5136	2A-2

ROADWAY DESIGN ENGINEER — 1/26/2015

PAVEMENT DESIGN ENGINEER — 1/23/2015

FINAL PAVEMENT DESIGN	
C1	3" S9.5C
D1	2½" I19.0C
D2	4" I19.0C
E1	5.5" B25.0C
E2	7" B25.0C
J	8" ABC
R1	2'-6" C & G
R2	1'-6" C & G
R3	CONC. ISLAND
S	4" SIDEWALK
T	EARTH MAT.
U	EXIST PAVE
W	WEDGING

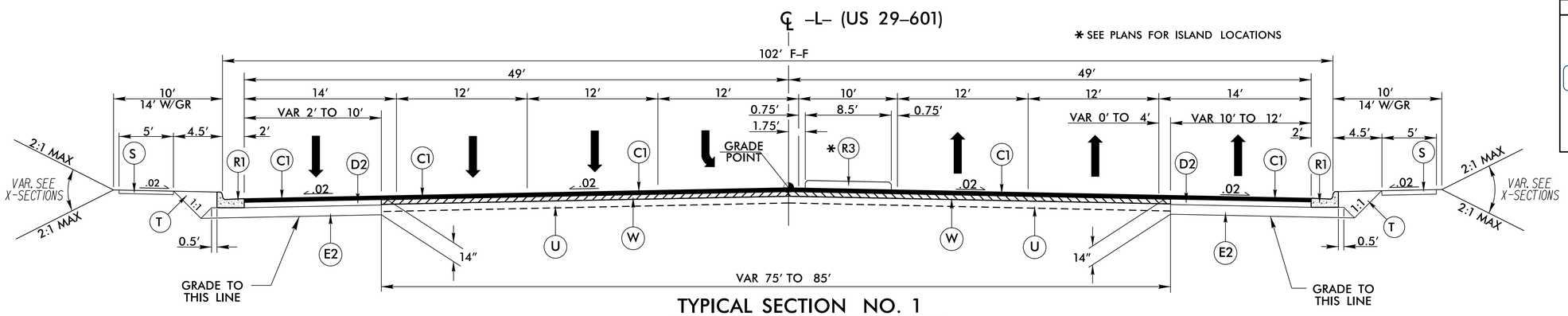

TYPICAL SECTION NO. 1

-L- STA. 11+75 TO 12+75, OVELRLAY EXISTING PAVEMENT
-L- STA. 12+75.00 TO 17+83.46

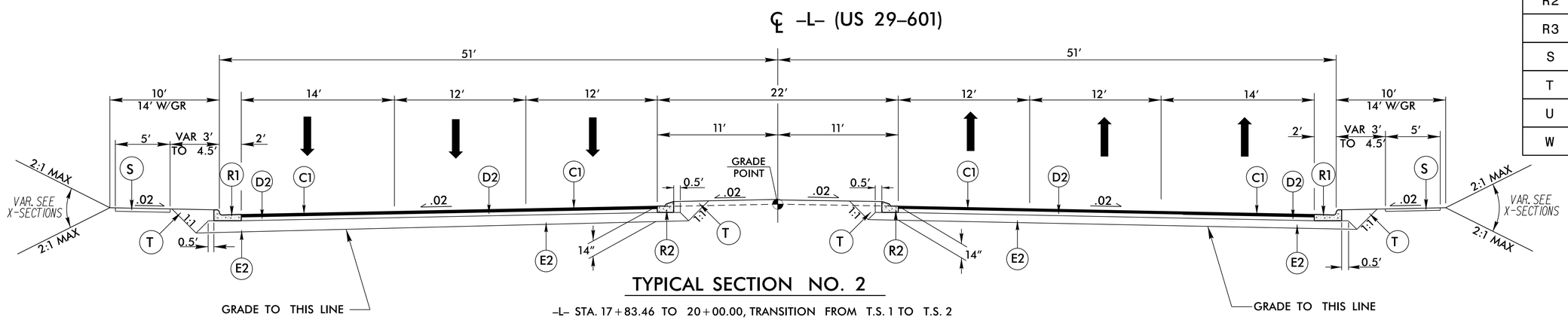

TYPICAL SECTION NO. 2

-L- STA. 17+83.46 TO 20+00.00, TRANSITION FROM T.S. 1 TO T.S. 2
-L- STA. 20+00.00 TO 20+46.56 (BEGIN BRIDGE)
-L- STA. 23+02.31 (END BRIDGE) TO 26+93.78
-L- STA. 26+93.78 TO 28+37.74, TRANSITION FROM T.S. 2 TO T.S. 3

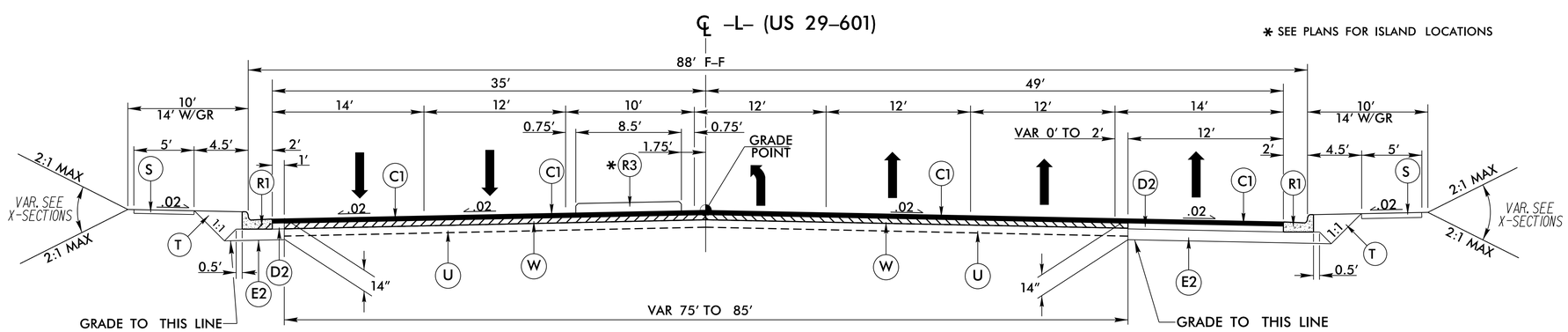

TYPICAL SECTION NO. 3

-L- STA. 28+37.74 TO 30+50.00
-L- STA. 30+50 TO 31+30, TRANSITION FROM T.S. 3 TO EXIST. PAVEMENT

NOTES:
1. ALL PAVEMENT EDGE SLOPES ARE 1:1 UNLESS OTHERWISE NOTED.
2. SHOULDER ROLLOVER NOT TO EXCEED 0.06 (TYP).
3. SEE PLANS FOR LOCATION OF TURN LANES

6/2/99
12-JAN-2015 09:56
R:\Roadway\Proj\B5136_Rdy_typ.dgn
$$$$USERNAME$$$$