DocuSign Envelope ID: 2FB5C919-371D-44E1-9D96-0E04DA997809

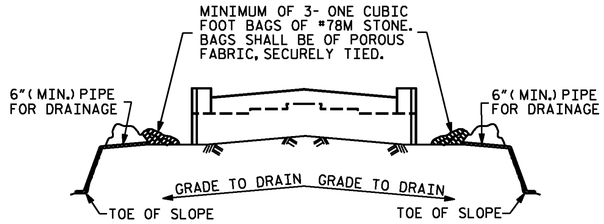

BAGGED STONE AND PIPE SHALL BE PLACED IMMEDIATELY AFTER COMPLETION OF END BENT EXCAVATION. PIPE MAY BE EITHER CONCRETE, CORRUGATED STEEL, CORRUGATED ALUMINUM ALLOY, OR CORRUGATED PLASTIC. PERFORATED PIPE WILL NOT BE ALLOWED.

BAGGED STONE SHALL REMAIN IN PLACE UNTIL THE ENGINEER DIRECTS THAT IT BE REMOVED. THE CONTRACTOR SHALL REMOVE AND DISPOSE OF SILT ACCUMULATIONS AT BAGGED STONE WHEN SO DIRECTED BY THE ENGINEER. BAGS SHALL BE REMOVED AND REPLACED WHENEVER THE ENGINEER DETERMINES THAT THEY HAVE DETERIORATED AND LOST THEIR EFFECTIVENESS.

NO SEPARATE PAYMENT WILL BE MADE FOR THIS WORK AND THE ENTIRE COST OF THIS WORK SHALL BE INCLUDED IN THE UNIT CONTRACT PRICE BID FOR THE SEVERAL PAY ITEMS.

TEMPORARY DRAINAGE AT END BENT

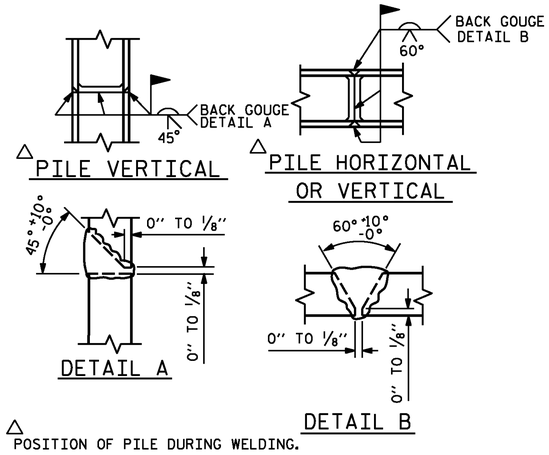

△ POSITION OF PILE DURING WELDING.

PILE SPLICE DETAILS

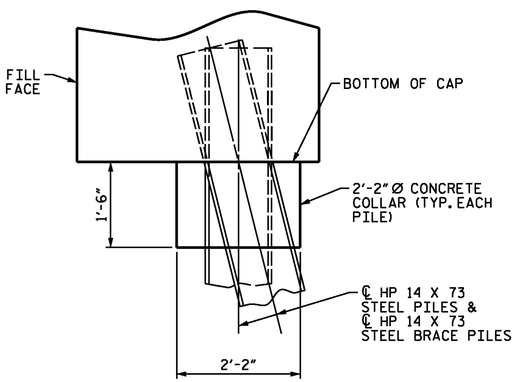

ELEVATION

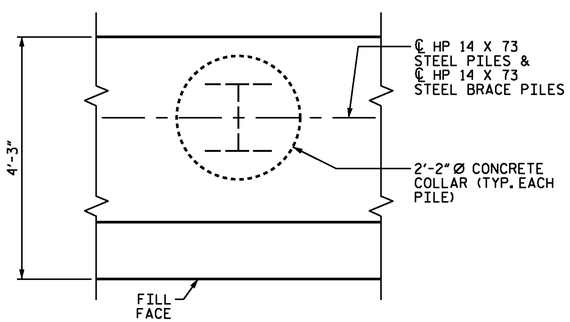

PLAN

CORROSION PROTECTION FOR STEEL PILES DETAIL

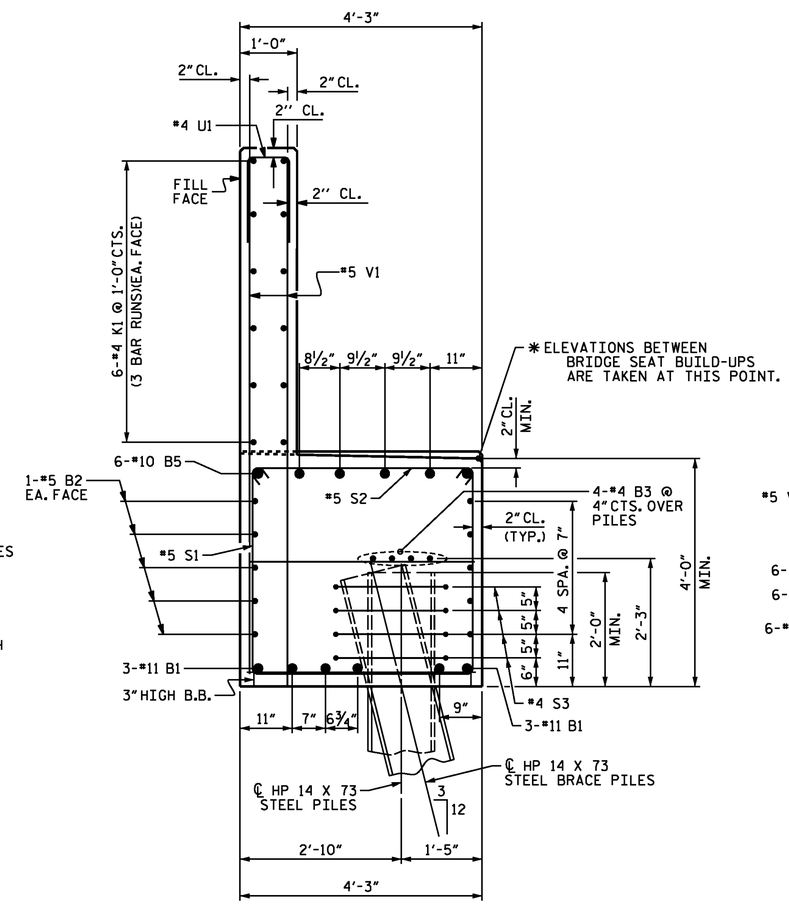

SECTION A-A

(CONCRETE COLLAR NOT SHOWN FOR CLARITY)
(SEE "CORROSION PROTECTION FOR STEEL PILES DETAIL")

BAR TYPES

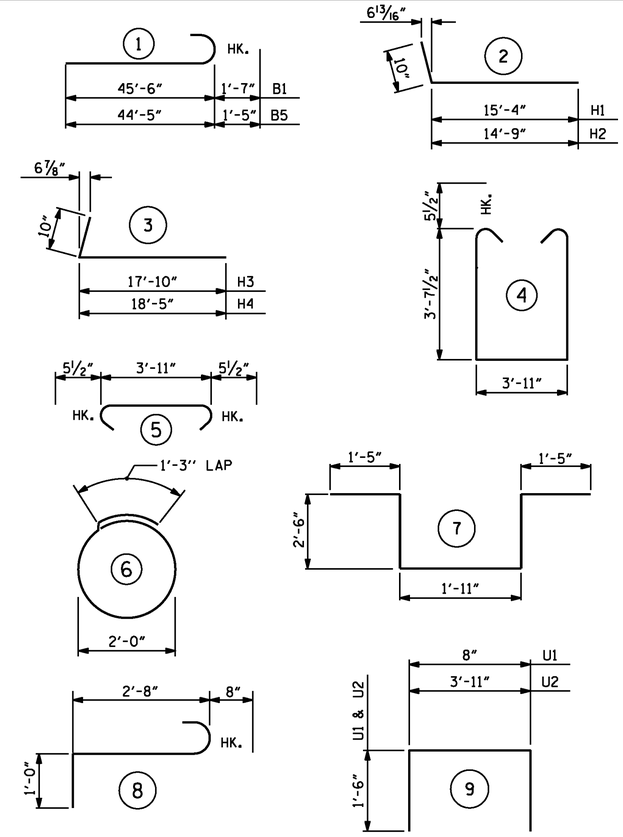

ALL BAR DIMENSIONS ARE OUT TO OUT.

BILL OF MATERIAL

END BENT 2

BAR	NO.	SIZE	TYPE	LENGTH	WEIGHT
B1	12	#11	1	47'-1"	3,002
B2	20	#5	STR	40'-4"	841
B3	12	#4	STR	27'-4"	219
B4	30	#4	STR	3'-11"	78
B5	12	#10	1	45'-10"	2,367
B6	12	#4	STR	21'-6"	172
B7	18	#4	STR	25'-1"	302
H1	13	#4	2	16'-2"	140
H2	13	#4	2	15'-7"	135
H3	18	#4	3	18'-8"	224
H4	18	#4	3	19'-3"	231
K1	36	#4	STR	27'-4"	657
K2	8	#4	STR	4'-5"	24
S1	148	#5	4	12'-1"	1,865
S2	128	#5	5	4'-10"	645
S3	40	#4	6	7'-7"	203
S4	12	#6	7	9'-9"	176
S5	6	#6	8	4'-4"	39
U1	67	#4	9	3'-8"	164
U2	58	#4	9	6'-11"	268
V1	134	#5	STR	9'-4"	1,304
V2	41	#5	STR	11'-2"	478
V3	47	#5	STR	12'-2"	596

REINFORCING STEEL LBS. 14,130

CLASS A CONCRETE BREAKDOWN

POUR #1 (CAP, LOWER WINGS, & CONCRETE COLLARS) C.Y. 67.0

POUR #2 (BACKWALL & UPPER WINGS) C.Y. 27.0

TOTAL CLASS A CONCRETE C.Y. 94.0

HP 14 X 73 STEEL PILES

PILES 1-5 LIN. FT. 100.00
WING WALL 2 LIN. FT. 20.00

PILES 6-10 LIN. FT. 50.00
WING WALL 1 LIN. FT. 10.00

TOTAL NO. 12 LIN. FT. 180.0

STEEL PILE POINTS EA. 12

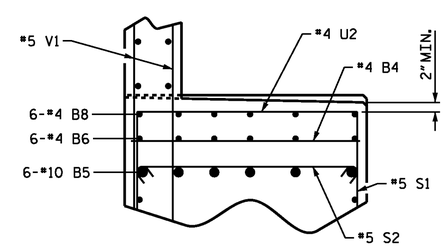

SECTION B-B

PROJECT NO. B-5114
RANDOLPH COUNTY
STATION: 19+99.61-L-

SHEET 3 OF 3

DocuSigned by: Nicholas Pierce 03F097FA047D436...

NORTH CAROLINA PROFESSIONAL SEAL 037479 ENGINEER NICHOLAS A. PIERCE

3/5/2015

STATE OF NORTH CAROLINA
DEPARTMENT OF TRANSPORTATION
RALEIGH

SUBSTRUCTURE
END BENT 2

WSP
Transportation & Infrastructure
15401 Weston Parkway Suite 100
Cary, NC 27513 - 919.678.0035
www.wspgroup.com
LICENSE NO. F-0891

DESIGN ENGINEER OF RECORD	DATE
N.A. PIERCE	11/14
DRAWN BY : N.A. PIERCE	DATE : 11/14
CHECKED BY : M.J. OSTRISHKO	DATE : 11/14

REVISIONS								SHEET NO.
NO.	BY:	DATE:	NO.	BY:	DATE:			S01-33
1			3					TOTAL SHEETS
2			4					36