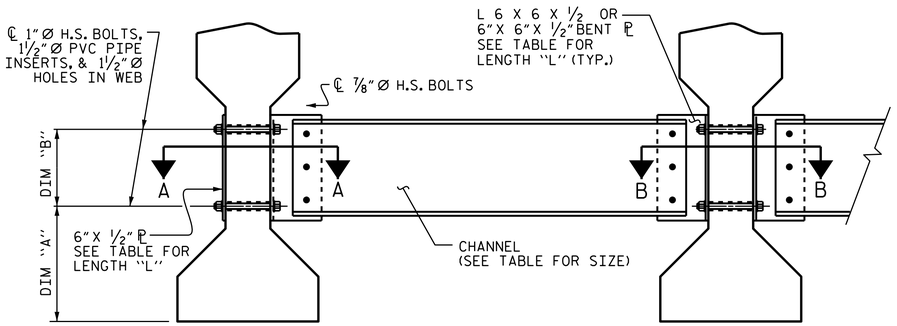

EXTERIOR GIRDER

INTERIOR GIRDER

PART SECTION AT INTERMEDIATE DIAPHRAGM

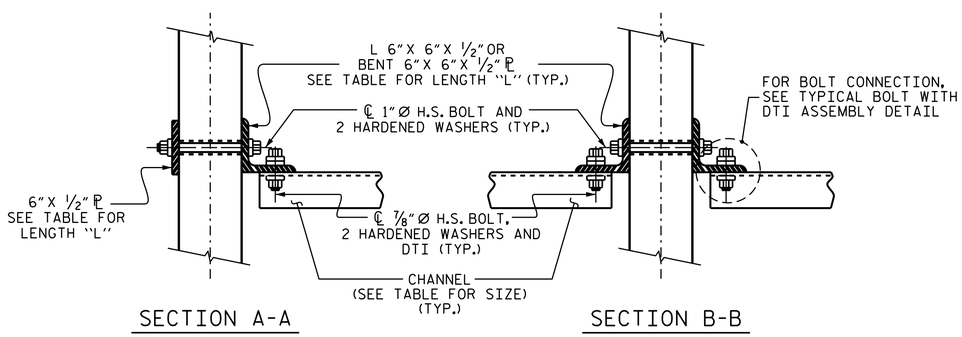

SECTION A-A

SECTION B-B

CONNECTION DETAILS

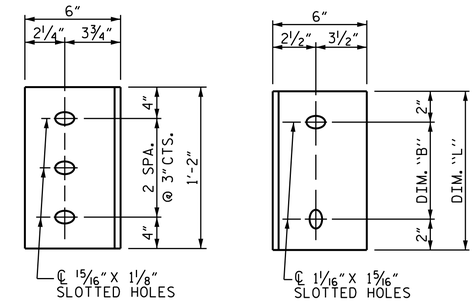

DIAPHRAGM FACE

WEB FACE

CONNECTOR PLATE DETAILS

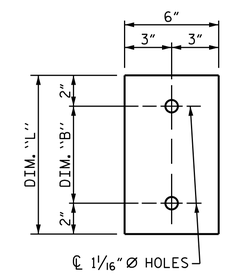

PLATE DETAILS

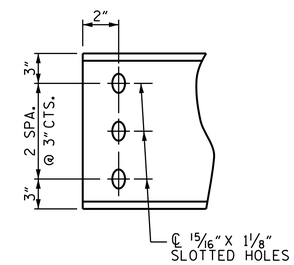

CHANNEL END

STRUCTURAL STEEL NOTES

ALL INTERMEDIATE DIAPHRAGM STEEL AND CONNECTOR PLATES SHALL BE AASHTO M270 GRADE 50 OR APPROVED EQUAL.

TENSION ON THE ASTM A325 BOLTS THROUGH THE CHANNEL MEMBER SHALL BE CALIBRATED USING DIRECT TENSION INDICATOR WASHERS IN ACCORDANCE WITH THE STANDARD SPECIFICATIONS.

TENSION ON THE ASTM A449 BOLTS THROUGH THE GIRDER WEB SHALL BE SNUG TIGHTENED FOLLOWED BY AN ADDITIONAL ¼ TURN.

THE PLATES, BENT PLATES, CHANNELS, AND ANGLES SHALL BE GALVANIZED OR METALLIZED IN ACCORDANCE WITH THE STANDARD SPECIFICATIONS. FOR THERMAL SPRAYED COATINGS (METALLIZATION), SEE SPECIAL PROVISIONS.

FOR METALLIZATION, APPLY AN 8 MIL THICK 99.99 PERCENT ZINC (W-Zn-1) THERMAL SPRAYED COATING WITH A 0.5 MIL THICK SEAL COAT TO ALL STEEL DIAPHRAGM SURFACES IN ACCORDANCE WITH THE THERMAL SPRAYED COATINGS SPECIAL PROVISION AND SECTION 442 OF THE STANDARD SPECIFICATIONS.

GALVANIZE THE HIGH STRENGTH BOLTS, NUTS, WASHERS AND DIRECT TENSION INDICATORS IN ACCORDANCE WITH THE STANDARD SPECIFICATIONS.

USE AN ASTM F436 HARDENED WASHER WITH STANDARD AND SLOTTED HOLES UNDER EACH BOLT HEAD AND NUT.

FOR BOLTS THROUGH THE GIRDER WEB, PROVIDE SUFFICIENT LENGTH OF THREADS ON ALL BOLTS TO ACCOMMODATE WASHERS AND THE THICKNESS OF CONNECTING MEMBER PLUS AT LEAST ¼"PROJECTION BEYOND THE NUT.

INTERMEDIATE DIAPHRAGM ASSEMBLY SHALL COMPLY WITH SECTION 1072 OF THE STANDARD SPECIFICATIONS.

SUBMIT TWO SETS OF WORKING DRAWINGS FOR THE INTERMEDIATE DIAPHRAGM ASSEMBLY FOR REVIEW, COMMENTS AND ACCEPTANCE. AFTER REVIEW, COMMENTS, AND ACCEPTANCE, SUBMIT SEVEN SETS FOR DISTRIBUTION.

IN THE EXTERIOR BAYS, PLACE TEMPORARY STRUTS BETWEEN PRESTRESSED GIRDERS ADJACENT TO THE STEEL DIAPHRAGMS. STRUTS SHALL REMAIN IN PLACE 3 DAYS AFTER CONCRETE IS PLACED.

THE COST OF THE STEEL DIAPHRAGMS AND ASSEMBLIES SHALL BE INCLUDED IN THE UNIT PRICE BID FOR PRESTRESSED CONCRETE GIRDERS.

TABLE

GIRDER TYPE	CHANNEL SIZE	DIM "A"	DIM "B"	DIM "L"
II	MC 12 x 31	1'-2½"	10"	1'-2"

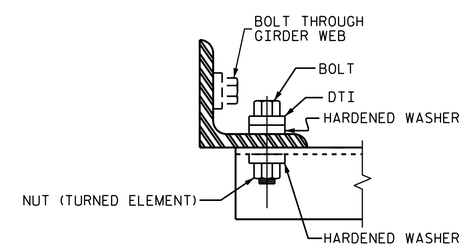

BOLT WITH DTI ASSEMBLY DETAIL

PROJECT NO. R-2514C

JONES COUNTY

STATION: 102+05.00 -L-

SHEET 3 OF 3

STATE OF NORTH CAROLINA
DEPARTMENT OF TRANSPORTATION
RALEIGH

INTERMEDIATE STEEL DIAPHRAGMS FOR TYPE II PRESTRESSED CONCRETE GIRDERS

(RIGHT LANE)

NORTH CAROLINA PROFESSIONAL SEAL 22005 ENGINEER A. KEITH PASCHAL

DocuSigned by: A. Keith Paschal F8B6AD60B2FC48F... 3/23/2015

REVISIONS							SHEET NO.
NO.	BY:	DATE:	NO.	BY:	DATE:		S-42
1			3				TOTAL SHEETS
2			4				56

ASSEMBLED BY : D. G. ELY DATE : 05-02-14
CHECKED BY : B. N. BARODAWALA DATE : 06-13-14
DESIGN ENGINEER OF RECORD: A. K. PASCHAL DATE : 02-09-15

DRAWN BY : TLA 6/05
CHECKED BY : VC 6/05

ADDED 10/21/05
REV. 5/1/06RRR KMM/GM
REV. 10/1/11 MAA/GM

23-MAR-2015 12:05
R:\Structures\Plans\Final Plans\DocuSign Setup\402_000_R-2514C_SMU_S_0.dgn
kpaschal

STR. #2

STD. NO. PCG10 (SHT 3)