REINFORCING STEEL FOR GIRDER 1

BAR	NUMBER	SIZE	TYPE	LENGTH	WEIGHT
S1	147	#4	1	10'-8"	1,047
S2	14	#6	1	10'-8"	224
S3	4	#4	2	9'-1"	24
S4	76	#4	3	3'-5"	173
S5	6	#4	2	8'-5"	34
S6	1	#4	2	9'-11"	7
✱ S7	6	#5	STR	3'-8"	23
S8	4	#4	2	8'-7"	23
S9	1	#3	STR	1'-10"	1
S10	2	#5	2	8'-8"	18
S11	5	#4	STR	7'-0"	23
REINFORCING STEEL LBS.					1,597

REINFORCING STEEL FOR GIRDER 2

BAR	NUMBER	SIZE	TYPE	LENGTH	WEIGHT
S1	147	#4	1	10'-8"	1,047
S2	14	#6	1	10'-8"	224
S3	4	#4	2	9'-1"	24
S4	76	#4	3	3'-5"	173
S5	6	#4	2	8'-5"	34
S6	1	#4	2	9'-11"	7
✱ S7	6	#5	STR	3'-8"	23
S8	4	#4	2	8'-7"	23
S9	1	#3	STR	1'-10"	1
S10	4	#5	2	8'-8"	36
S12	5	#4	STR	12'-8"	42
REINFORCING STEEL LBS.					1,634

REINFORCING STEEL FOR GIRDER 3 & 4

BAR	NUMBER	SIZE	TYPE	LENGTH	WEIGHT
S1	147	#4	1	10'-8"	1,047
S2	14	#6	1	10'-8"	224
S3	4	#4	2	9'-1"	24
S4	76	#4	3	3'-5"	173
S5	6	#4	2	8'-5"	34
S6	1	#4	2	9'-11"	7
✱ S7	6	#5	STR	3'-8"	23
S8	4	#4	2	8'-7"	23
S9	1	#3	STR	1'-10"	1
S10	4	#5	2	8'-8"	36
S12	5	#4	STR	12'-8"	42
REINFORCING STEEL LBS.					1,634

REINFORCING STEEL FOR GIRDER 5

BAR	NUMBER	SIZE	TYPE	LENGTH	WEIGHT
S1	147	#4	1	10'-8"	1,047
S2	14	#6	1	10'-8"	224
S3	4	#4	2	9'-1"	24
S4	76	#4	3	3'-5"	173
S5	6	#4	2	8'-5"	34
S6	1	#4	2	9'-11"	7
✱ S7	6	#5	STR	3'-8"	23
S8	4	#4	2	8'-7"	23
S9	1	#3	STR	1'-10"	1
S10	2	#5	2	8'-8"	18
S11	5	#4	STR	7'-0"	23
REINFORCING STEEL LBS.					1,597

TOTAL REINFORCING STEEL SPAN A

GIRDER 1	LBS. 1,597
GIRDER 2	LBS. 1,634
GIRDER 3	LBS. 1,634
GIRDER 4	LBS. 1,634
GIRDER 5	LBS. 1,597
TOTAL	LBS. 8,096

SPAN A

✱ NOTE: S7 BARS SHALL BE BENT BEFORE SHIPMENT. HEAT BENDING SHALL NOT BE ALLOWED.

REINFORCING STEEL FOR GIRDER 1

BAR	NUMBER	SIZE	TYPE	LENGTH	WEIGHT
S1	169	#4	1	10'-8"	1,204
S2	14	#6	1	10'-8"	224
S3	4	#4	2	9'-1"	24
S4	80	#4	3	3'-5"	183
S5	6	#4	2	8'-5"	34
S6	1	#4	2	9'-11"	7
✱ S7	6	#5	STR	3'-8"	23
S8	4	#4	2	8'-7"	23
S9	1	#3	STR	1'-10"	1
S10	2	#5	2	8'-8"	18
S11	5	#4	STR	7'-0"	23
REINFORCING STEEL LBS.					1,764

REINFORCING STEEL FOR GIRDER 2

BAR	NUMBER	SIZE	TYPE	LENGTH	WEIGHT
S1	169	#4	1	10'-8"	1,204
S2	14	#6	1	10'-8"	224
S3	4	#4	2	9'-1"	24
S4	80	#4	3	3'-5"	183
S5	6	#4	2	8'-5"	34
S6	1	#4	2	9'-11"	7
✱ S7	6	#5	STR	3'-8"	23
S8	4	#4	2	8'-7"	23
S9	1	#3	STR	1'-10"	1
S10	4	#5	2	8'-8"	36
S12	5	#4	STR	12'-11"	43
REINFORCING STEEL LBS.					1,802

REINFORCING STEEL FOR GIRDER 3

BAR	NUMBER	SIZE	TYPE	LENGTH	WEIGHT
S1	171	#4	1	10'-8"	1,218
S2	14	#6	1	10'-8"	224
S3	4	#4	2	9'-1"	24
S4	80	#4	3	3'-5"	183
S5	6	#4	2	8'-5"	34
S6	1	#4	2	9'-11"	7
✱ S7	6	#5	STR	3'-8"	23
S8	4	#4	2	8'-7"	23
S9	1	#3	STR	1'-10"	1
S10	4	#5	2	8'-8"	36
S12	5	#4	STR	12'-11"	43
REINFORCING STEEL LBS.					1,816

REINFORCING STEEL FOR GIRDER 4

BAR	NUMBER	SIZE	TYPE	LENGTH	WEIGHT
S1	173	#4	1	10'-8"	1,233
S2	14	#6	1	10'-8"	224
S3	4	#4	2	9'-1"	24
S4	80	#4	3	3'-5"	183
S5	6	#4	2	8'-5"	34
S6	1	#4	2	9'-11"	7
✱ S7	6	#5	STR	3'-8"	23
S8	4	#4	2	8'-7"	23
S9	1	#3	STR	1'-10"	1
S10	4	#5	2	8'-8"	36
S12	5	#4	STR	12'-11"	43
REINFORCING STEEL LBS.					1,831

REINFORCING STEEL FOR GIRDER 5

BAR	NUMBER	SIZE	TYPE	LENGTH	WEIGHT
S1	173	#4	1	10'-8"	1,233
S2	14	#6	1	10'-8"	224
S3	4	#4	2	9'-1"	24
S4	80	#4	3	3'-5"	183
S5	6	#4	2	8'-5"	34
S6	1	#4	2	9'-11"	7
✱ S7	6	#5	STR	3'-8"	23
S8	4	#4	2	8'-7"	23
S9	1	#3	STR	1'-10"	1
S10	2	#5	2	8'-8"	18
S11	5	#4	STR	7'-0"	23
REINFORCING STEEL LBS.					1,793

TOTAL REINFORCING STEEL SPAN B

GIRDER 1	LBS. 1,764
GIRDER 2	LBS. 1,802
GIRDER 3	LBS. 1,816
GIRDER 4	LBS. 1,831
GIRDER 5	LBS. 1,793
TOTAL	LBS. 9,006

SPAN B

✱ NOTE: S7 BARS SHALL BE BENT BEFORE SHIPMENT. HEAT BENDING SHALL NOT BE ALLOWED.

NOTES

ALL PRESTRESSING STRANDS SHALL BE 7-WIRE LOW-RELAXATION GRADE 270 STRANDS AND SHALL CONFORM TO AASHTO M203 EXCEPT FOR SAMPLING REQUIREMENTS WHICH SHALL BE IN ACCORDANCE WITH THE STANDARD SPECIFICATIONS.

ALL REINFORCING STEEL SHALL BE GRADE 60.

APPLY EPOXY PROTECTIVE COATING TO END OF GIRDER SURFACES INDICATED IN ELEVATION VIEW.

EMBEDDED PLATE "B-1" SHALL BE GALVANIZED IN ACCORDANCE WITH THE STANDARD SPECIFICATIONS.

ANCHOR STUDS SHALL CONFORM TO AASHTO M169 GRADES 1010 THROUGH 1020 OR APPROVED EQUAL, AND SHALL MEET THE TYPE "B" REQUIREMENTS OF SUBSECTION 7.3 OF THE ANSI/AASHTO/AWS D1.5 BRIDGE WELDING CODE.

AT ENDS OF GIRDERS TO BE EMBEDDED IN CONCRETE DIAPHRAGMS OR END WALLS, PRESTRESSING STRANDS MAY EXTEND A MAXIMUM OF 2" BEYOND THE GIRDER ENDS. OTHERWISE, PRESTRESSING STRANDS SHALL BE CUT FLUSH WITH THE GIRDER ENDS.

THE TRANSFER OF LOAD FROM THE ANCHORAGES TO THE GIRDER SHALL BE DONE WHEN CONCRETE HAS REACHED A COMPRESSIVE STRENGTH OF NOT LESS THAN 7500 PSI FOR SPAN A AND 7700 PSI FOR SPAN B.

DEPENDING ON THE TYPE OF SYSTEM USED TO SUPPORT THE DECK SLAB FORMS, PRESET ANCHORS MAY BE NECESSARY IN THE PRESTRESSED CONCRETE GIRDER.

THE TOP SURFACE OF THE GIRDER, EXCLUDING THE OUTSIDE 4", SHALL BE RAKED TO A DEPTH OF 1/4".

WHEN DRAPED STRANDS ARE DETAILED, THE LONGITUDINAL LOCATION OF THE HOLD DOWN DEVICES SHALL BE WITHIN 6" OF THE LOCATION SHOWN AND THE CENTER OF GRAVITY OF THE GROUP OF DRAPED STRANDS SHALL BE LOCATED WITHIN 1/2" OF THE THEORETICAL LOCATION SHOWN.

THE CONTRACTOR HAS THE OPTION TO PROVIDE, AT NO ADDITIONAL COST TO THE DEPARTMENT, 2 ADDITIONAL STRANDS AT THE TOP OF THE GIRDER TO FACILITATE TYING OF THE REINFORCING STEEL. THESE STRANDS SHALL BE PULLED TO A LOAD OF 4500 lbs.

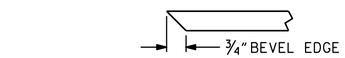

SECTION "F"

(SEE NOTES)

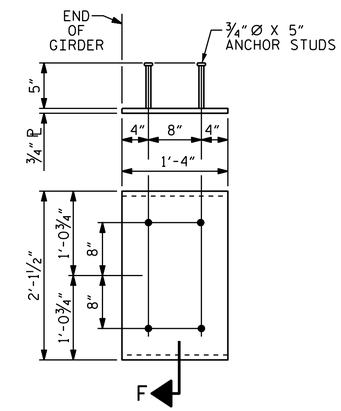

EMBEDDED PLATE "B-1" DETAILS FOR AASHTO TYPE IV GIRDER

(2 REQ'D PER GIRDER)

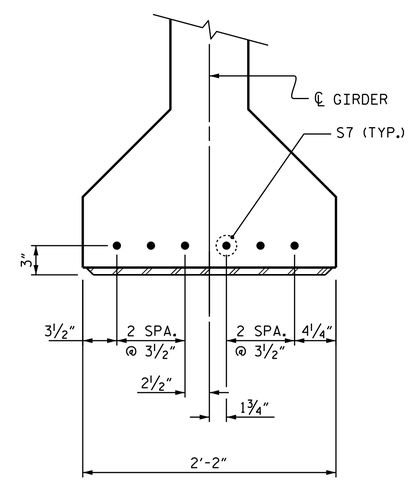

DETAIL "A"

(FOR AASHTO TYPE IV GIRDERS)

PROJECT NO. R-2514B

ONSLOW & JONES COUNTY

STATION: 216+65.63 -L-

SHEET 3 OF 4

STATE OF NORTH CAROLINA
DEPARTMENT OF TRANSPORTATION
RALEIGH

PRESTRESSED CONCRETE GIRDER CONTINUOUS FOR LIVE LOAD DETAILS

NORTH CAROLINA PROFESSIONAL SEAL 14045 ENGINEER TIMOTHY L. COGGINS

Docusigned by: Tim Coggins
DEFD4A8D48FA47B...
3/26/2015

REVISIONS								SHEET NO.
NO.	BY:	DATE:	NO.	BY:	DATE:			S6-014
1			3					TOTAL SHEETS
2			4					37

STR. #6

DRAWN BY : B.N.BARODAWALA DATE : 8-2-13
CHECKED BY : DAVID GLADEN DATE : 1-29-15
DESIGN ENGINEER OF RECORD: TIM COGGINS DATE : 2-10-15

26-MAR-2015 09:41
R:\Structures\FinalPlans\Docusign Setup\406_000_R-2514B_SMU_S6-0.dgn
nruffin