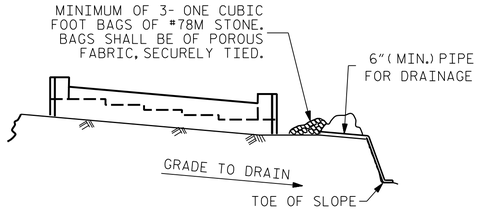

BAGGED STONE AND PIPE SHALL BE PLACED IMMEDIATELY AFTER COMPLETION OF END BENT EXCAVATION. PIPE MAY BE EITHER CONCRETE, CORRUGATED STEEL, CORRUGATED ALUMINUM ALLOY, OR CORRUGATED PLASTIC. PERFORATED PIPE WILL NOT BE ALLOWED.

BAGGED STONE SHALL REMAIN IN PLACE UNTIL THE ENGINEER DIRECTS THAT IT BE REMOVED. THE CONTRACTOR SHALL REMOVE AND DISPOSE OF SILT ACCUMULATIONS AT BAGGED STONE WHEN SO DIRECTED BY THE ENGINEER. BAGS SHALL BE REMOVED AND REPLACED WHENEVER THE ENGINEER DETERMINES THAT THEY HAVE DETERIORATED AND LOST THEIR EFFECTIVENESS.

NO SEPARATE PAYMENT WILL BE MADE FOR THIS WORK AND THE ENTIRE COST OF THIS WORK SHALL BE INCLUDED IN THE UNIT CONTRACT PRICE BID FOR THE SEVERAL PAY ITEMS.

TEMPORARY DRAINAGE AT END BENT

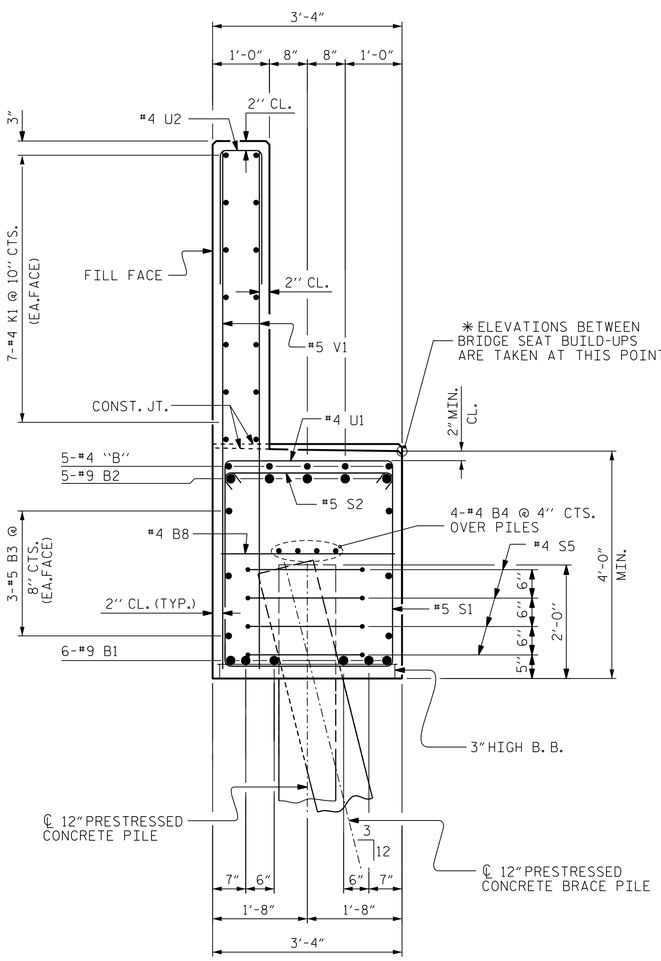

SECTION A-A

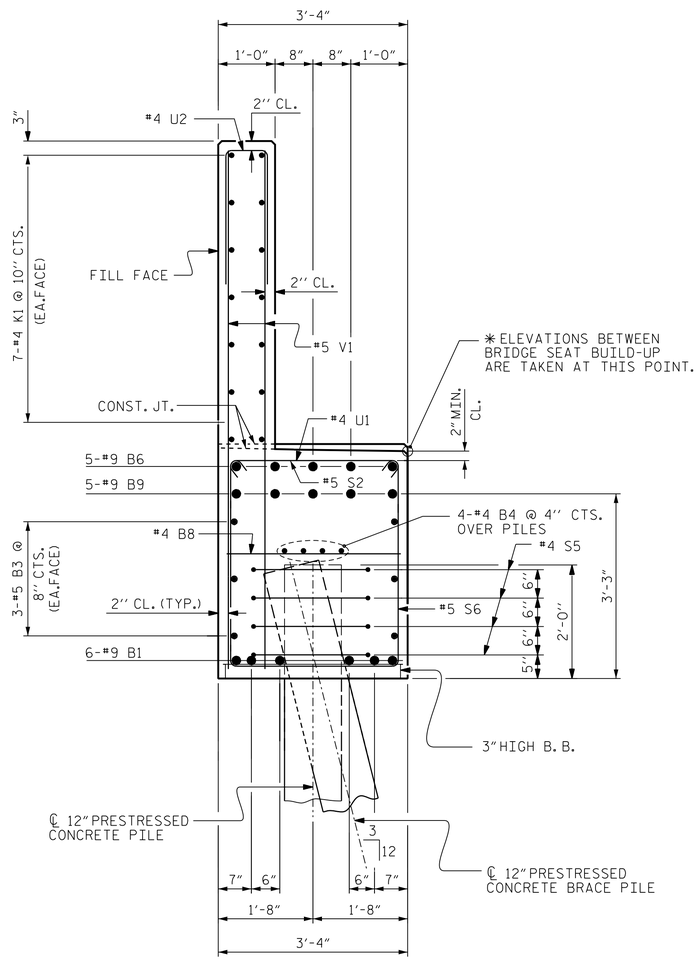

SECTION B-B

BAR TYPES

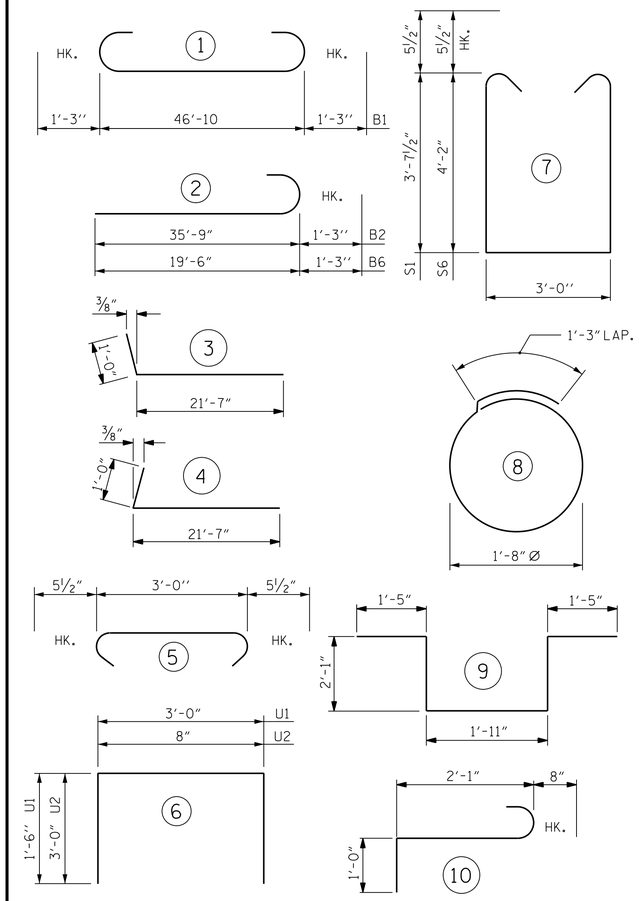

ALL BAR DIMENSIONS ARE OUT TO OUT.

BILL OF MATERIAL
FOR END BENT 2

BAR	NO	SIZE	TYPE	LENGTH	WEIGHT
B1	6	9	1	49'-4"	1006
B2	5	9	2	37'-0"	629
B3	6	5	STR	46'-11"	294
B4	8	4	STR	24'-8"	132
B5	5	4	STR	13'-3"	44
B6	5	9	2	20'-9"	353
B7	5	5	STR	8'-8"	45
B8	16	5	STR	3'-1"	51
B9	2	5	STR	14'-0"	29
H1	38	6	3	22'-7"	1289
H2	34	6	4	22'-7"	1153
K1	28	4	STR	24'-8"	461
K2	8	4	STR	2'-7"	14
S1	31	5	7	11'-2"	361
S2	52	5	5	3'-11"	212
S3	6	6	10	3'-9"	34
S4	6	6	9	8'-11"	80
S5	36	4	8	6'-6"	156
S6	21	5	5	12'-3"	268
U1	37	4	7	6'-0"	148
U2	42	4	7	6'-8"	187
V1	42	5	STR	8'-9"	383
V2	50	5	STR	10'-3"	535
V3	50	5	STR	11'-5"	595

REINFORCING STEEL = LBS. 8459

CLASS A CONCRETE BREAKDOWN

POUR #1 (CAP & LOWER PART OF WINGS)	C.Y.	33.6
POUR #2 (BACKWALL & UPPER PART OF WINGS)	C.Y.	20.8
TOTAL CLASS A CONCRETE	C.Y.	54.4

12" PRESTRESSED CONCRETE PILES

NO. 11	LIN. FT.	275

▲ CONCRETE DISPLACED BY THE 12" CONCRETE PILES HAS BEEN DEDUCTED FROM THE CONCRETE TOTAL.

PROJECT NO. R-2514B
ONSLOW/JONES COUNTY
STATION: 173+54.46 -L-

SHEET 3 OF 3

STATE OF NORTH CAROLINA
DEPARTMENT OF TRANSPORTATION
RALEIGH

SUBSTRUCTURE
END BENT 2
(RIGHT LANE)

NORTH CAROLINA PROFESSIONAL SEAL 20668 ENGINEER PAUL R. HOLSHOUSER

DocuSigned by: Paul R. Holshouser
1C5F9484FEC444D... 2/3/2015

The LOUIS BERGER GROUP, Inc.
1001 Wade Avenue, Suite 400
Raleigh, NC 27605-3322
NC COA No. F-0840

REVISIONS						SHEET NO.
NO.	BY:	DATE:	NO.	BY:	DATE:	S5-71
1			3			TOTAL SHEETS
2			4			75

STR. #5

DRAWN BY : J. MYA DATE : 05/13
CHECKED BY : R. COFFMAN DATE : 07/14
DESIGN ENGINEER OF RECORD : P. HOLSHOUSER DATE : 10/14

G:\CKE Projects\CKE_R2514B Onslow Jones Co\Structures\Site 5\R-2514B_SD_05_EB2_03_.dgn
2/3/2015 6:41:11 PM CKE_R2514B_PDF_full.pltcfg R2514B_str.tbl