NOTES:

FOR REINFORCING STEEL IN BARRIER RAIL, SEE "CONCRETE BARRIER RAIL" SHEET.

FOR SECTION VIEWS, SEE "TYPICAL SECTION DETAILS" SHEET 2 OF 2.

FOR LOCATION OF INTERMEDIATE DIAPHRAGMS, SEE "FRAMING PLAN."

FOR ARC OFFSETS, SEE "ARC OFFSETS" SHEETS.

FOR POUR SEQUENCE SEE "SUPERSTRUCTURE BILL OF MATERIAL" SHEET.

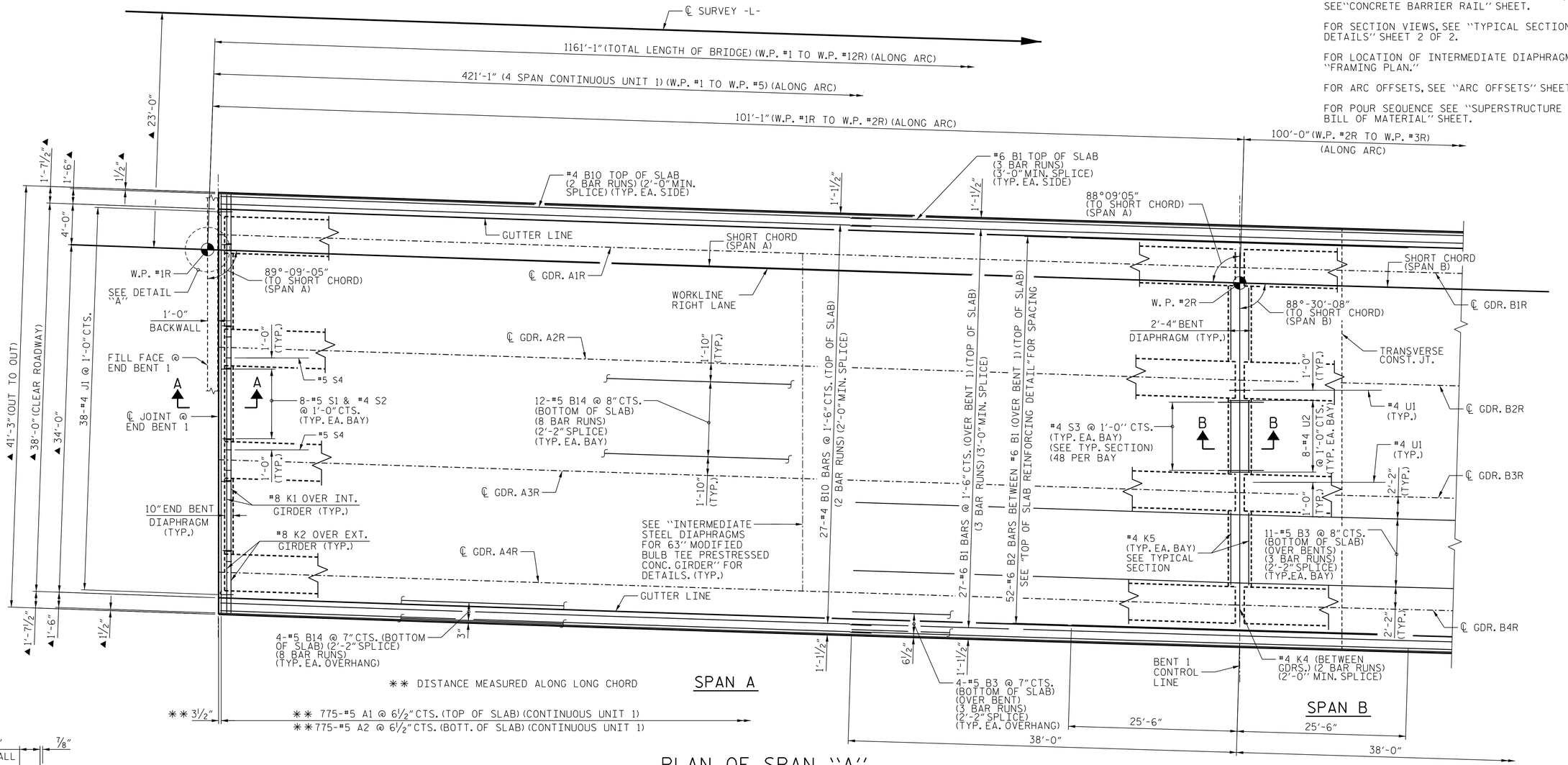

PLAN OF SPAN "A"

("A" BARS ARE SPACED PERPENDICULAR TO THE LONG CHORD)

▲ RADIAL DIMENSIONS

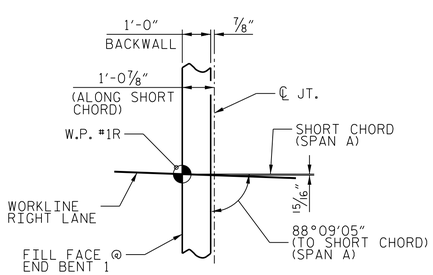

DETAIL "A"

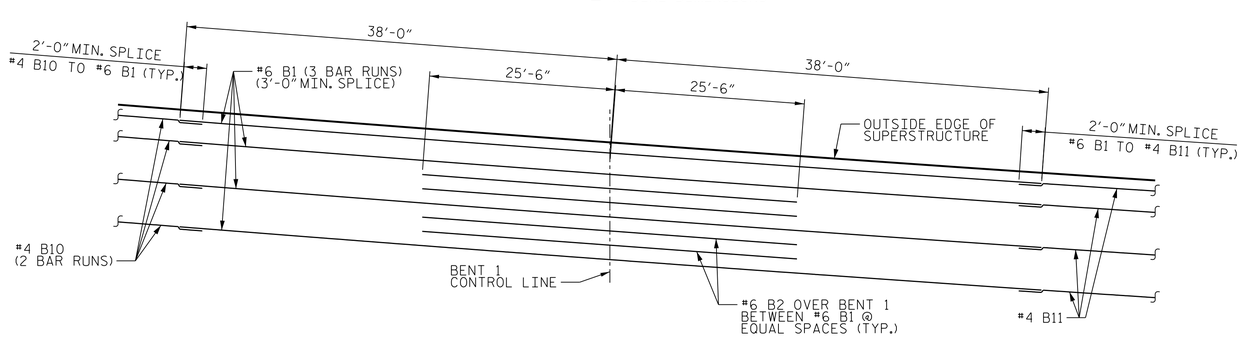

TOP OF SLAB REINFORCING STEEL LAYOUT @ BENT 1

PROJECT NO. R-2514B

ONSLOW/JONES COUNTY

STATION: 173+54.46 -L-

SHEET 1 OF 11

STATE OF NORTH CAROLINA
DEPARTMENT OF TRANSPORTATION
RALEIGH

SUPERSTRUCTURE PLAN OF SPAN "A"

(RIGHT LANE)

NORTH CAROLINA PROFESSIONAL SEAL 20668 ENGINEER PAUL R. HOLSHOUSER

DocuSigned by: Paul R. Holshouser 1C5F9484FEC444D... 2/3/2015

The LOUIS BERGER GROUP, Inc.
1001 Wade Avenue, Suite 400
Raleigh, NC 27605-3322
NC COA No. F-0840

REVISIONS								
NO.	BY:	DATE:	NO.	BY:	DATE:			
1			3					
2			4					

SHEET NO. S5-12

TOTAL SHEETS 75

DRAWN BY :	M. HOGAN	DATE :	12/13
CHECKED BY :	R. COFFMAN	DATE :	07/14
DESIGN ENGINEER OF RECORD :	P. HOLSHOUSER	DATE :	10/14

G:\CKE Projects\CKE_R2514B Onslow Jones Co\Structures\Site 5\R-2514B_SD_05_POS_01.dgn
2/3/2015 6:39:35 PM CKE_R2514B_PDF_full.pltcfg R2514B_str.tbl

STR. #5