DocuSign Envelope ID: 4BD5D88D-35B4-4BCE-AAFC-4C4406D73634

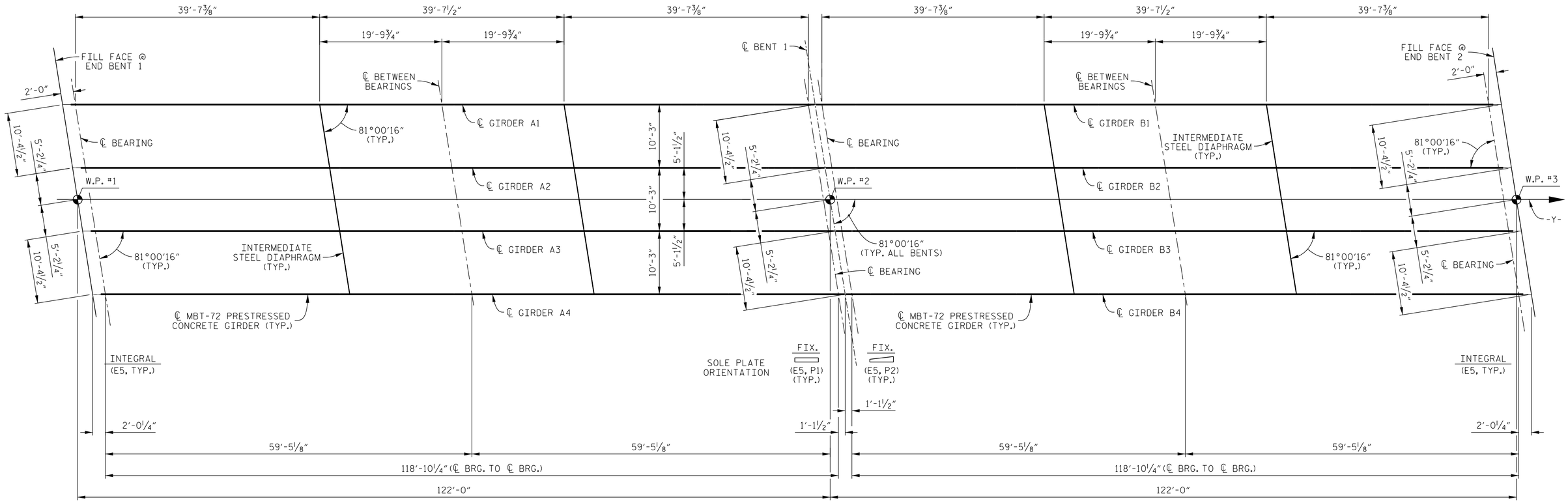

FRAMING PLAN

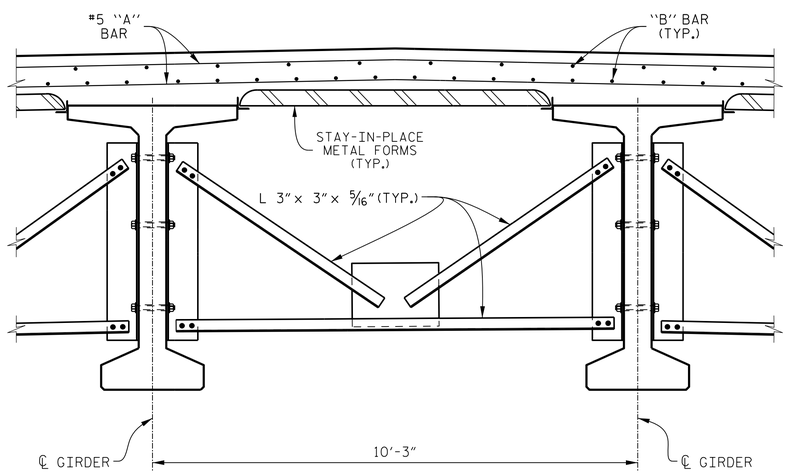

PARTIAL TYPICAL SECTION AT INTERMEDIATE DIAPHRAGM

NOTES

FOR INTERMEDIATE STEEL DIAPHRAGMS, SEE "INTERMEDIATE STEEL DIAPHRAGMS FOR 72" MODIFIED BULB TEE PRESTRESSED CONCRETE GIRDERS" SHEET.

FOR ELASTOMERIC BEARING DETAILS, SEE "ELASTOMERIC BEARING DETAILS PRESTRESSED CONCRETE GIRDER SUPERSTRUCTURE" SHEET.

PROJECT NO. U-2524BC
GUILFORD COUNTY
STATION: 27+40.75 -L-

STATE OF NORTH CAROLINA
DEPARTMENT OF TRANSPORTATION
RALEIGH

SUPERSTRUCTURE

FRAMING PLAN

DRAWN BY : K. E. LOFTON	DATE : 11-14		
CHECKED BY : T. M. HARRIS	DATE : 1-15		
DESIGN ENGINEER : T. M. HARRIS	DATE : 2-15		

PLANS PREPARED BY :
PARSONS
5540 Centerview Drive, Suite 217
Raleigh, NC 27606-3386
NC LICENSE No. F-0246
FOR NORTH CAROLINA DEPARTMENT OF TRANSPORTATION

NORTH CAROLINA PROFESSIONAL SEAL 19299 ENGINEER THOMAS M. HARRIS
3/6/2015

REVISIONS						SHEET No.
No.	BY:	DATE:	No.	BY:	DATE:	S01-10
1			3			TOTAL SHEETS
2			4			27

STR. #1

FILE: j:\u-2524bc\structures\plans\final\U2524BC_SD_fp1.dgn
DATE: 3/5/2015 9:28:16 PM