DocuSign Envelope ID: BE581D98-573E-4249-B1EE-6D9125D62035

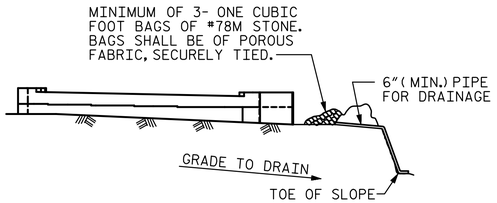

BAGGED STONE AND PIPE SHALL BE PLACED IMMEDIATELY AFTER COMPLETION OF END BENT EXCAVATION. PIPE MAY BE EITHER CONCRETE, CORRUGATED STEEL, CORRUGATED ALUMINUM ALLOY, OR CORRUGATED PLASTIC. PERFORATED PIPE WILL NOT BE ALLOWED.

BAGGED STONE SHALL REMAIN IN PLACE UNTIL THE ENGINEER DIRECTS THAT IT BE REMOVED. THE CONTRACTOR SHALL REMOVE AND DISPOSE OF SILT ACCUMULATIONS AT BAGGED STONE WHEN SO DIRECTED BY THE ENGINEER. BAGS SHALL BE REMOVED AND REPLACED WHENEVER THE ENGINEER DETERMINES THAT THEY HAVE DETERIORATED AND LOST THEIR EFFECTIVENESS.

NO SEPARATE PAYMENT WILL BE MADE FOR THIS WORK AND THE ENTIRE COST OF THIS WORK SHALL BE INCLUDED IN THE UNIT CONTRACT PRICE BID FOR THE SEVERAL PAY ITEMS.

TEMPORARY DRAINAGE AT END BENT

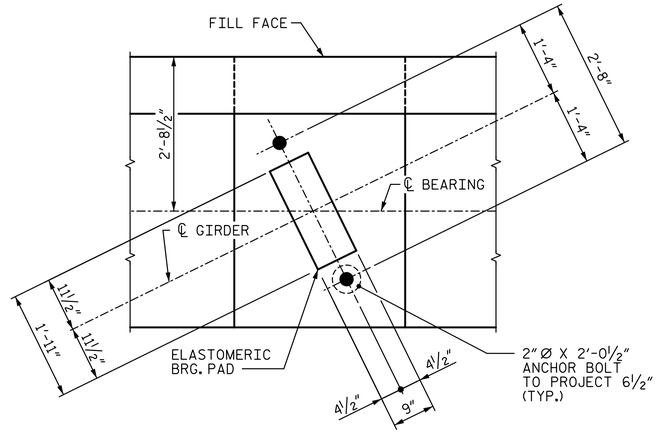

DETAIL "B"

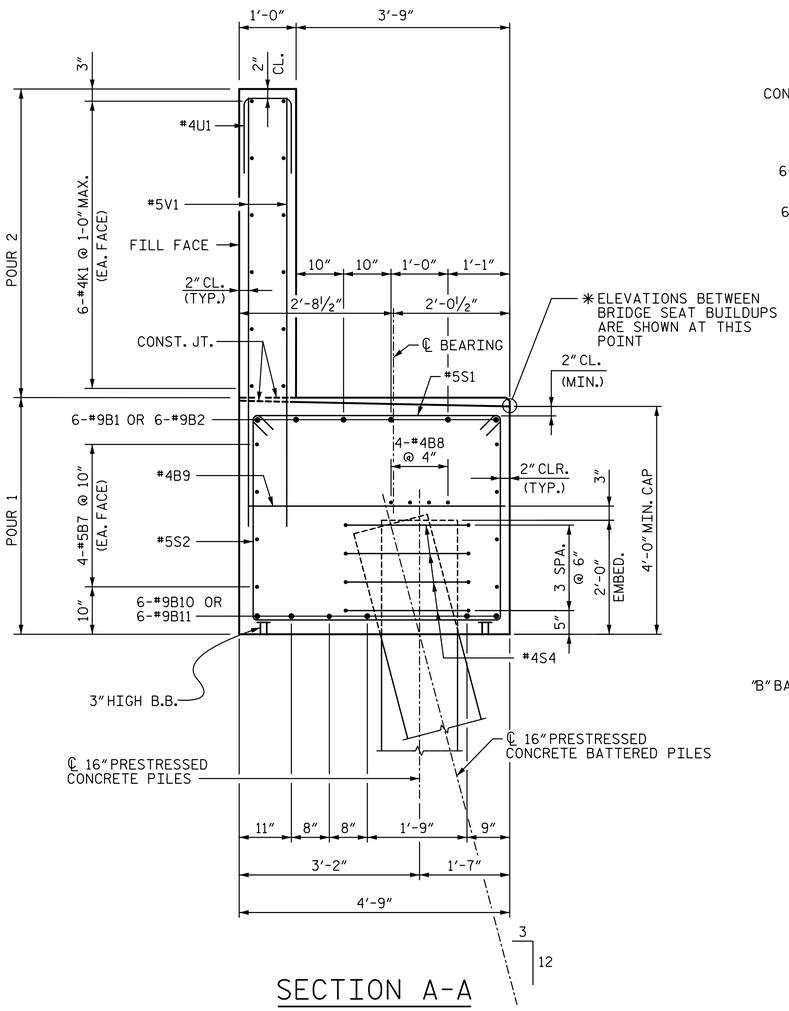

SECTION A-A

(ANCHOR BOLTS NOT SHOWN FOR CLARITY)

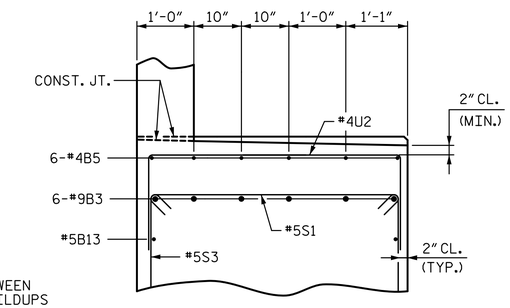

PARTIAL SECTION B-B

(ANCHOR BOLTS NOT SHOWN FOR CLARITY)

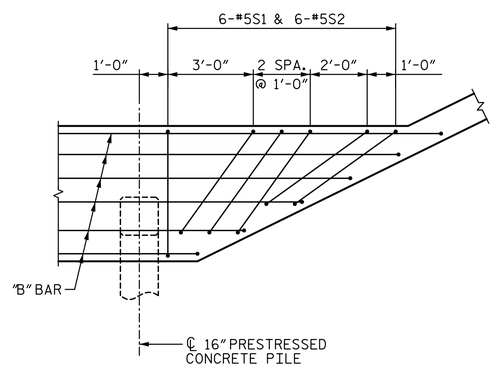

DETAIL "C"

BAR TYPES

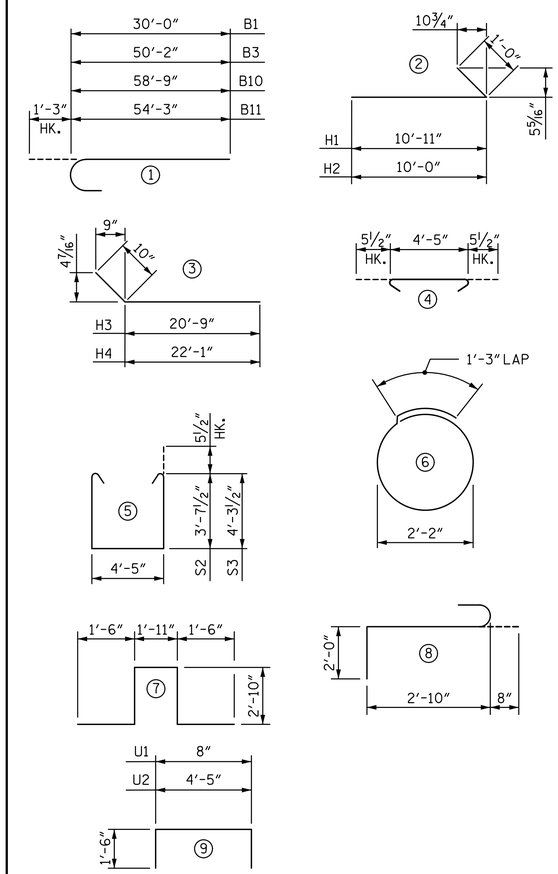

ALL BAR DIMENSIONS ARE OUT TO OUT.

BILL OF REINFORCING

BAR	NO.	SIZE	TYPE	LENGTH	WEIGHT
B1	6	#9	①	31'-3"	638
B2	6	#9	STR	45'-3"	923
B3	6	#9	①	51'-5"	1,049
B4	6	#4	STR	12'-4"	49
B5	12	#4	STR	21'-6"	172
B7	16	#4	STR	54'-9"	914
B8	16	#5	STR	27'-2"	290
B9	25	#4	STR	4'-5"	74
B10	6	#9	①	60'-0"	1,224
B11	6	#9	①	55'-6"	1,132
B12	30	#4	STR	2'-8"	53
B13	2	#5	STR	45'-0"	94
H1	24	#6	②	11'-11"	430
H2	24	#6	②	11'-0"	397
H3	16	#5	③	21'-7"	360
H4	16	#5	③	22'-11"	382
K1	48	#4	STR	28'-6"	914
K2	8	#4	STR	6'-0"	32
S1	117	#5	④	5'-4"	651
S2	61	#5	⑤	12'-7"	801
S3	56	#5	⑤	13'-11"	813
S4	44	#4	⑥	8'-1"	238
S5	3	#6	⑦	10'-7"	48
S6	3	#6	⑧	5'-6"	25
U1	92	#4	⑨	3'-8"	225
U2	56	#4	⑨	7'-5"	277
V1	184	#5	STR	9'-3"	1,775
V2	33	#5	STR	11'-10"	407
V3	55	#5	STR	10'-5"	598

QUANTITIES

		END BENT 2
REINFORCING STEEL	LBS.	14,985
CLASS A CONCRETE		
POUR 1 (CAP & LOWER WING)	: CU. YARDS	87.3
POUR 2 (BACKWALL & UPPER WING)	: CU. YARDS	30.9
TOTAL	: CU. YARDS	118.2
16" PRESTRESSED CONCRETE PILES	(NO.)	12
	LIN. FEET	780.0
PILE REDRIVES	EA.	6

PROJECT NO. R-2514D

JONES & CRAVEN COUNTY

STATION: 526+71.12 -L-
= 16+08.07 -Y6-

SHEET 3 OF 3

DocuSigned by: Adam J. Peter
E3F6AF8D9647424...

NORTH CAROLINA PROFESSIONAL SEAL 35695 ENGINEER ADAM J. PETER

3/10/2015

STATE OF NORTH CAROLINA
DEPARTMENT OF TRANSPORTATION
RALEIGH

SUBSTRUCTURE

END BENT 2

-RIGHT LANE-

DRAWN BY : VMW	DATE : 6-14	DESIGN ENGINEER OF RECORD: P. KELLY	DATE : 6-14
CHECKED BY : PEK	DATE : 6-14		

STV / Ralph Whitehead Associates, Inc.
900 West Trade Street, Suite 715
Charlotte, NC 28202
NC License Number F-0991

REVISIONS						SHEET NO.
NO.	BY:	DATE:	NO.	BY:	DATE:	S12-32
1			3			TOTAL SHEETS
2			4			38

3/6/2015 9:08:46 AM R:\Site 6\usta\Finals\Site 6 RL\412_032_R2514D_SMU_EB203.dgn