DocuSign Envelope ID: BE581D98-573E-4249-B1EE-6D9125D62035

REINFORCING BAR SCHEDULE

MARK	NO.	SIZE	TYPE	LENGTH	WEIGHT	MARK	NO.	SIZE	TYPE	LENGTH	WEIGHT
✳A1	233	#5	STR.	40'-11"	9,944	A216	2	#5	STR.	13'-4"	28
A2	233	#5	STR.	40'-11"	9,944	A217	2	#5	STR.	13'-1"	27
						A218	2	#5	STR.	12'-9"	27
✳A100	36	#5	STR.	21'-9"	817	A219	2	#5	STR.	12'-6"	26
✳A101	36	#5	STR.	20'-6"	770	A220	2	#5	STR.	12'-2"	25
✳A102	36	#5	STR.	19'-2"	720	A221	2	#5	STR.	11'-11"	25
✳A103	36	#5	STR.	17'-11"	673	A222	2	#5	STR.	11'-7"	24
✳A104	36	#5	STR.	16'-7"	623	A223	2	#5	STR.	11'-4"	24
✳A105	36	#5	STR.	15'-4"	576	A224	2	#5	STR.	11'-0"	23
✳A106	36	#5	STR.	14'-0"	526	A225	2	#5	STR.	10'-9"	22
✳A107	36	#5	STR.	12'-9"	479	A226	2	#5	STR.	10'-5"	22
✳A108	36	#5	STR.	11'-5"	429	A227	2	#5	STR.	10'-2"	21
✳A109	36	#5	STR.	10'-2"	382	A228	2	#5	STR.	9'-11"	21
✳A110	2	#5	STR.	13'-5"	28	A229	2	#5	STR.	9'-7"	20
✳A111	2	#5	STR.	13'-2"	27	A230	2	#5	STR.	9'-4"	19
✳A112	2	#5	STR.	12'-10"	27	A231	2	#5	STR.	9'-0"	19
✳A113	2	#5	STR.	12'-7"	26	A232	2	#5	STR.	8'-9"	18
✳A114	2	#5	STR.	12'-3"	26	A233	2	#5	STR.	8'-5"	18
✳A115	2	#5	STR.	12'-0"	25	A234	2	#5	STR.	8'-2"	17
✳A116	2	#5	STR.	11'-9"	25	A235	2	#5	STR.	7'-10"	16
✳A117	2	#5	STR.	11'-5"	24	A236	2	#5	STR.	7'-7"	16
✳A118	2	#5	STR.	11'-2"	23	A237	18	#5	STR.	5'-0"	94
✳A119	2	#5	STR.	10'-10"	23	A238	16	#5	STR.	7'-0"	117
✳A120	2	#5	STR.	10'-7"	22						
✳A121	2	#5	STR.	10'-3"	21	✳B1	56	#5	STR.	46'-0"	2,687
✳A122	2	#5	STR.	10'-0"	21	✳B2	56	#6	STR.	40'-0"	3,364
✳A123	2	#5	STR.	9'-9"	20	✳B3	28	#5	STR.	59'-0"	1,723
✳A124	2	#5	STR.	9'-5"	20	✳B10	54	#6	STR.	40'-0"	3,244
✳A125	2	#5	STR.	9'-2"	19	✳B11	54	#6	STR.	30'-0"	2,433
✳A126	2	#5	STR.	8'-10"	18	B101	72	#5	STR.	45'-9"	3,436
✳A127	2	#5	STR.	8'-7"	18	B102	72	#6	STR.	40'-0"	4,326
✳A128	2	#5	STR.	8'-3"	17	B103	36	#5	STR.	58'-0"	2,178
✳A129	2	#5	STR.	8'-0"	17						
✳A130	2	#5	STR.	7'-9"	16	✳G1	4	#5	STR.	48'-0"	200
✳A131	2	#5	STR.	7'-5"	15						
✳A132	2	#5	STR.	7'-2"	15	✳J1	174	#4	11	1'-5"	165
✳A133	2	#5	STR.	6'-10"	14						
✳A134	2	#5	STR.	6'-7"	14	✳K1	12	#8	1	39'-10"	1,276
✳A135	2	#5	STR.	6'-3"	13	✳K2	8	#8	2	28'-6"	609
✳A136	2	#5	STR.	6'-0"	13	✳K3	8	#6	STR.	10'-0"	120
✳A137	16	#5	STR.	5'-0"	83	✳K4	8	#6	STR.	13'-0"	156
✳A138	8	#5	STR.	7'-0"	58	✳K5	8	#6	STR.	16'-6"	198
✳A139	2	#6	STR.	31'-3"	94	K6	64	#4	STR.	3'-7"	153
✳A140	2	#6	STR.	32'-6"	98	K7	16	#4	STR.	10'-0"	107
✳A141	2	#6	STR.	33'-9"	101	K8	64	#4	STR.	16'-9"	716
						K9	16	#4	STR.	9'-2"	98
A200	36	#5	STR.	21'-6"	807	K10	30	#4	6	23'-6"	471
A201	36	#5	STR.	20'-3"	760	K11	20	#4	7	11'-9"	157
A202	36	#5	STR.	18'-11"	710	K12	8	#4	STR.	13'-1"	70
A203	36	#5	STR.	17'-8"	663						
A204	36	#5	STR.	16'-4"	613	✳S1	80	#5	3	6'-0"	501
A205	36	#5	STR.	15'-1"	566	✳S2	80	#4	4	7'-7"	405
A206	36	#5	STR.	13'-9"	516	✳S3	8	#4	4	3'-5"	18
A207	36	#5	STR.	12'-6"	469	✳S4	8	#4	4	4'-5"	24
A208	36	#5	STR.	11'-2"	419	✳S5	8	#4	4	5'-3"	28
A209	36	#5	STR.	9'-11"	372	✳S6	8	#4	4	6'-3"	33
A210	2	#5	STR.	15'-0"	31	S7	304	#4	5	4'-5"	897
A211	2	#5	STR.	14'-9"	31	S8	10	#4	5	2'-11"	19
A212	2	#5	STR.	14'-6"	30						
A213	2	#5	STR.	14'-3"	30	U1	32	#4	8	16'-6"	353
A214	2	#5	STR.	13'-11"	29	U2	48	#4	9	12'-2"	390
A215	2	#5	STR.	13'-8"	29	U3	48	#4	10	7'-6"	240
						✳EPOXY COATED REINF. STEEL (LBS.)					34,104
						REINF. STEEL (LBS.)					30,299

SUPERSTRUCTURE REINFORCING STEEL LENGTHS ARE BASED ON THE FOLLOWING MINIMUM SPLICE LENGTHS

BAR SIZE	SUPERSTRUCTURE EXCEPT APPROACH SLABS, PARAPET, AND BARRIER RAIL		APPROACH SLABS		PARAPET AND BARRIER RAIL
	EPOXY COATED	UNCOATED	EPOXY COATED	UNCOATED	
#4	2'-0"	1'-9"	2'-0"	1'-9"	2'-9"
#5	2'-6"	2'-2"	2'-6"	2'-2"	3'-5"
#6	3'-0"	2'-7"	3'-10"	2'-7"	4'-4"
#7	5'-3"	3'-6"			
#8	6'-10"	4'-7"			

SUPERSTRUCTURE BILL OF MATERIAL

	CLASS AA CONCRETE	EPOXY COATED STEEL REINFORCING	STEEL REINFORCING
	(CU. YDS.)	(LBS.)	(LBS.)
SPAN A, B & C	--	34,104	30,299
POUR 1	39.3	--	--
POUR 2	209.9	--	--
POUR 3	142.4	--	--
POUR 4	21.2	--	--
POUR 5	21.2	--	--
TOTAL✳	434.0	34,104	30,299

✳ QUANTITIES FOR CONCRETE BARRIER RAIL ARE NOT INCLUDED

GROOVING BRIDGE FLOORS

APPROACH SLABS	1,591 SQ.FT.
BRIDGE DECK	7,642 SQ.FT.
TOTAL	9,233 SQ.FT.

BAR TYPES

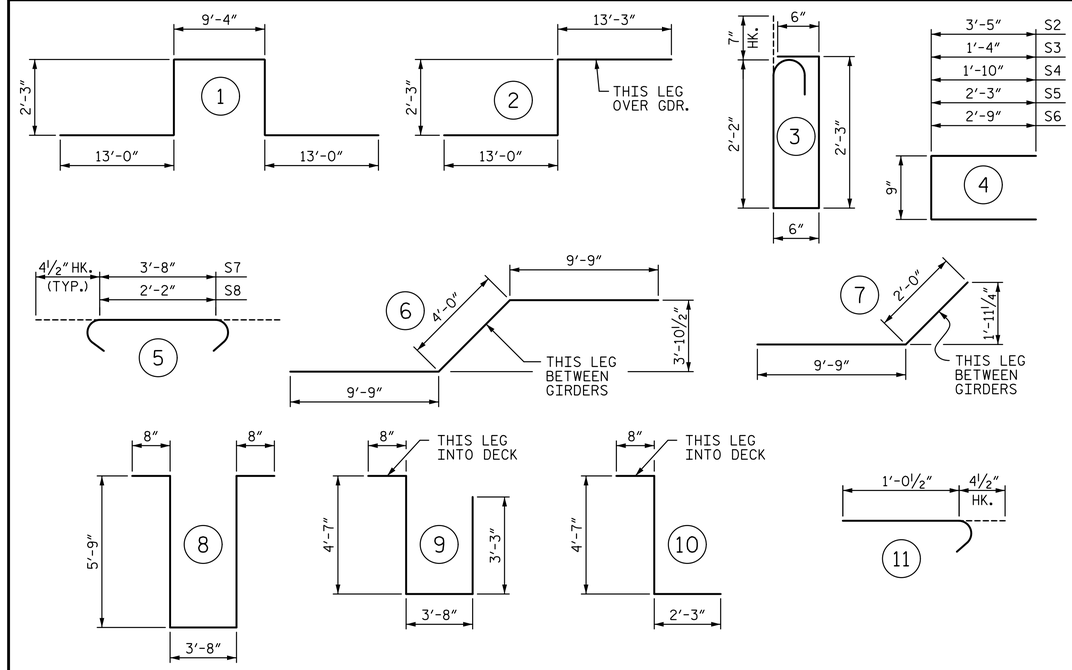

ALL BAR DIMENSIONS ARE OUT TO OUT

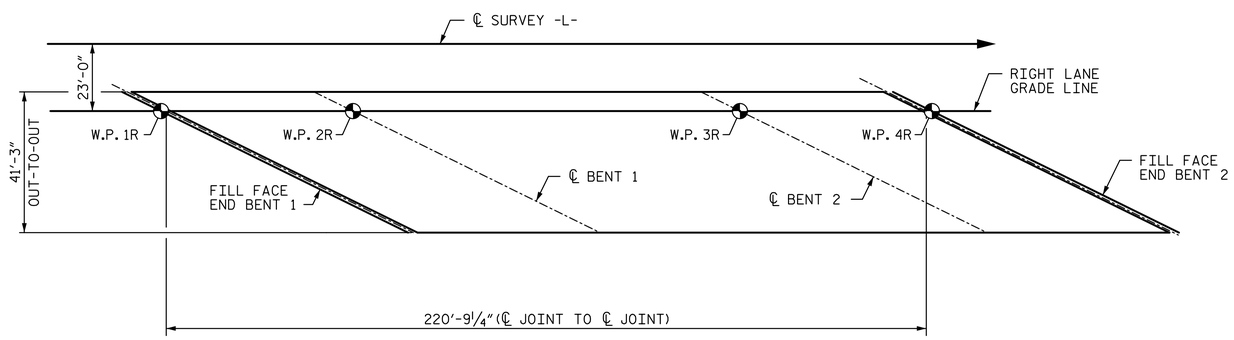

LAYOUT FOR COMPUTING AREA OF REINFORCED CONCRETE DECK SLAB

(SQ. FT. = 9,107)

PROJECT NO. R-2514D

JONES & CRAVEN COUNTY

STATION: 526+71.12 -L-
= 16+08.07 -Y6-

DocuSigned by: Adam J. Peter
E3F6AF8D984742A...

NORTH CAROLINA PROFESSIONAL SEAL 35695 ENGINEER ADAM J. PETER

3/10/2015

STATE OF NORTH CAROLINA
DEPARTMENT OF TRANSPORTATION
RALEIGH

SUPERSTRUCTURE

SUPERSTRUCTURE BILL OF MATERIAL

-RIGHT LANE-

REVISIONS								SHEET NO.
NO.	BY:	DATE:	NO.	BY:	DATE:			S12-23
1			3					TOTAL SHEETS
2			4					38

STV / Ralph Whitehead Associates, Inc.
900 West Trade Street, Suite 715
Charlotte, NC 28202
NC License Number F-0991

DRAWN BY : CLG DATE : 6-14
CHECKED BY : TJT DATE : 6-14

DESIGN ENGINEER OF RECORD: A. PETER DATE : 6-14

3/6/2015 9:08:42 AM R:\Site 6\usta\Finals\Site 6 RL\412_023_R2514D_SMU_SBOM.dgn