DocuSign Envelope ID: 42A70331-C066-4077-8EBC-A5FDE0D82AA3

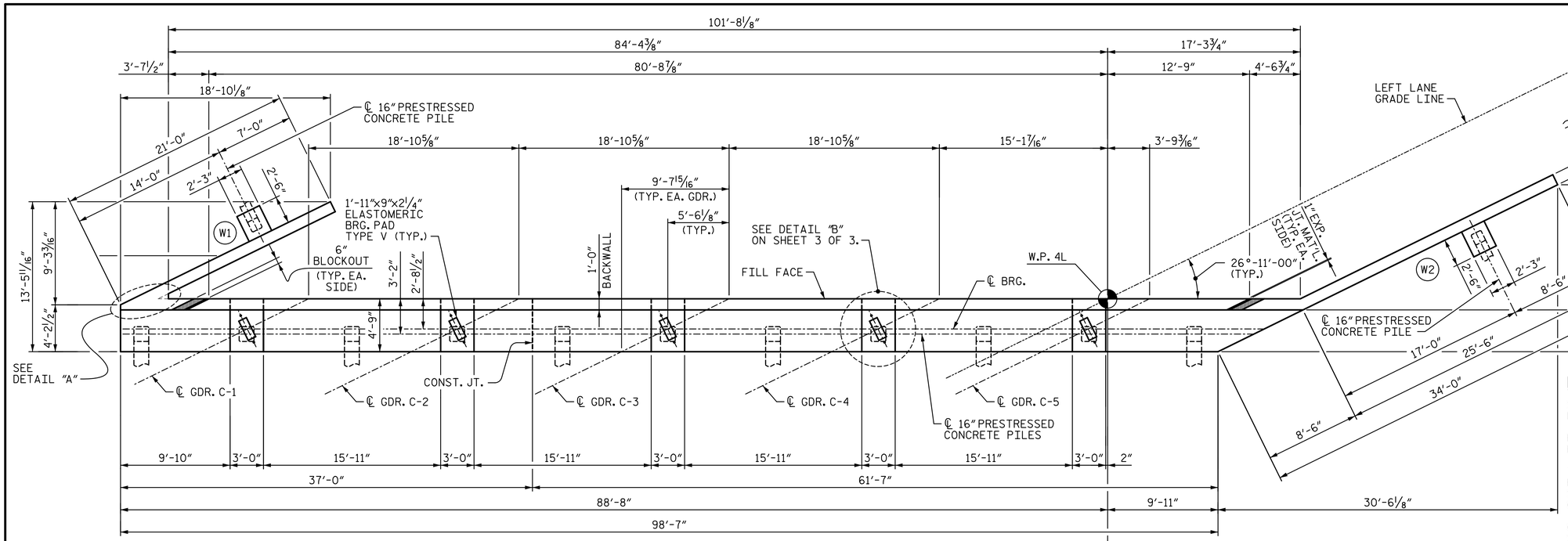

PLAN

NOTES:

STIRRUPS AND "U" BAR IN CAP MAY BE SHIFTED AS NECESSARY TO CLEAR ANCHOR BOLTS.

BACKWALL SHALL BE PLACED BEFORE APPLYING THE EPOXY PROTECTIVE COATING.

THE TOP SURFACE AREAS OF THE END BENT CAP SHALL BE CURED IN ACCORDANCE WITH THE STANDARD SPECIFICATIONS EXCEPT THAT THE MEMBRANE CURING COMPOUND METHOD SHALL NOT BE USED.

CONCRETE IN THE HATCHED AREA OF THE BACKWALL SHALL BE POURED AFTER THE BARRIER RAIL IF CAST IF SLIP FORMING IS USED.

THE TOP SURFACE OF THE CAP EXCEPT THE BRIDGE SEAT BUILDUPS SHALL BE SLOPED TRANSVERSELY FROM THE FILL FACE TO THE OUTSIDE FACE AT THE RATE OF 2%.

FOR OTHER NOTES, SEE "FOUNDATION LAYOUT" SHEET.

SEE SHEET 3 OF 3 FOR SECTION A-A AND B-B.

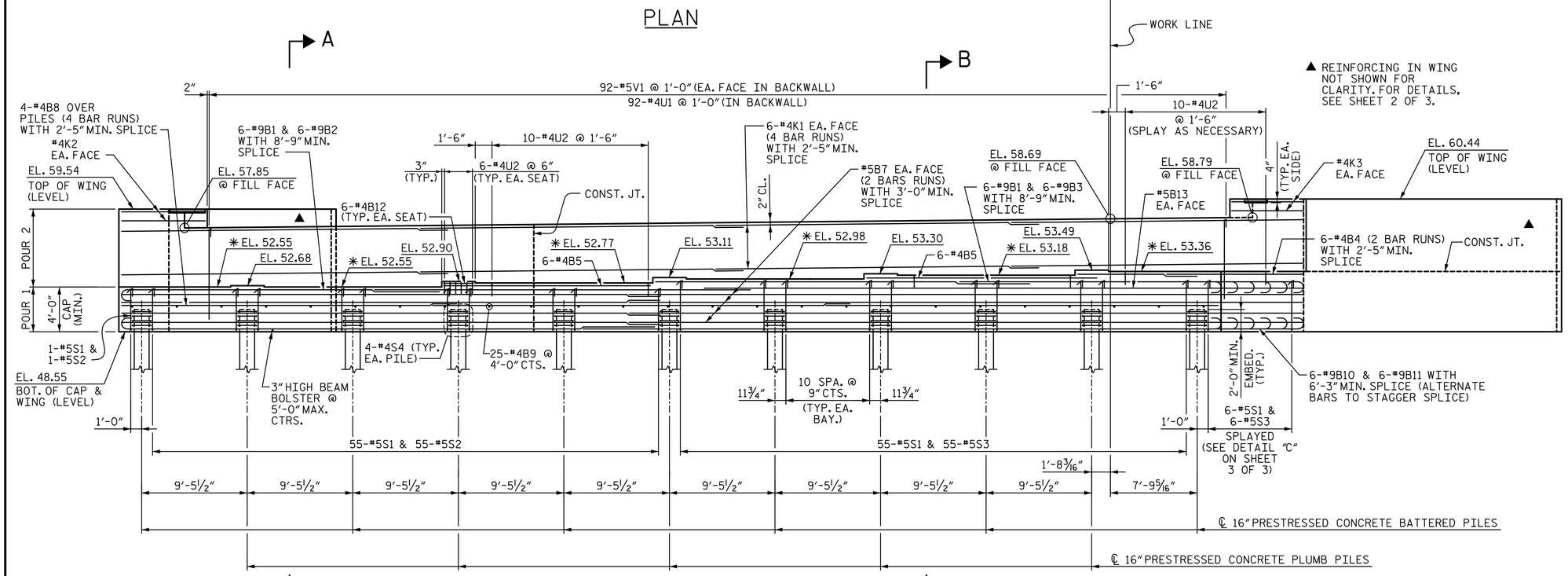

ELEVATION
(WING WALL PILES NOT SHOWN FOR CLARITY)

✳ SEE SECTION A-A ON SHEET 3 OF 3 FOR LOCATION OF ELAVATIONS BETWEEN BRIDGE SEATS.

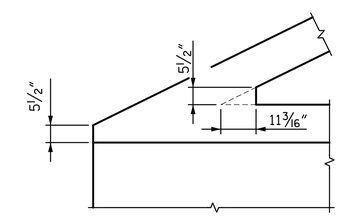

DETAIL "A"

PROJECT NO. R-2514D
JONES & CRAVEN COUNTY
STATION: 526+71.12 -L-
= 16+08.07 -Y6-

SHEET 1 OF 3

STATE OF NORTH CAROLINA
DEPARTMENT OF TRANSPORTATION
RALEIGH

SUBSTRUCTURE

END BENT 2

-LEFT LANE-

DocuSigned by: Adam J. Peter E3F6AF8D9B4742A...
3/10/2015

NORTH CAROLINA PROFESSIONAL SEAL 35695 ENGINEER ADAM J. PETER

STV / Ralph Whitehead Associates, Inc.
900 West Trade Street, Suite 715
Charlotte, NC 28202
NC License Number F-0991

REVISIONS						
NO.	BY:	DATE:	NO.	BY:	DATE:	
1			3			
2			4			

SHEET NO. S11-30
TOTAL SHEETS 38

DRAWN BY : VMW	DATE : 6-14	DESIGN ENGINEER OF RECORD: P. KELLY	DATE : 6-14
CHECKED BY : PEK	DATE : 6-14		

3/6/2015 9:09:35 AM R:\Site 6\custa\Finals\Site 6 LL\41L030_R2514D_SMU_EB201.dgn