DocuSign Envelope ID: 42A70331-C066-4077-8EBC-A5FDE0D82AA3

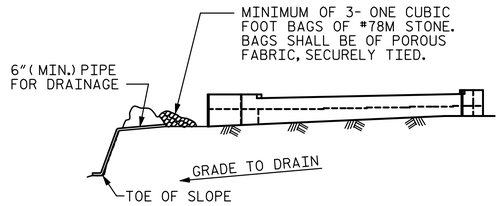

BAGGED STONE AND PIPE SHALL BE PLACED IMMEDIATELY AFTER COMPLETION OF END BENT EXCAVATION. PIPE MAY BE EITHER CONCRETE, CORRUGATED STEEL, CORRUGATED ALUMINUM ALLOY, OR CORRUGATED PLASTIC. PERFORATED PIPE WILL NOT BE ALLOWED.

BAGGED STONE SHALL REMAIN IN PLACE UNTIL THE ENGINEER DIRECTS THAT IT BE REMOVED. THE CONTRACTOR SHALL REMOVE AND DISPOSE OF SILT ACCUMULATIONS AT BAGGED STONE WHEN SO DIRECTED BY THE ENGINEER. BAGS SHALL BE REMOVED AND REPLACED WHENEVER THE ENGINEER DETERMINES THAT THEY HAVE DETERIORATED AND LOST THEIR EFFECTIVENESS.

NO SEPARATE PAYMENT WILL BE MADE FOR THIS WORK AND THE ENTIRE COST OF THIS WORK SHALL BE INCLUDED IN THE UNIT CONTRACT PRICE BID FOR THE SEVERAL PAY ITEMS.

TEMPORARY DRAINAGE AT END BENT

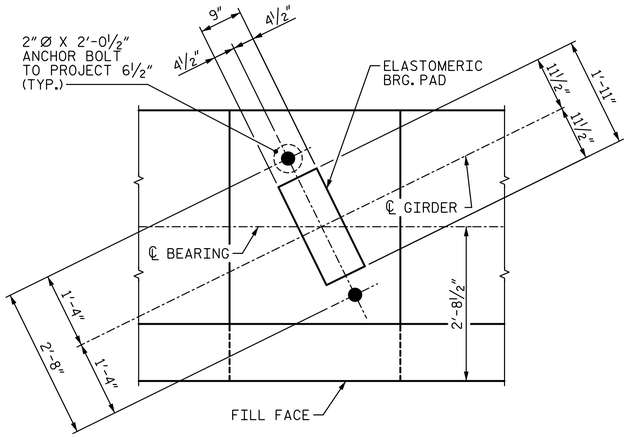

DETAIL "B"

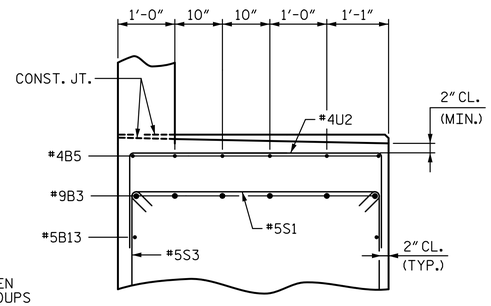

PARTIAL SECTION B-B

(ANCHOR BOLTS NOT SHOWN FOR CLARITY)

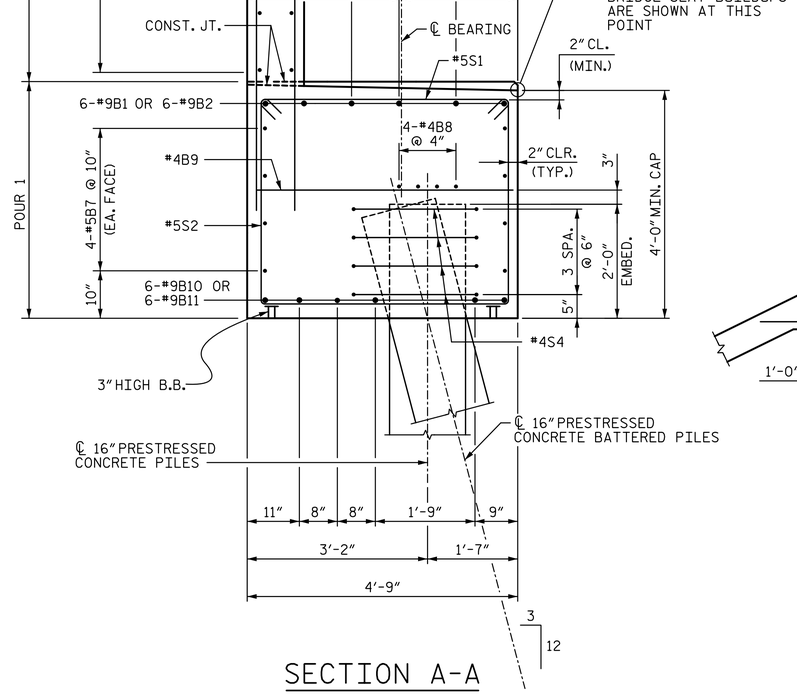

SECTION A-A

(ANCHOR BOLTS NOT SHOWN FOR CLARITY)

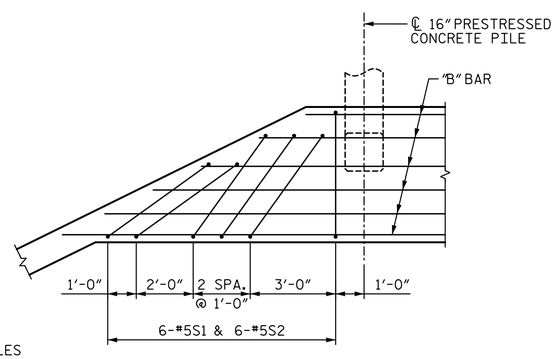

DETAIL "C"

BAR TYPES

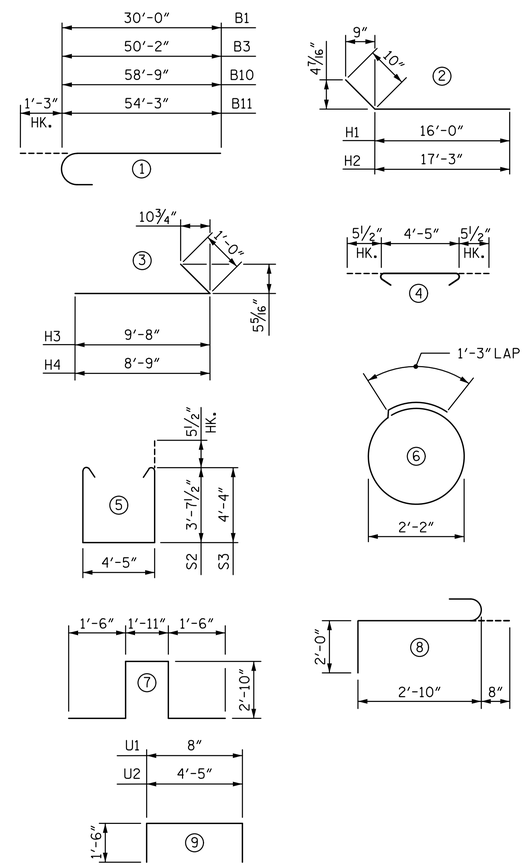

ALL BAR DIMENSIONS ARE OUT TO OUT.

BILL OF REINFORCING

BAR	NO.	SIZE	TYPE	LENGTH	WEIGHT
B1	6	#9	①	31'-3"	638
B2	6	#9	STR	44'-5"	906
B3	6	#9	①	51'-5"	1,049
B4	6	#4	STR	12'-4"	49
B5	12	#4	STR	21'-6"	172
B7	16	#5	STR	54'-9"	914
B8	16	#4	STR	27'-2"	290
B9	25	#4	STR	4'-5"	74
B10	6	#9	①	60'-0"	1,224
B11	6	#9	①	55'-6"	1,132
B12	30	#4	STR	2'-8"	53
B13	2	#5	STR	45'-0"	94
H1	16	#5	②	16'-10"	281
H2	16	#5	②	18'-1"	302
H3	25	#7	③	10'-8"	545
H4	25	#7	③	9'-9"	498
K1	48	#4	STR	28'-9"	922
K2	8	#4	STR	5'-10"	31
S1	117	#5	④	5'-4"	651
S2	61	#5	⑤	12'-7"	801
S3	56	#5	⑤	14'-0"	818
S4	44	#4	⑥	8'-1"	238
S5	3	#6	⑦	10'-7"	48
S6	3	#6	⑧	5'-6"	25
U1	92	#4	⑨	3'-8"	225
U2	56	#4	⑨	7'-5"	277
V1	184	#5	STR	8'-9"	1,679
V2	45	#5	STR	10'-5"	489
V3	31	#5	STR	12'-0"	388

QUANTITIES

		END BENT 1
REINFORCING STEEL	LBS.	14,814
CLASS A CONCRETE		
POUR 1 (CAP & LOWER WING)	: CU. YARDS	86.3
POUR 2 (BACKWALL & UPPER WING)	: CU. YARDS	28.1
TOTAL	: CU. YARDS	114.4
16" PRESTRESSED CONCRETE PILES	(NO.)	12
	LIN. FEET	720.0
PILE REDRIVES	EA.	6

PROJECT NO. R-2514D

JONES & CRAVEN COUNTY

STATION: 526+71.12 -L-
= 16+08.07 -Y6-

SHEET 3 OF 3

DocuSigned by: Adam J. Peter
E3F6AF8D9B4742A...

NORTH CAROLINA PROFESSIONAL SEAL 35695 ENGINEER ADAM J. PETER
3/10/2015

STATE OF NORTH CAROLINA
DEPARTMENT OF TRANSPORTATION
RALEIGH

SUBSTRUCTURE

END BENT 1

-LEFT LANE-

STV / Ralph Whitehead Associates, Inc.
900 West Trade Street, Suite 715
Charlotte, NC 28202
NC License Number F-0991

REVISIONS						SHEET NO.
NO.	BY:	DATE:	NO.	BY:	DATE:	S11-26
1			3			TOTAL SHEETS
2			4			38

DRAWN BY : VMW	DATE : 6-14	DESIGN ENGINEER OF RECORD: P. KELLY	DATE : 6-14
CHECKED BY : PEK	DATE : 6-14		

3/6/2015 9:09:32 AM R:\Site 6\usta\Finals\Site 6 LL\4ll_026_R2514D_SMU_EB103.dgn