DocuSign Envelope ID: CEDE81B6-7578-4B4A-8853-85124678F7F1

NOTES:

STIRRUPS IN CAP MAY BE SHIFTED AS NECESSARY TO CLEAR ANCHOR BOLTS.

FOR "SECTION A-A", "SECTION B-B", "VIEW X-X" & "VIEW Y-Y", SEE SHEET 2 OF 2.

THE TOP SURFACE AREAS OF THE BENT CAPS SHALL BE CURED IN ACCORDANCE WITH THE STANDARD SPECIFICATIONS EXCEPT THE MEMBRANE CURING COMPOUND METHOD SHALL NOT BE USED.

GALVANIZE THE TOP A MINIMUM OF 24 FEET OF EACH INTERIOR BENT PILE . GALVANIZE IN ACCORDANCE WITH SECTION 1076 OF THE STANDARD SPECIFICATIONS.

FOR ADDITIONAL INFORMATION AND NOTES, SEE "GENERAL DRAWING" SHEET 3 OF 5.

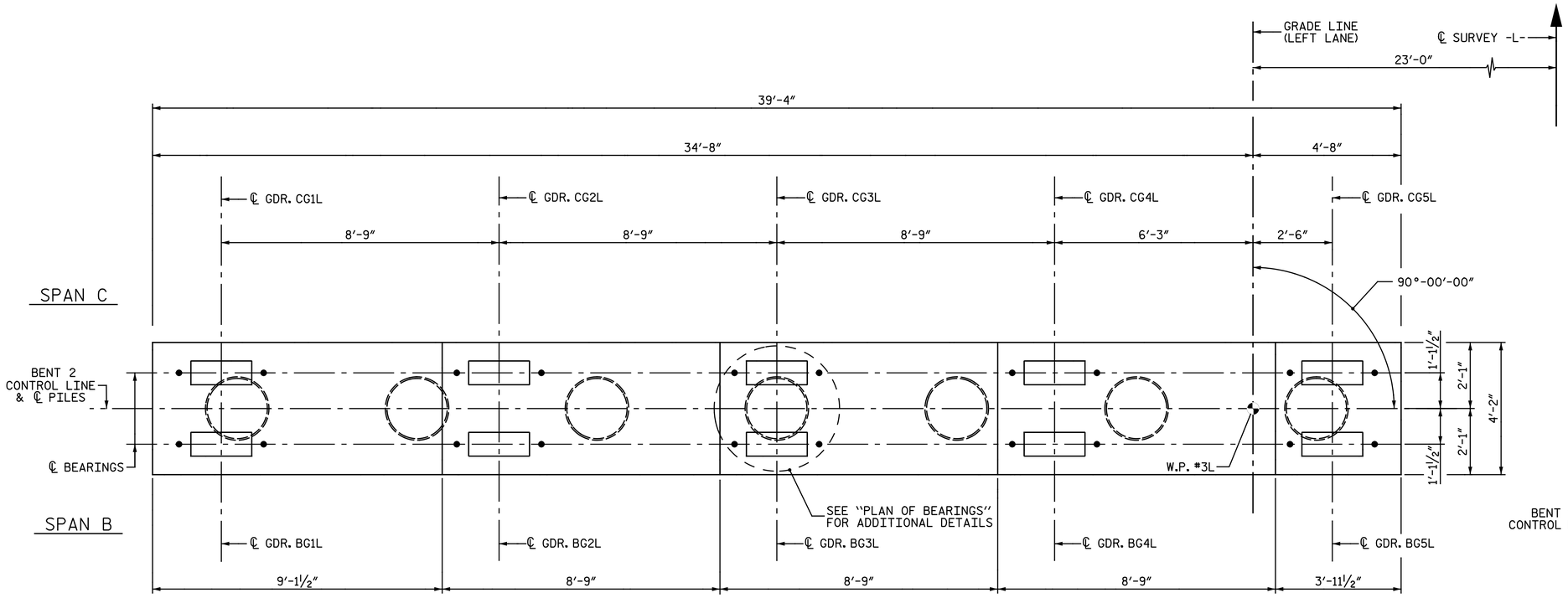

PLAN

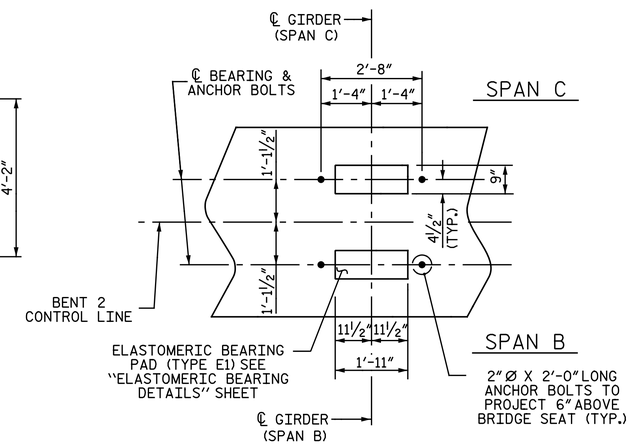

PLAN OF BEARINGS

ALL DIMENSIONS AND DETAILS SHOWN ARE TYPICAL FOR ALL BEARINGS @ EACH BRIDGE SEAT LOCATION.

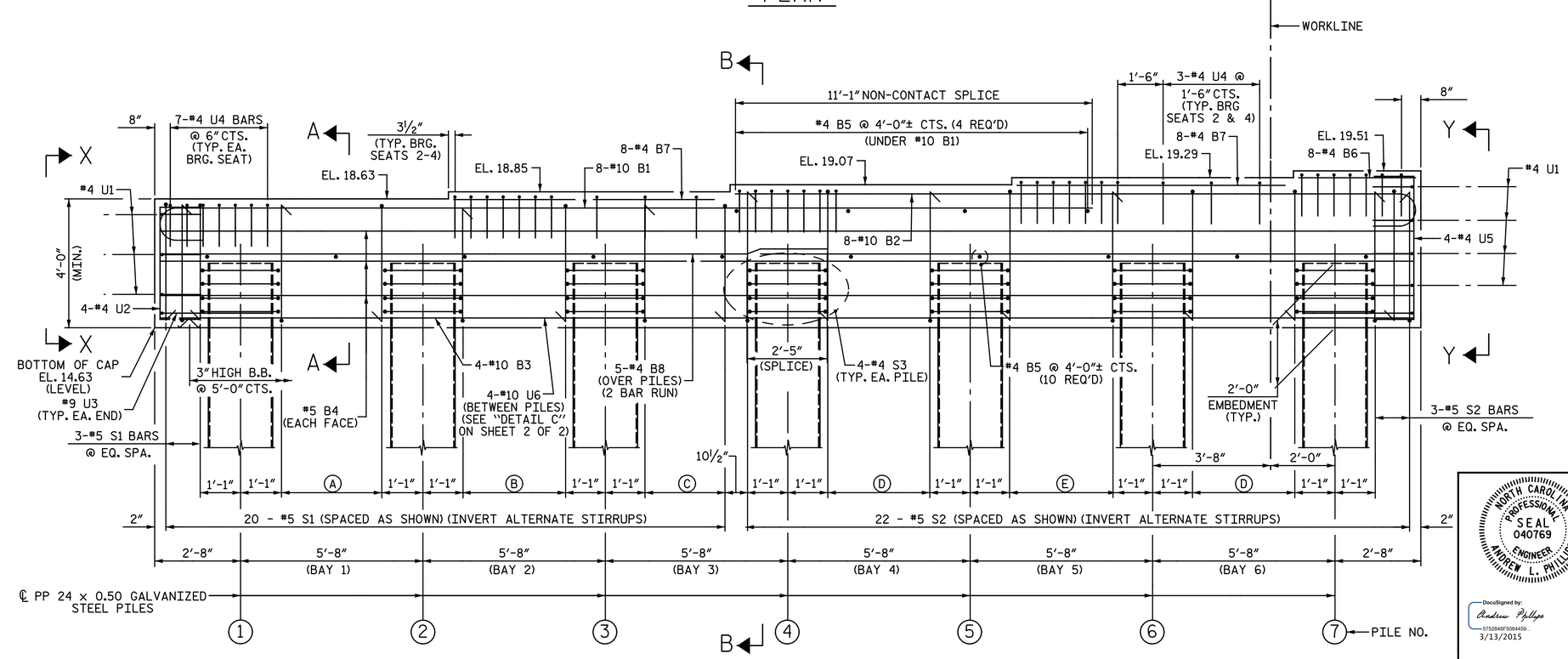

ELEVATION

Ⓐ 5-#5 S1 BARS @ 10½" SPACES
Ⓑ 8-#5 S1 BARS @ 6" SPACES
Ⓒ 4-#5 S1 BARS @ 10½" SPACES
Ⓓ 5-#5 S2 BARS @ 10½" SPACES
Ⓔ 8-#5 S2 BARS @ 6" SPACES

PROJECT NO. R-2514D
JONES COUNTY
STATION: 389+47.50 -L-

SHEET 1 OF 2

NORTH CAROLINA PROFESSIONAL SEAL 040769 ENGINEER ANDREW L. PHILLIPS
DocuSigned by: Andrew Phillips 5752848F5064459... 3/13/2015

NORTH CAROLINA PROFESSIONAL SEAL 25911 ENGINEER DWAIN G. HATHAWAY
DocuSigned by: Dwain Hathaway 283788071DA0490... 3/13/2015

Baker
Michael Baker Engineering
8000 Regency Parkway, Suite 600
Cary, North Carolina 27518
NC License No.: F-1084

STATE OF NORTH CAROLINA
DEPARTMENT OF TRANSPORTATION
RALEIGH

SUBSTRUCTURE

BENT 2

LEFT LANE

REVISIONS								SHEET NO.
NO.	BY:	DATE:	NO.	BY:	DATE:			S07-38
1			3					TOTAL SHEETS
2			4					68

DRAWN BY : N. B. SPEAKS DATE : 5-12-14
CHECKED BY : A. M. HOUSTON DATE : 7-14-14

DWG. 38 OF 68

nbspeaks 3/5/2015 4:12:10 PM
Filename: Y:\Projects\NCDOT\R-2514D\Site 4\Dwgs\Left\Final\407_038_R2514D_SMU_B2_01.dgn

SITE 4