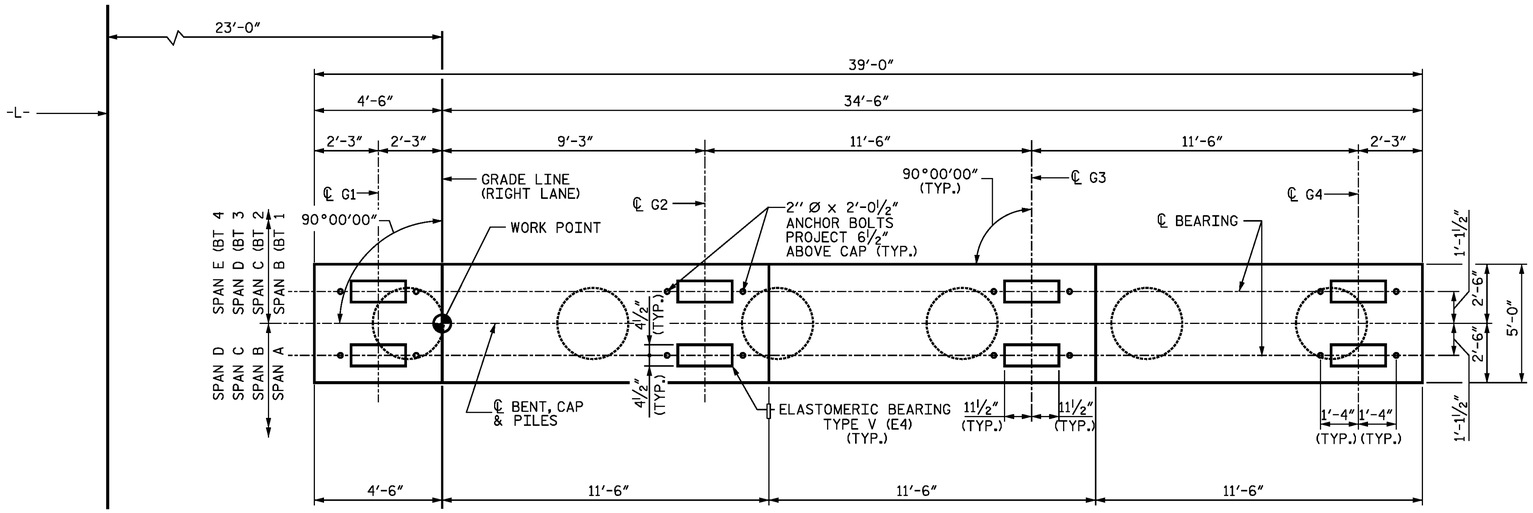

PLAN

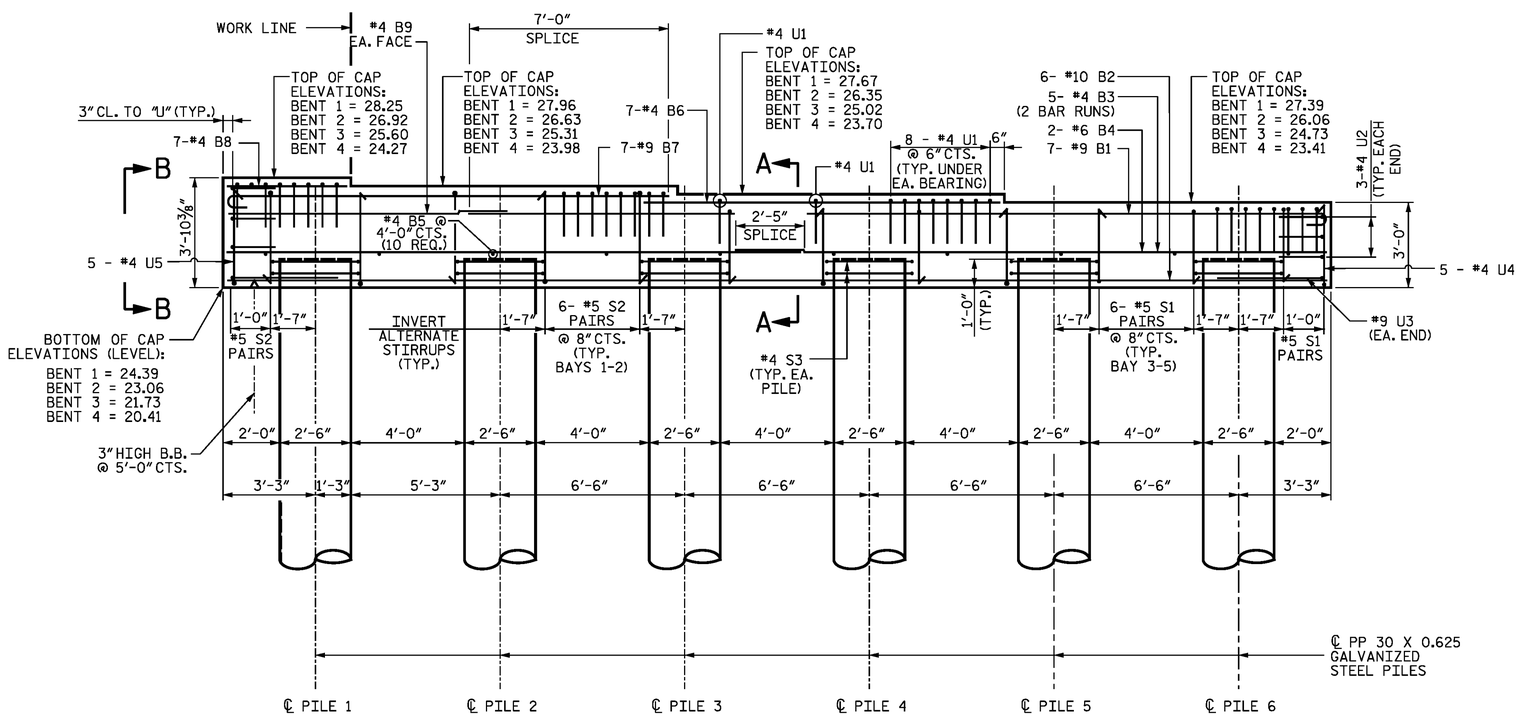

ELEVATION

NOTES

STIRRUPS IN CAP MAY BE SHIFTED AS NECESSARY TO CLEAR ANCHOR BOLTS.

GALVANIZE THE TOP OF EACH INTERIOR BENT PILE A MINIMUM OF 45'. GALVANIZE IN ACCORDANCE WITH SECTION 1076 OF THE STANDARD SPECIFICATIONS.

FOR CONCRETE PLUG AND REINFORCING IN PILES SEE STD DWG NO. SPP4.

PROJECT NO. R-2514D

JONES COUNTY

STATION: 373+02.50 -L-

SHEET 1 OF 2

STATE OF NORTH CAROLINA
DEPARTMENT OF TRANSPORTATION
RALEIGH

SUBSTRUCTURE BENT 1-4

RIGHT LANE

STR-#6

DocuSigned by: DB3C8E45B06D499...

2/12/2015

NORTH CAROLINA PROFESSIONAL SEAL 14114 ENGINEER ROBERT C. LARSON

DESIGN ENGINEER OF RECORD: DATE : 2/12/2015

DRAWN BY : R. A. PRUETT DATE : 03/15/14

CHECKED BY : R. C. LARSON DATE : 03/25/14

ENGINEERS • PLANNERS • ECOLOGISTS LICENSE NUMBER: C-0704

KCI Associates of North Carolina, P.A.

SUITE 1200, LANDMARK CENTER II 4601 SIX FORKS RD. RALEIGH, N.C. 27609-5925 (919) 783-9214

DWG. REF. NO. 25 OF 34

REVISIONS						
NO.	BY:	DATE:	NO.	BY:	DATE:	
1			3			
2			4			

SHEET NO. S06-25

TOTAL SHEETS S06-34