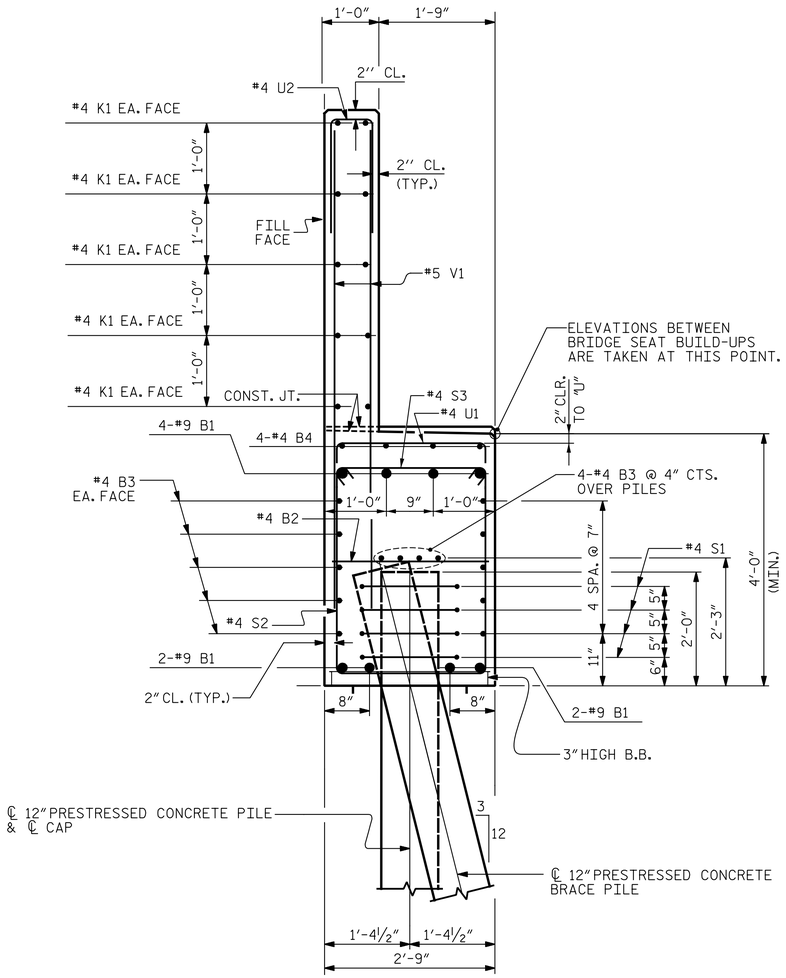

SECTION A-A

BAR TYPES

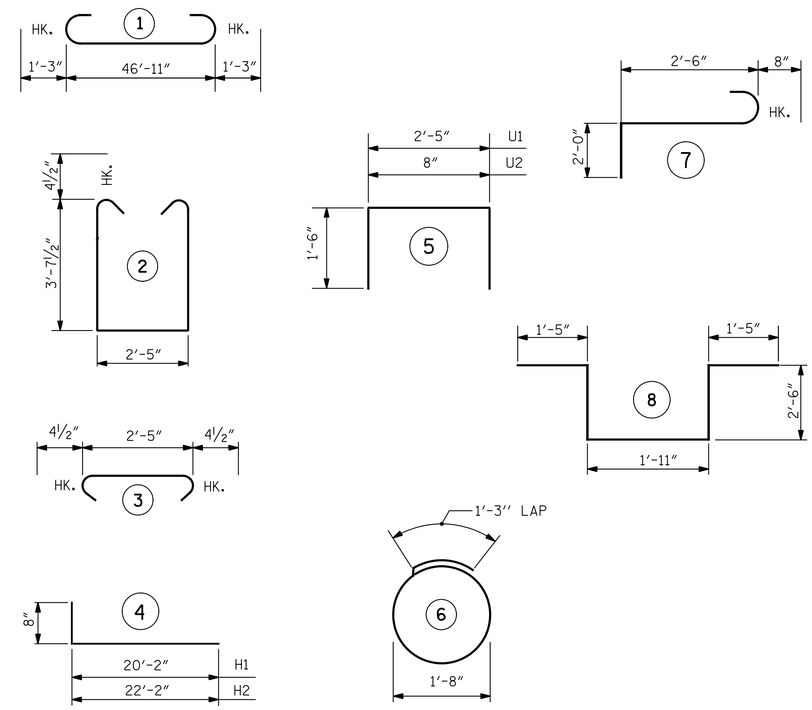

ALL BAR DIMENSIONS ARE OUT TO OUT.

BILL OF MATERIAL

END BENT 1

BAR	NO.	SIZE	TYPE	LENGTH	WEIGHT
B1	8	9	1	49'-5"	1344
B2	12	4	STR.	2'-5"	19
B3	28	4	STR.	24'-8"	461
B4	4	4	STR.	19'-2"	51
B5	4	4	STR.	2'-11"	8
H1	22	4	4	20'-10"	306
H2	30	4	4	22'-10"	458
H3	8	4	STR.	2'-7"	14
K1	20	4	STR.	24'-8"	330
S1	24	4	6	6'-6"	104
S2	42	4	2	10'-5"	292
S3	42	4	3	3'-2"	89
S4	6	6	7	5'-2"	47
S5	6	6	8	9'-9"	88
U1	16	4	5	5'-5"	58
U2	41	4	5	3'-8"	100
V1	82	5	STR.	8'-3"	706
V2	46	5	STR.	9'-11"	476
V3	50	5	STR.	10'-10"	565

REINFORCING STEEL, LB 5516

CLASS A CONCRETE, CY POUR 1 28.1
POUR 2 18.6
TOTAL 46.7

12" PRESTRESSED CONCRETE PILES
NO. 8
LF 280

PILE REDRIVES EA. 3

NOTE: PILE HEADS HAVE BEEN DEDUCTED FROM CLASS A CONCRETE.

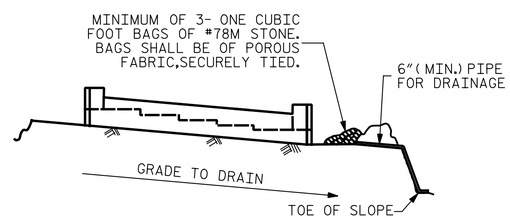

BAGGED STONE AND PIPE SHALL BE PLACED IMMEDIATELY AFTER COMPLETION OF END BENT EXCAVATION. PIPE MAY BE EITHER CONCRETE, CORRUGATED STEEL, CORRUGATED ALUMINUM ALLOY, OR CORRUGATED PLASTIC. PERFORATED PIPE WILL NOT BE ALLOWED.

BAGGED STONE SHALL REMAIN IN PLACE UNTIL THE ENGINEER DIRECTS THAT IT BE REMOVED. THE CONTRACTOR SHALL REMOVE AND DISPOSE OF SILT ACCUMULATIONS AT BAGGED STONE WHEN SO DIRECTED BY THE ENGINEER. BAGS SHALL BE REMOVED AND REPLACED WHENEVER THE ENGINEER DETERMINES THAT THEY HAVE DETERIORATED AND LOST THEIR EFFECTIVENESS.

NO SEPARATE PAYMENT WILL BE MADE FOR THIS WORK AND THE ENTIRE COST OF THIS WORK SHALL BE INCLUDED IN THE UNIT CONTRACT PRICE BID FOR THE SEVERAL PAY ITEMS.

TEMPORARY DRAINAGE AT END BENT

PROJECT NO. R-2514D
JONES COUNTY
STATION: 373+02.50 -L-

SHEET 3 OF 3

STATE OF NORTH CAROLINA
DEPARTMENT OF TRANSPORTATION
RALEIGH

SUBSTRUCTURE END BENT 1

RIGHT LANE

STR-#6

DocuSigned by: DB3C8E45B06D499...

NORTH CAROLINA PROFESSIONAL SEAL 14114 ENGINEER ROBERT C. LARSON

4/13/2015

DESIGN ENGINEER OF RECORD: DATE: 4/13/2015

DRAWN BY: E. C. DECOLA DATE: 03/19/14
CHECKED BY: R. C. LARSON DATE: 04/02/14

ENGINEERS • PLANNERS • ECOLOGISTS LICENSE NUMBER: C-0764
KCI Associates of North Carolina, P.A.
SUITE 220, LANDMARK CENTER II 4601 SIX FORKS RD. RALEIGH, N.C. 27609-5280 (919) 783-9214

DWG. REF. NO. 24 OF 34

REVISIONS						
NO.	BY:	DATE:	NO.	BY:	DATE:	
1			3			
2			4			

SHEET NO. S06-24
TOTAL SHEETS S06-34