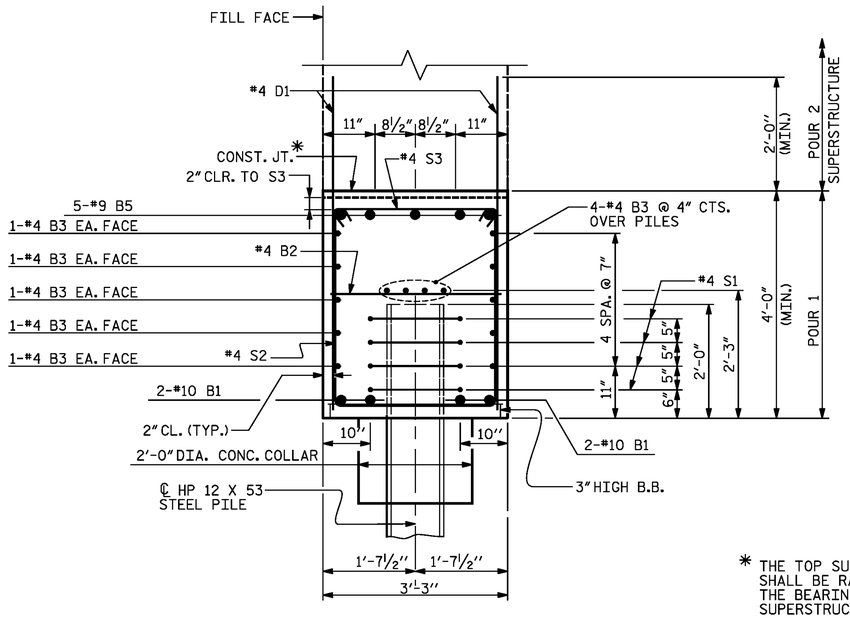

* THE TOP SURFACE OF THE CAP AND WINGS SHALL BE RAKED TO A DEPTH OF ¼" EXCEPT THE BEARING AREAS AND CAP OUTSIDE OF SUPERSTRUCTURE.

SECTION A-A

BAR TYPES

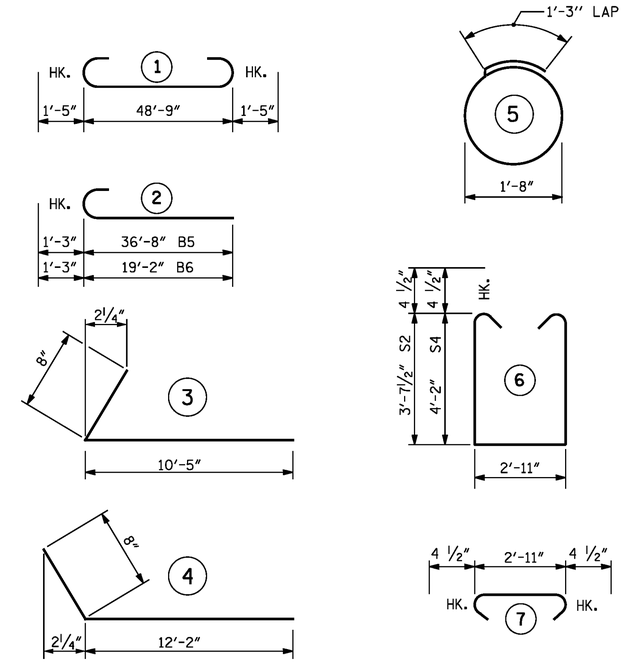

ALL BAR DIMENSIONS ARE OUT TO OUT.

BILL OF MATERIAL

END BENT 1

BAR	NO.	SIZE	TYPE	LENGTH	WEIGHT
B1	4	10	1	51'-7"	888
B2	12	4	STR.	2'-11"	23
B3	28	4	STR.	25'-8"	480
B4	2	4	STR.	14'-7"	19
B5	5	9	2	37'-11"	645
B6	5	9	2	20'-5"	347
D1	62	4	STR.	6'-8"	276
H1	26	5	3	11'-1"	301
H2	42	6	4	12'-10"	810
K1	16	4	STR.	2'-9"	29
S1	28	4	5	6'-6"	122
S2	23	4	6	10'-11"	168
S3	38	4	7	3'-8"	93
S4	15	4	6	12'-0"	120
V1	28	4	STR.	9'-8"	181
V2	32	5	STR.	10'-7"	353

REINFORCING STEEL, LB		4855
CLASS A CONCRETE, CY	POUR 1	30.4
(POUR 2 INCLUDED IN SUPERSTRUCTURE)		
HP 12X53 STEEL PILES	NO.	7
	LF	420
PILE REDRIVES, EA		3

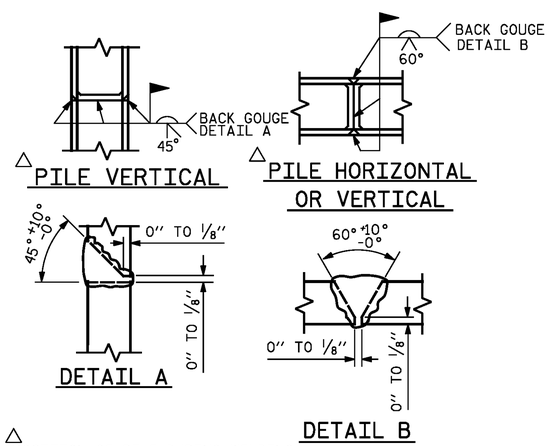

△ POSITION OF PILE DURING WELDING.

PILE SPLICE DETAILS

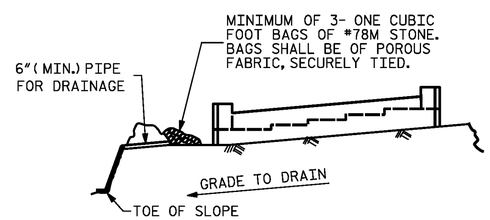

BAGGED STONE AND PIPE SHALL BE PLACED IMMEDIATELY AFTER COMPLETION OF END BENT EXCAVATION. PIPE MAY BE EITHER CONCRETE, CORRUGATED STEEL, CORRUGATED ALUMINUM ALLOY, OR CORRUGATED PLASTIC. PERFORATED PIPE WILL NOT BE ALLOWED.

BAGGED STONE SHALL REMAIN IN PLACE UNTIL THE ENGINEER DIRECTS THAT IT BE REMOVED. THE CONTRACTOR SHALL REMOVE AND DISPOSE OF SILT ACCUMULATIONS AT BAGGED STONE WHEN SO DIRECTED BY THE ENGINEER. BAGS SHALL BE REMOVED AND REPLACED WHENEVER THE ENGINEER DETERMINES THAT THEY HAVE DETERIORATED AND LOST THEIR EFFECTIVENESS.

NO SEPARATE PAYMENT WILL BE MADE FOR THIS WORK AND THE ENTIRE COST OF THIS WORK SHALL BE INCLUDED IN THE UNIT CONTRACT PRICE BID FOR THE SEVERAL PAY ITEMS.

TEMPORARY DRAINAGE AT END BENT

PROJECT NO. R-2514D
JONES COUNTY
STATION: 363+38.90 -L-

SHEET 3 OF 3

STATE OF NORTH CAROLINA
DEPARTMENT OF TRANSPORTATION
RALEIGH

SUBSTRUCTURE
END BENT 1

LEFT LANE STR-#3

DocuSigned by: DB3C8E45B06D499...
2/12/2015

NORTH CAROLINA PROFESSIONAL SEAL 14114 ENGINEER ROBERT C. LARSON

DESIGN ENGINEER OF RECORD: DATE : 2/12/2015
DRAWN BY : R. J. FLORY DATE : 1/27/14
CHECKED BY : R. C. LARSON DATE : 2/06/14

ENGINEERS • PLANNERS • ECOLOGISTS LICENSE NUMBER: C-0704
KCI Associates of North Carolina, P.A.
SUITE 220, LANDMARK CENTER I 4601 SIX FORKS RD. RALEIGH, N.C. 27609-3280 (919) 783-9934

DWG. REF. NO. 17 OF 23

REVISIONS							
NO.	BY:	DATE:	NO.	BY:	DATE:		
1			3				
2			4				

SHEET NO. S03-17
TOTAL SHEETS S03-23