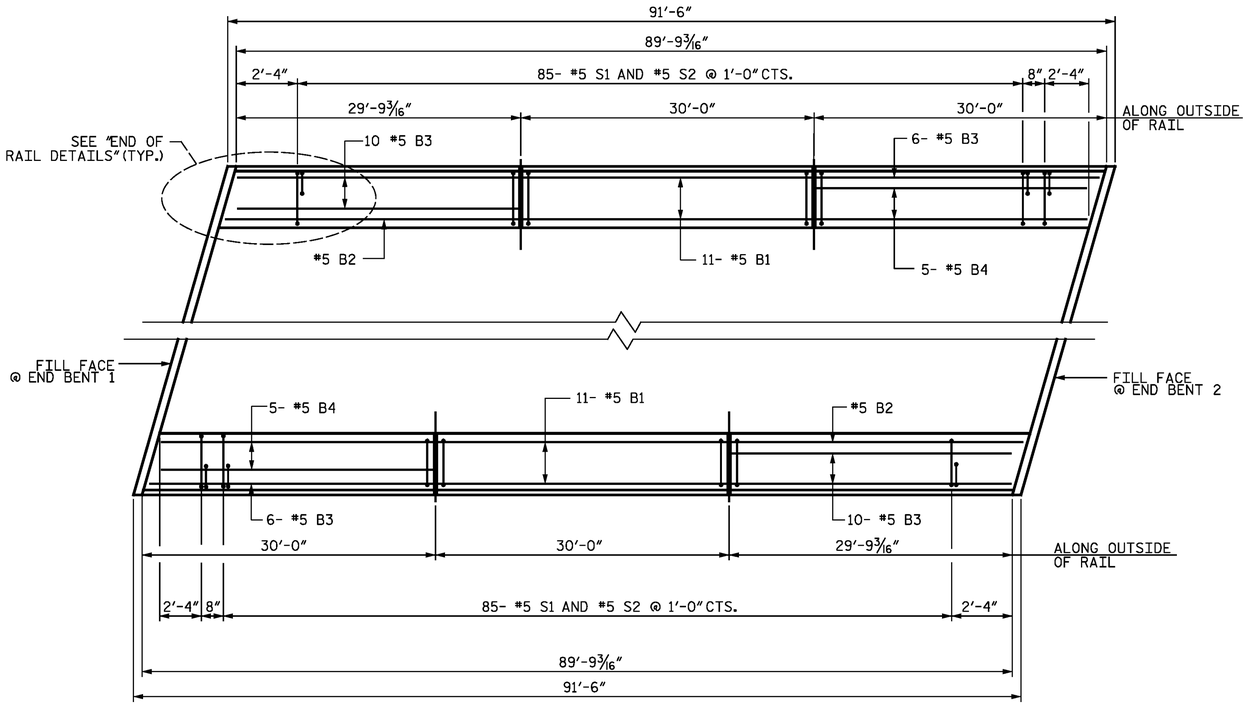

PLAN

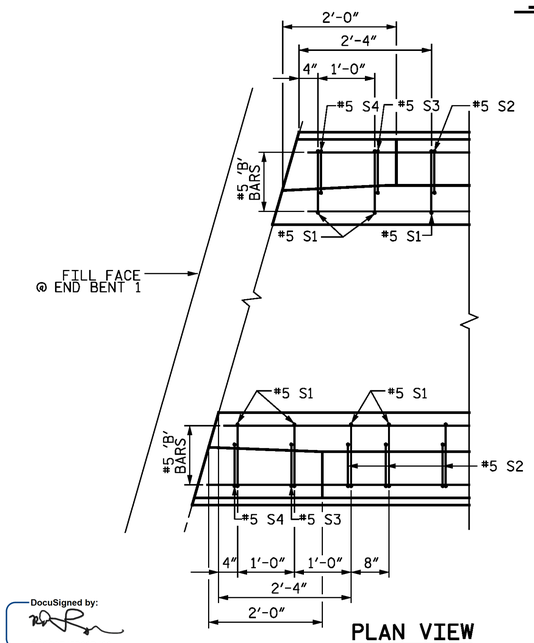

PLAN VIEW

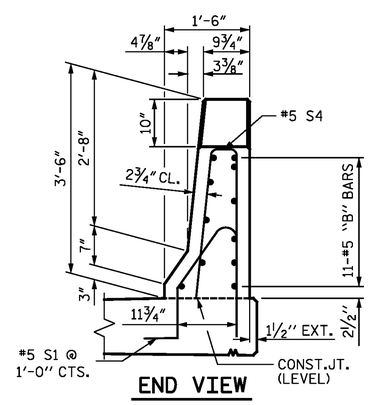

END VIEW

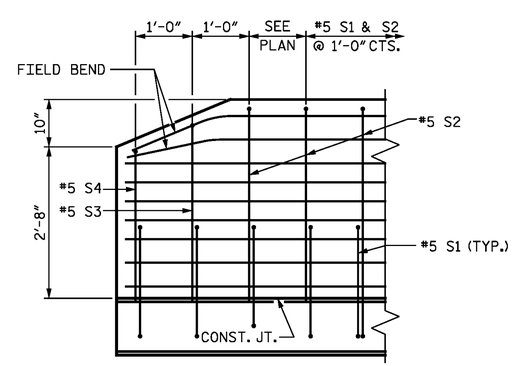

SIDE VIEW

END OF RAIL DETAILS

NOTES

THE BARRIER RAIL IN EACH SPAN SHALL NOT BE CAST UNTIL ALL SLAB CONCRETE IN THAT SPAN HAS BEEN CAST AND HAS REACHED A MINIMUM COMPRESSIVE STRENGTH OF 3,000 PSI.

ALL REINFORCING STEEL IN BARRIER RAILS SHALL BE EPOXY COATED.

GROOVED CONTRACTION JOINTS, 1/2" IN DEPTH, SHALL BE TOOLED IN ALL EXPOSED FACES OF THE BARRIER RAIL AND IN ACCORDANCE WITH ARTICLE 825-10(B) OF THE STANDARD SPECIFICATIONS. THE CONTRACTION JOINT SHALL BE LOCATED AT EACH THIRD POINT BETWEEN BARRIER RAIL EXPANSION JOINTS. ONLY ONE CONTRACTION JOINT IS REQUIRED AT MIDPOINT OF BARRIER RAIL SEGMENTS LESS THAN 20 FEET IN LENGTH AND NO CONTRACTION JOINTS ARE REQUIRED FOR THOSE SEGMENTS LESS THAN 10 FEET IN LENGTH.

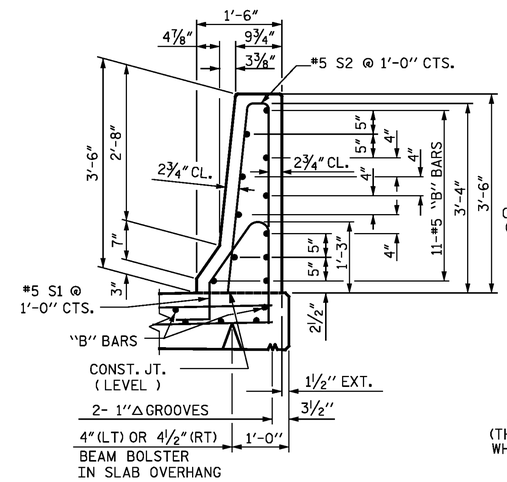

SECTION THRU RAIL

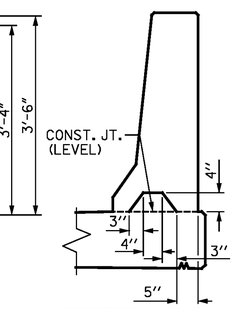

SECTION S-S

AT DAM IN OPEN JOINT
(THIS IS TO BE USED ONLY WHEN SLIP FORM IS USED)

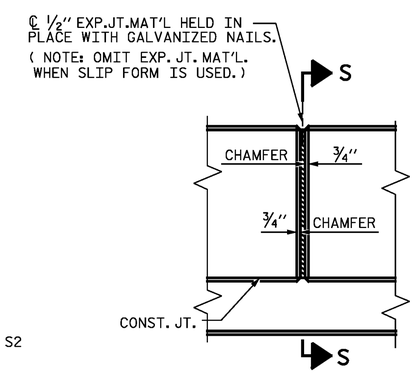

ELEVATION AT EXPANSION JOINTS

BAR TYPES

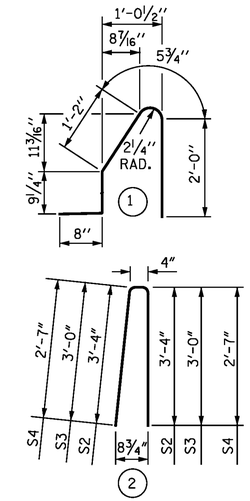

ALL BAR DIMENSIONS ARE OUT TO OUT

BILL OF MATERIAL

FOR CONCRETE BARRIER RAIL ONLY

BAR	NO.	SIZE	TYPE	LENGTH	WEIGHT
* S1	180	#5	1	5'-1"	954
* S2	172	#5	2	7'-0"	1256
* S3	4	#5	2	6'-4"	26
* S4	4	#5	2	5'-6"	23
* B1	22	#5	STR.	29'-8"	681
* B2	2	#5	STR.	29'-9"	62
* B3	32	#5	STR.	29'-6"	985
* B4	10	#5	STR.	29'-2"	304

* EPOXY COATED REINFORCING STEEL	4291 LBS.
CLASS AA CONCRETE	24.3 CU. YDS.
CONCRETE BARRIER RAIL	179.53 LIN. FT.

PROJECT NO. R-2514D

JONES COUNTY

STATION: 363+38.90 -L-

STATE OF NORTH CAROLINA
DEPARTMENT OF TRANSPORTATION
RALEIGH

STANDARD

CONCRETE BARRIER RAIL

STD. NO. CBR1 LEFT LANE STR-#3

DocuSigned by: DB3C8E45B06D499...

2/12/2015

NORTH CAROLINA PROFESSIONAL SEAL 14114 ENGINEER ROBERT C. LARSON

DESIGN ENGINEER OF RECORD: DATE 2/12/2015

ASSEMBLED BY : JM WEATHERBURNE DATE : 7/20/13
CHECKED BY : R.C. LARSON DATE : 8/23/13

DRAWN BY : REV. 10/1/11 MAA/GM
CHECKED BY : REV. 7/12 MAA/GM
REV. 10/12 MAA/GM

ENGINEERS • PLANNERS • ECOLOGISTS LICENSE NUMBER: C-0764
KCI Associates of North Carolina, P.A.
SUITE 220, LANDMARK CENTER I 4000 EX. FORCE RD. RALEIGH, N.C. 27609-5930 (919) 872-2654

DWG. REF. NO. 12 OF 23

REVISIONS							
NO.	BY:	DATE:	NO.	BY:	DATE:	SHEET NO.	S03-12
1			3			TOTAL SHEETS	S03-23
2			4				