PROJECT REFERENCE NO.	SHEET NO.
R-2514D	2A-5

ROADWAY DESIGN ENGINEER

NORTH CAROLINA PROFESSIONAL SEAL 033871 ENGINEER DANIEL W. GARDNER, JR.

3/19/2019

DocuSigned by: Daniel W. Gardner, Jr.

PAVEMENT DESIGN ENGINEER

NORTH CAROLINA PROFESSIONAL SEAL 031484 ENGINEER VLADIMIR G. MITCHEV

3/19/2019

DocuSigned by: Vladimir Mitchev

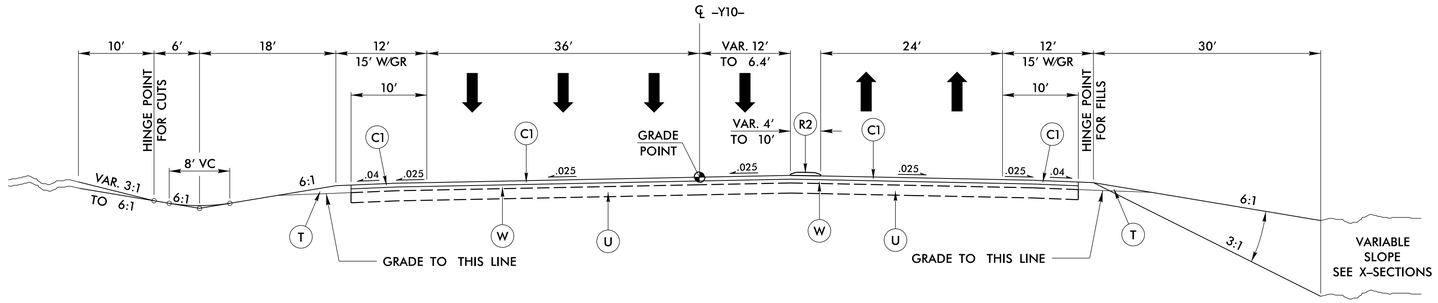

TYPICAL SECTION NO. 12

USE TYPICAL SECTION NO. 12 FOR:

-Y10- STA. 15+76.00 TO -Y10- STA. 16+16.39

NOTES:

1) MILL EXISTING PAVEMENT AS DIRECTED BY ENGINEER

-Y10- STA. 16+16.39 TO -Y10- STA. 17+00.00

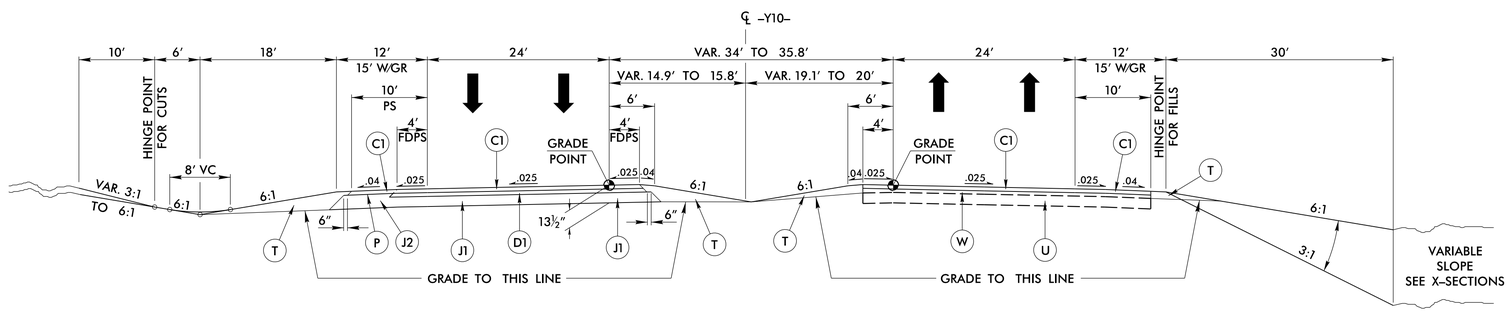

TYPICAL SECTION NO. 13

USE TYPICAL SECTION NO. 13 FOR:

-Y10- STA. 17+00.00 TO -Y10- STA. 18+33.89

NOTES:

1) MILL EXISTING PAVEMENT AS DIRECTED BY ENGINEER

-Y10- STA. 18+33.89 TO -Y10- STA. 23+06.00

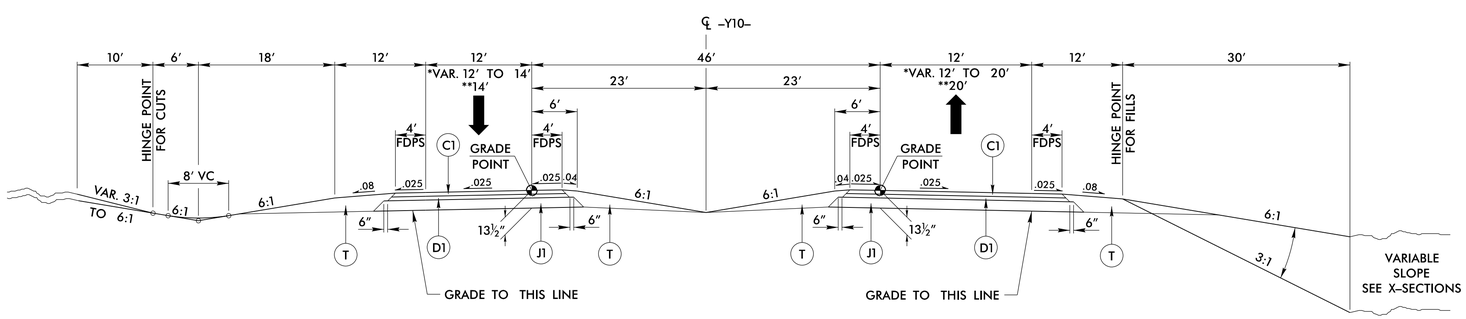

TYPICAL SECTION NO. 14

USE TYPICAL SECTION NO. 14 FOR:

-Y10- STA. 23+06.00 TO -Y10- STA. 24+70.00

*-Y10- STA. 24+70.00 TO -Y10- STA. 26+00.00

**-Y10- STA. 26+00.00 TO -Y10- STA. 27+38.37 LT LANE (BEGIN BRIDGE)

**-Y10- STA. 26+00.00 TO -Y10- STA. 27+41.37 RT LANE (BEGIN BRIDGE)

**-Y10- STA. 29+23.58 LT LANE (END BRIDGE) TO -Y10- STA. 30+00.00

**-Y10- STA. 29+23.76 RT LANE (END BRIDGE) TO -Y10- STA. 30+00.00

NOTE:

1) USE 3:1 FILL SLOPE IN WETLAND AREAS

-Y10- STA. 29+44.42 (LT) TO -Y10- STA. 30+00.00 (LT)

PAVEMENT SCHEDULE

C1	3″ S9.5B
C2	3″ S9.5C
C3	VAR. S9.5B
D1	2 1/2″ I19.0B
D2	4″ I19.0B
D3	4″ I19.0C
D4	VAR. I19.0B
E1	4″ B25.0B
E2	4 1/2″ B25.0B
J1	8″ ABC
J2	VAR. ABC
L	3″ CL IV AGG. STAB.
P	.35 PRIME COAT
R1	2′-6″ CURB AND GUTTER
R2	5″ MONOLITHIC ISLAND
S	4″ SIDEWALK
T	EARTH MATERIAL
U	EX. PAVEMENT
V	MILLING
W	WEDGING
Y	RUMBLE STRIPS

6/2/99

3/15/2019
R:\Roadway\Proj\R2514D\Roadway\Proj\R2514D_Rdy_typ.dgn
bhuffman