DocuSign Envelope ID: EE4FA1DF-436F-4CDF-A5BE-4C770D61069F

PROJ. REFERENCE NO.	SHEET NO.
U-3622B	2C-4

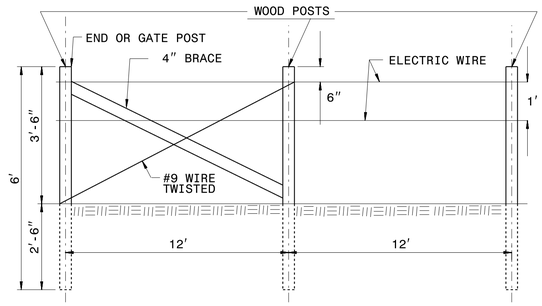

ONE STRAND ELECTRIC BARBED WIRE FENCE END OR GATE LOCATION

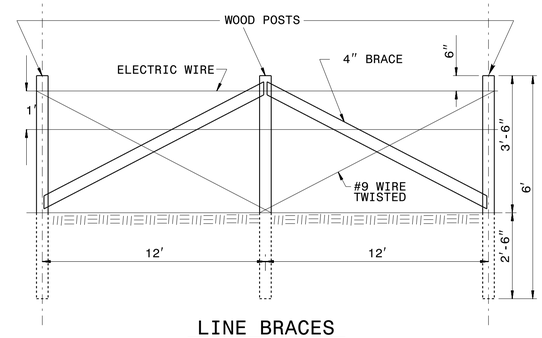

LINE BRACES

NOTES :

ELECTRIC WIRE, GATES, LATCH DEVICES, HINGES, AND INSULATORS SHALL BE OF A TYPE AND INSTALLED AS APPROVED BY THE ENGINEER.

CLASS B CONCRETE ANCHOR TO BE USED AT GATE POSTS OR WHERE REQUIRED BY SOIL CONDITIONS. CONCRETE ANCHOR MAY ALO BE USED IN LIEU OF SETTING POSTS TO THEIR REQUIRED DEPTH.

THE FENCE SHALL BE INSTALLED FACING THE PROPERTY OWNER EXCEPT ON HORIZONTAL CURVES GREATER THAN 3 DEGREES WHERE THE FENCE SHALL BE INSTALLED AS TO PULL AGAINST ALL POSTS.

MAXIMUM SPACING OF LINE BRACES IS 6″.

ALL POSTS AND BRACES MAY BE EITHER ROUND OR SQUARE AT THE OPTION OF THE CONTRACTOR, PROVIDED THAT THE SAME TYPE IS USED THROUGHOUT THE PROJECT FOR BOTH POSTS AND BRACES. DIMENSIONS SHOW THE DIAMETER OF ROUND POSTS OR EDGE DIMENSIONS OF SQUARE POSTS.

THE BRACE WIRE IS TO BE PLACED AROUND POSTS WITH ONE WIRE ON EACH SIDE OF THE BRACE. ALL BRACE WIRES TO BE TIGHTENED BY TWISTING BETWEEN BRACE AND EACH POST.

POSTS TO BE NOTCHED 1″ FOR BRACES AND ATTACHED TO BRACES USING TWO GALVANIZED 12D NAILS AT EACH END OR AS DIRECTED BY THE ENGINEER.

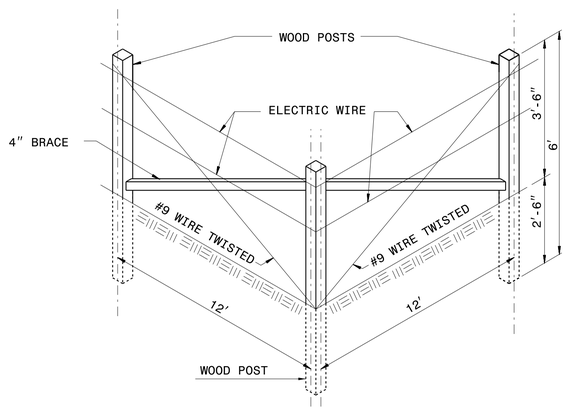

FENCE CORNER

TO BE USED WHEN CORNER ANGLE IS 15° OR GREATER

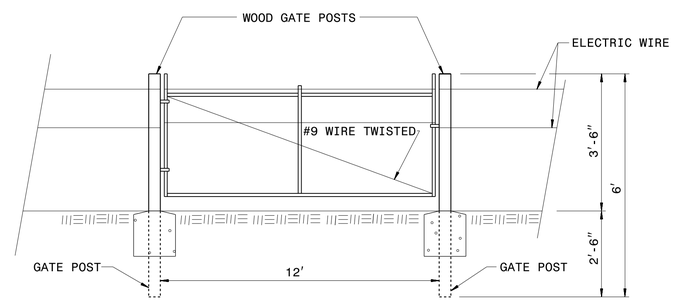

GATE

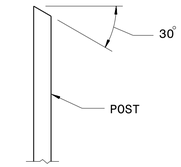

DETAIL SHOWING METHOD OF CUTTING POST TOPS

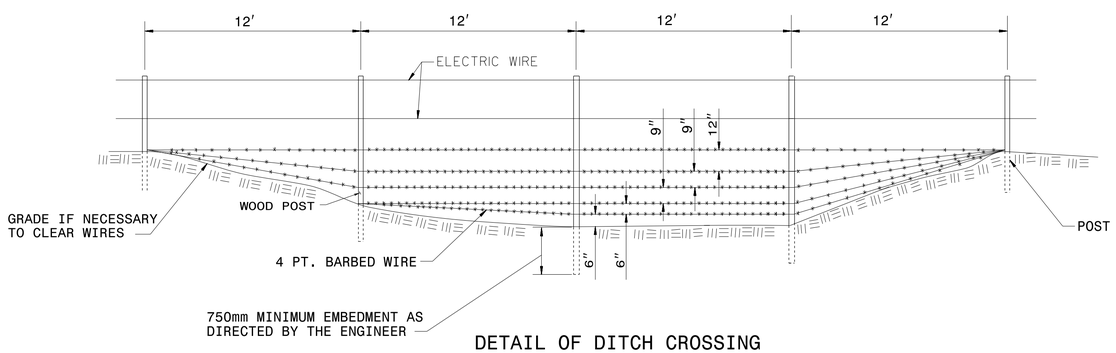

DETAIL OF DITCH CROSSING

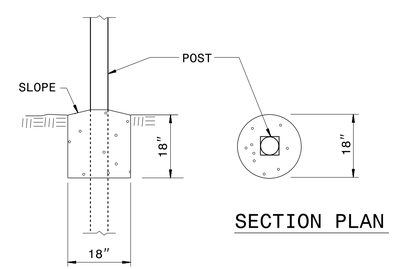

SECTION PLAN

DETAIL OF POST ANCHOR

NORTH CAROLINA PROFESSIONAL SEAL 022966 ENGINEER
Digitally signed by Jay Hammerton
873F3D17DCDC45F...
4/7/2015

CONTRACT STANDARDS & DEVELOPMENT UNIT
STANDARDS AND SPECIAL DESIGN
Office 919-707-6950 FAX 919-250-4119

2 STRAND ELECTRIC WIRE FENCE

ORIGINAL BY: _____ DATE: _____
MODIFIED BY: rnbritt DATE: 10-14-04
CHECKED BY: _____ DATE: _____
FILE SPEC.: details/nbritt/metric/misc/electricfence.dgn