PROJECT REFERENCE NO.	SHEET NO.
5CRJ0911J4,5CR.2091IJ4	3

PAVEMENT SCHEDULE

C1	1½″ ASPHALT CONCRETE SURFACE COURSE, TYPE S9.5B, AT AN AVERAGE RATE OF 168 LBS. PER SQ. YD.
C2	1¼″ ASPHALT CONCRETE SURFACE COURSE, TYPE SF9.5A, AT AN AVERAGE RATE OF 137.5 LBS. PER SQ. YD.
S	PROP. SHOULDER RECONSTRUCTION
U	EXISTING PAVEMENT
V	1½″ MILLING

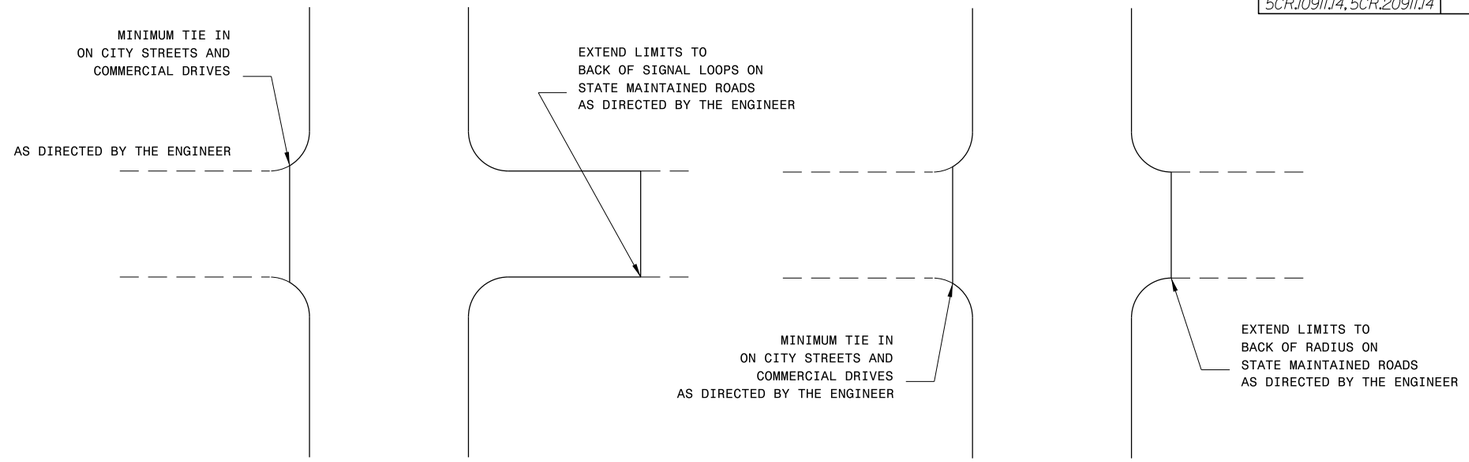

DETAIL OF PROJECT LIMITS AT SIGNALIZED Y LINES

DETAIL OF PROJECT LIMITS AT UNSIGNALIZED Y LINES

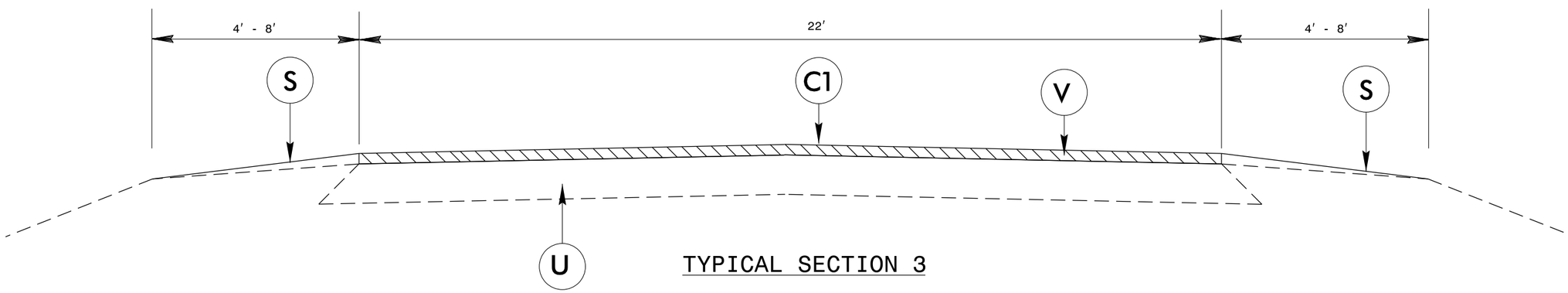

TYPICAL SECTION 3

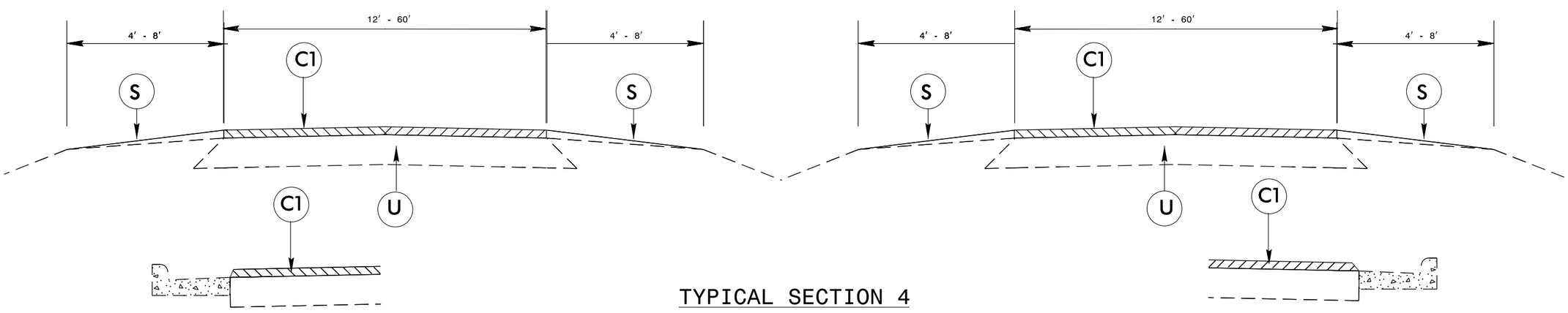

TYPICAL SECTION 4