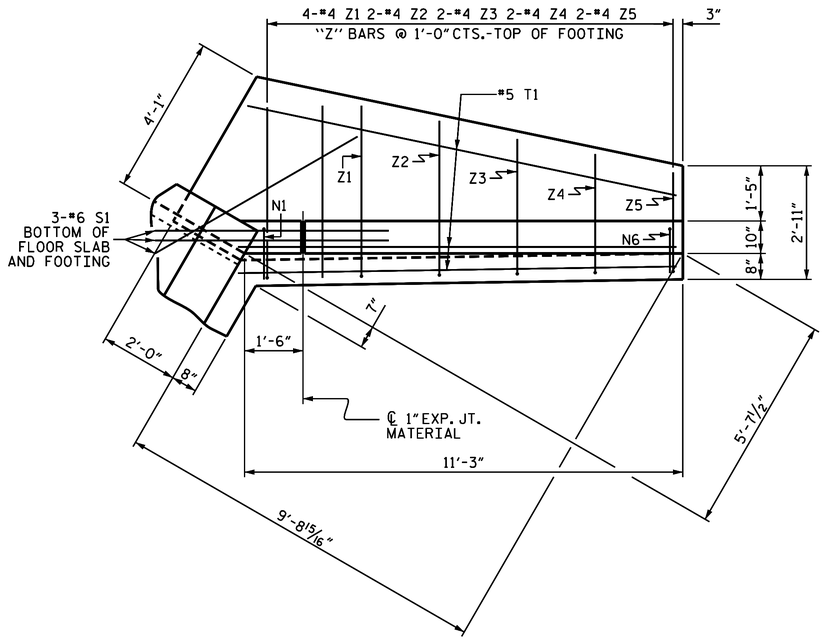

PLAN W1

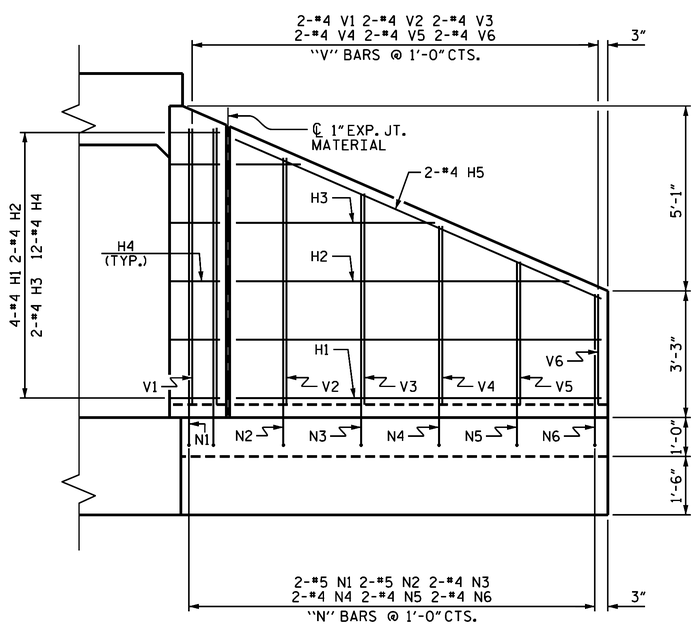

ELEVATION W1

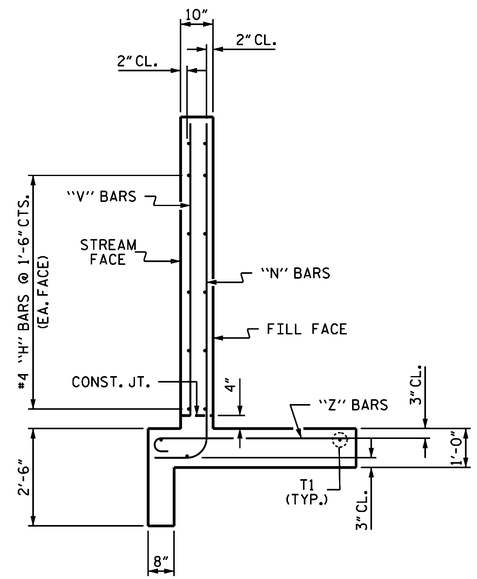

TYPICAL WING SECTION

BAR TYPES

ALL BAR DIMENSIONS ARE OUT TO OUT.

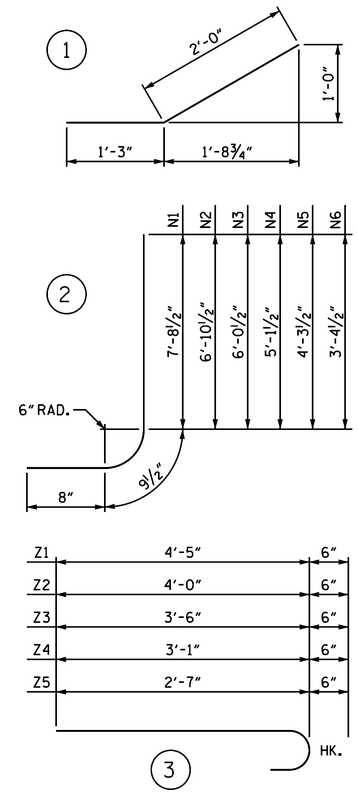

BILL OF MATERIAL (STAGE I)

BAR	NO.	SIZE	TYPE	LENGTH	WEIGHT
H1	4	#4	STR	9'-4"	25
H2	2	#4	STR	8'-6"	11
H3	2	#4	STR	5'-1"	7
H4	12	#4	1	3'-3"	26
H5	2	#4	STR	10'-3"	14
N1	2	#5	2	9'-2"	19
N2	2	#5	2	8'-4"	17
N3	2	#4	2	7'-6"	10
N4	2	#4	2	6'-7"	9
N5	2	#4	2	5'-9"	8
N6	2	#4	2	4'-10"	6
S1	3	#6	STR	6'-0"	27
T1	3	#5	STR	11'-3"	35
V1	2	#4	STR	7'-1"	9
V2	2	#4	STR	6'-4"	8
V3	2	#4	STR	5'-5"	7
V4	2	#4	STR	4'-7"	6
V5	2	#4	STR	3'-8"	5
V6	2	#4	STR	2'-10"	4
Z1	4	#4	3	4'-11"	13
Z2	2	#4	3	4'-6"	6
Z3	2	#4	3	4'-0"	5
Z4	2	#4	3	3'-7"	5
Z5	2	#4	3	3'-1"	4

TOTAL REINFORCING STEEL FOR 1 WING 286 LBS

CLASS A CONCRETE
1 WING 4.3 CY
1 HEADWALL 1.1 CY
1 END CURTAIN WALL 1.3 CY
TOTAL 6.7 CY

PROJECT NO. B-5124
NASH COUNTY
STATION: 17+17.80 -L-

SHEET 8 OF 10

STATE OF NORTH CAROLINA
DEPARTMENT OF TRANSPORTATION
RALEIGH

WING FOR STAGE I CONCRETE BOX CULVERT

H = 7'-0"
90° SKEW

NORTH CAROLINA PROFESSIONAL SEAL 14045 ENGINEER TIMOTHY L. COGGINS
3/9/2015
DocuSigned by: Tim Coggins
DEFD4A8D48FA47B...

REVISIONS							
NO.	BY:	DATE:	NO.	BY:	DATE:	SHEET NO.	C-8
1			3			TOTAL SHEETS	20
2			4				

ASSEMBLED BY : G. KOUCHEKI DATE : 12/30/14
CHECKED BY : A. K. PASCHAL DATE : 01/09/15
DRAWN BY : CCJ 10/99
CHECKED BY : RWW 03/00

STR. #4

STD. NO. CW9007