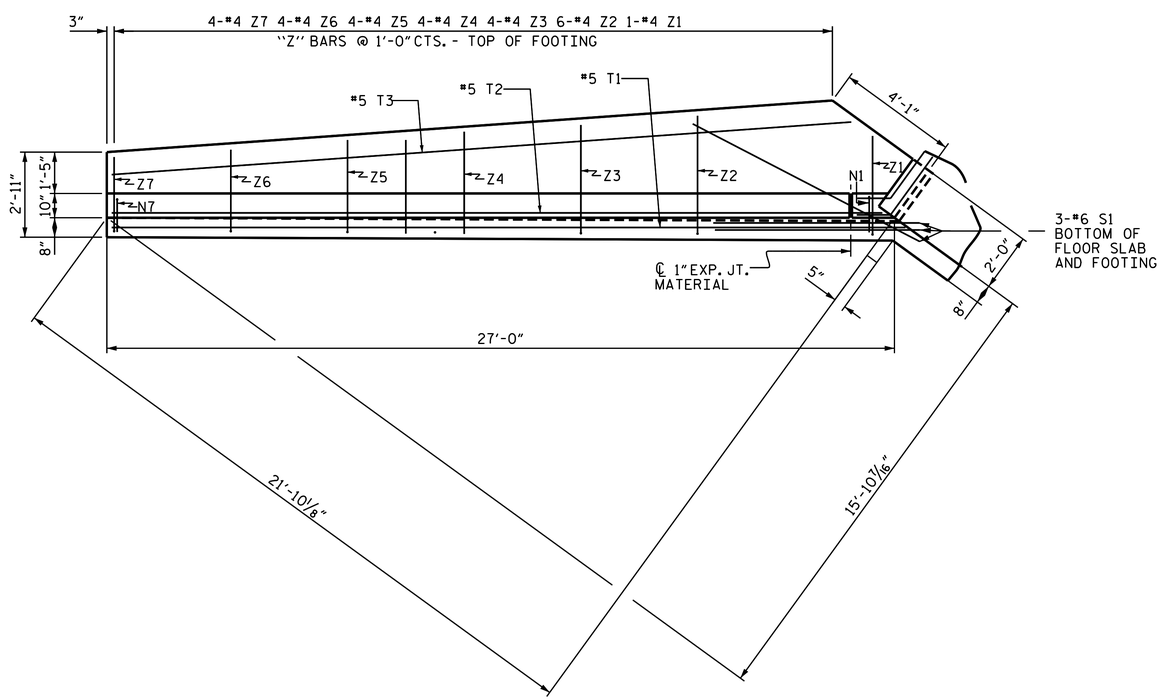

PLAN - W2

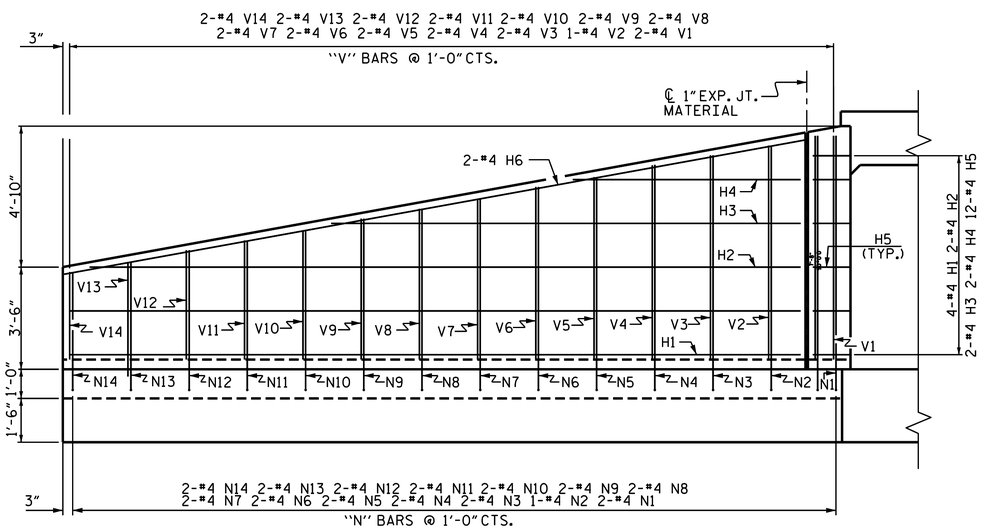

ELEVATION - W2

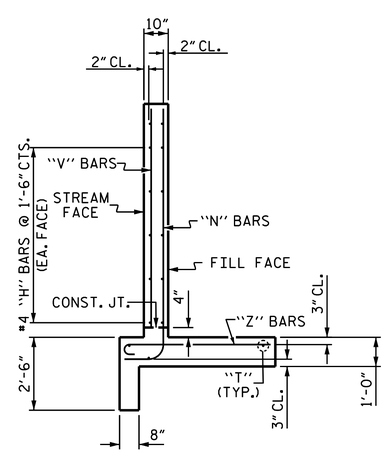

BAR TYPES

ALL BAR DIMENSIONS ARE OUT TO OUT.

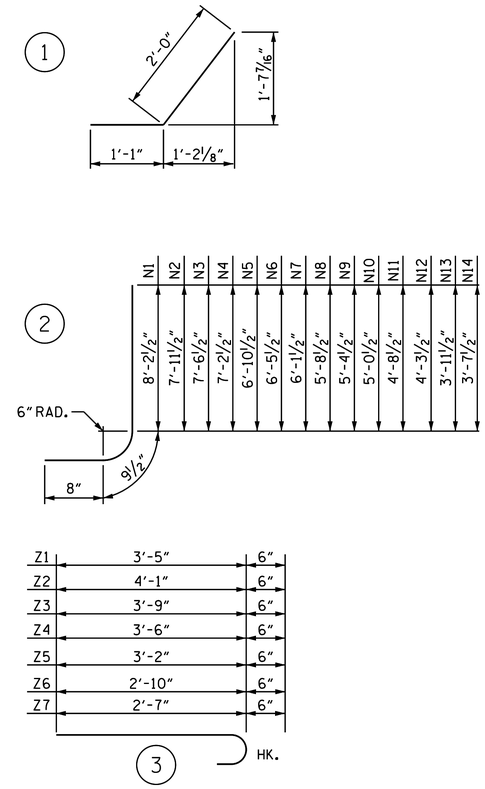

BILL OF MATERIAL (STAGE II)

BAR	NO.	SIZE	TYPE	LENGTH	WEIGHT
H1	4	#4	STR	25'-1"	67
H2	2	#4	STR	24'-4"	33
H3	2	#4	STR	16'-1"	21
H4	2	#4	STR	7'-9"	10
H5	12	#4	1	3'-3"	26
H6	2	#4	STR	25'-6"	34
N1	2	#5	2	9'-8"	20
N2	1	#5	2	9'-5"	10
N3	2	#4	2	9'-0"	12
N4	2	#4	2	8'-8"	12
N5	2	#4	2	8'-4"	11
N6	2	#4	2	7'-11"	11
N7	2	#4	2	7'-7"	10
N8	2	#4	2	7'-2"	10
N9	2	#4	2	6'-10"	9
N10	2	#4	2	6'-6"	9
N11	2	#4	2	6'-2"	8
N12	2	#4	2	5'-9"	8
N13	2	#4	2	5'-5"	7
N14	2	#4	2	5'-1"	7
S1	3	#6	STR	7'-0"	32
T1	1	#5	STR	27'-2"	28
T2	1	#5	STR	26'-5"	28
T3	1	#5	STR	25'-5"	27
V1	2	#4	STR	7'-8"	10
V2	1	#4	STR	7'-4"	5
V3	2	#4	STR	7'-0"	9
V4	2	#4	STR	6'-8"	9
V5	2	#4	STR	6'-3"	8
V6	2	#4	STR	5'-11"	8
V7	2	#4	STR	5'-6"	7
V8	2	#4	STR	5'-2"	7
V9	2	#4	STR	4'-10"	6
V10	2	#4	STR	4'-5"	6
V11	2	#4	STR	4'-1"	5
V12	2	#4	STR	3'-9"	5
V13	2	#4	STR	3'-4"	4
V14	2	#4	STR	3'-0"	4

BAR	NO.	SIZE	TYPE	LENGTH	WEIGHT
Z1	1	#4	3	3'-11"	3
Z2	6	#4	3	4'-7"	18
Z3	4	#4	3	4'-3"	11
Z4	4	#4	3	4'-0"	11
Z5	4	#4	3	3'-8"	10
Z6	4	#4	3	3'-4"	9
Z7	4	#4	3	3'-1"	8

REINFORCING STEEL FOR 1 WING 613 LBS

CLASS A CONCRETE
1 WING 9.9 CY
1 HEADWALL 0.9 CY
1 END CURTAIN WALL 1.2 CY
TOTAL 12.0 CY

PROJECT NO. B-5124
NASH COUNTY
STATION: 17+17.80 -L-

SHEET 9 OF 10

STATE OF NORTH CAROLINA
DEPARTMENT OF TRANSPORTATION
RALEIGH

# WING FOR STAGE II CONCRETE BOX CULVERT
H = 7'-0"

NORTH CAROLINA PROFESSIONAL SEAL 14045 ENGINEER TIMOTHY L. COGGINS
3/9/2015
DocuSigned by: Tim Coggins
DEFD4A8D48FA4TB...

REVISIONS						
NO.	BY:	DATE:	NO.	BY:	DATE:	
1			3			
2			4			

SHEET NO. C-9
TOTAL SHEETS 20

STR. #4

DRAWN BY : REZA KOUCHEKI DATE : 01/13/15
CHECKED BY : K.P.SEDAI DATE : 01/13/15
DESIGN ENGINEER OF RECORD: REZA KOUCHEKI DATE : 01/13/15