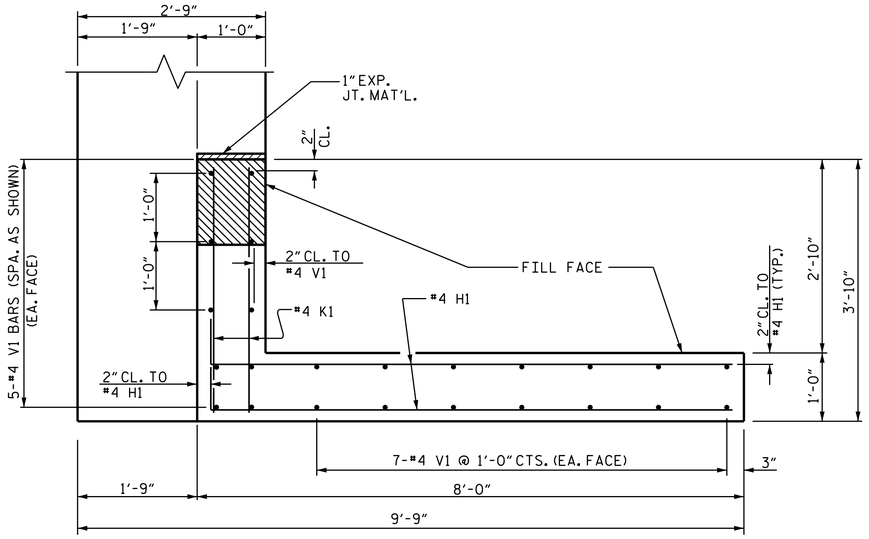

PLAN OF WING (W1)

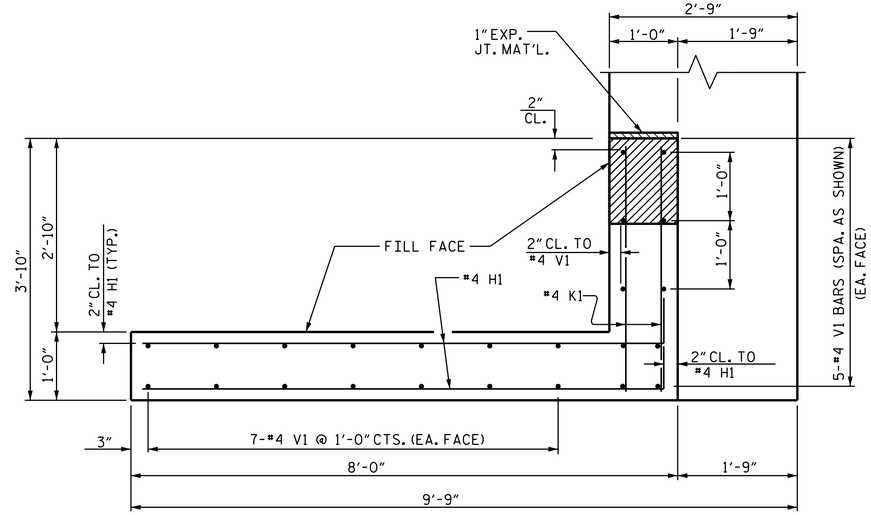

PLAN OF WING (W2)

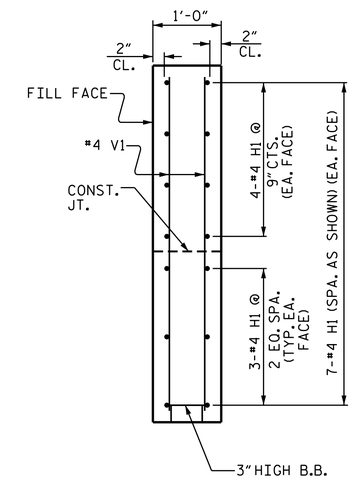

SECTION X-X

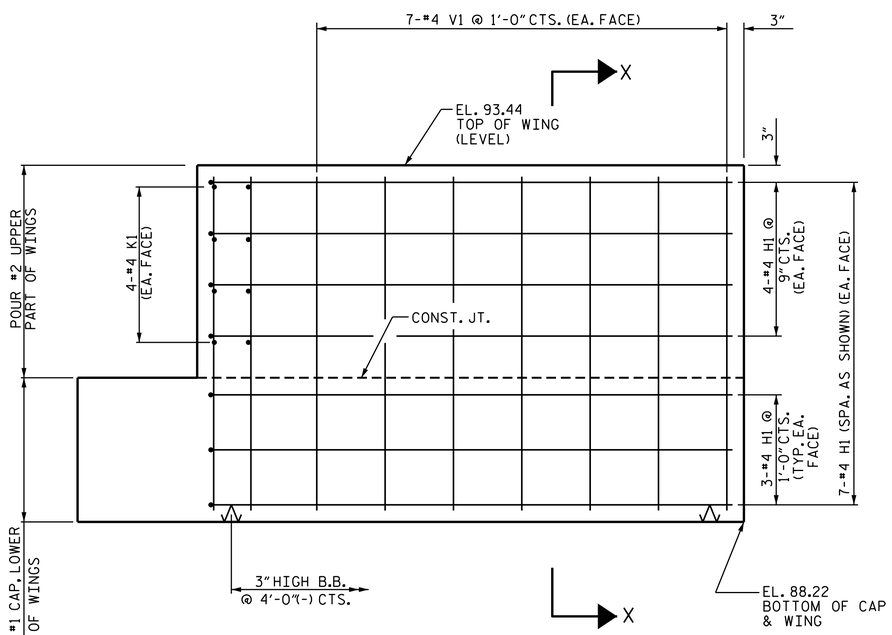

ELEVATION OF WING (W1)

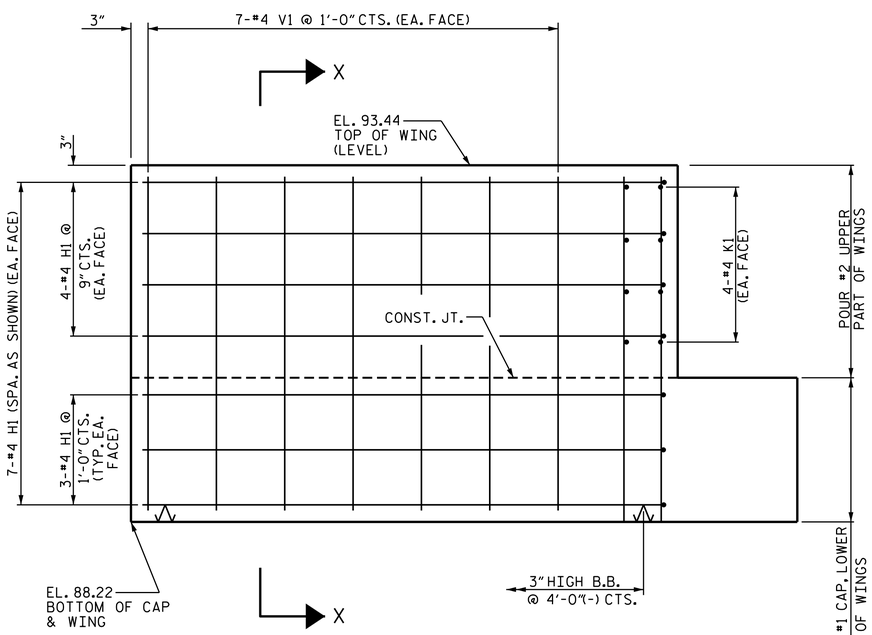

ELEVATION OF WING (W2)

PROJECT NO. B-5124

NASH COUNTY

STATION: 36+88.50 -L-

SHEET 2 OF 3

STATE OF NORTH CAROLINA
DEPARTMENT OF TRANSPORTATION
RALEIGH

SUBSTRUCTURE

END BENT No. 1

NORTH CAROLINA PROFESSIONAL SEAL 14045 ENGINEER TIMOTHY L. COGGINS
3/9/2015

DocuSigned by: Tim Coggins
DEFDA85D48F4A7B...

REVISIONS							SHEET NO.
NO.	BY:	DATE:	NO.	BY:	DATE:		S-35
1			3				TOTAL SHEETS
2			4				71

STR. #2

DRAWN BY : M.D.PISO DATE : 04-21-14
CHECKED BY : T.L. COGGINS, P.E. DATE : 10-06-14
DESIGN ENGINEER OF RECORD: K.D.SEDAI,P.E. DATE : 11-27-13

09-MAR-2015 07:55
R:\Structures\FinalPlans\DocuSign Setup\402_005_B-5124_SMU_S2-0.dgn
nruffin