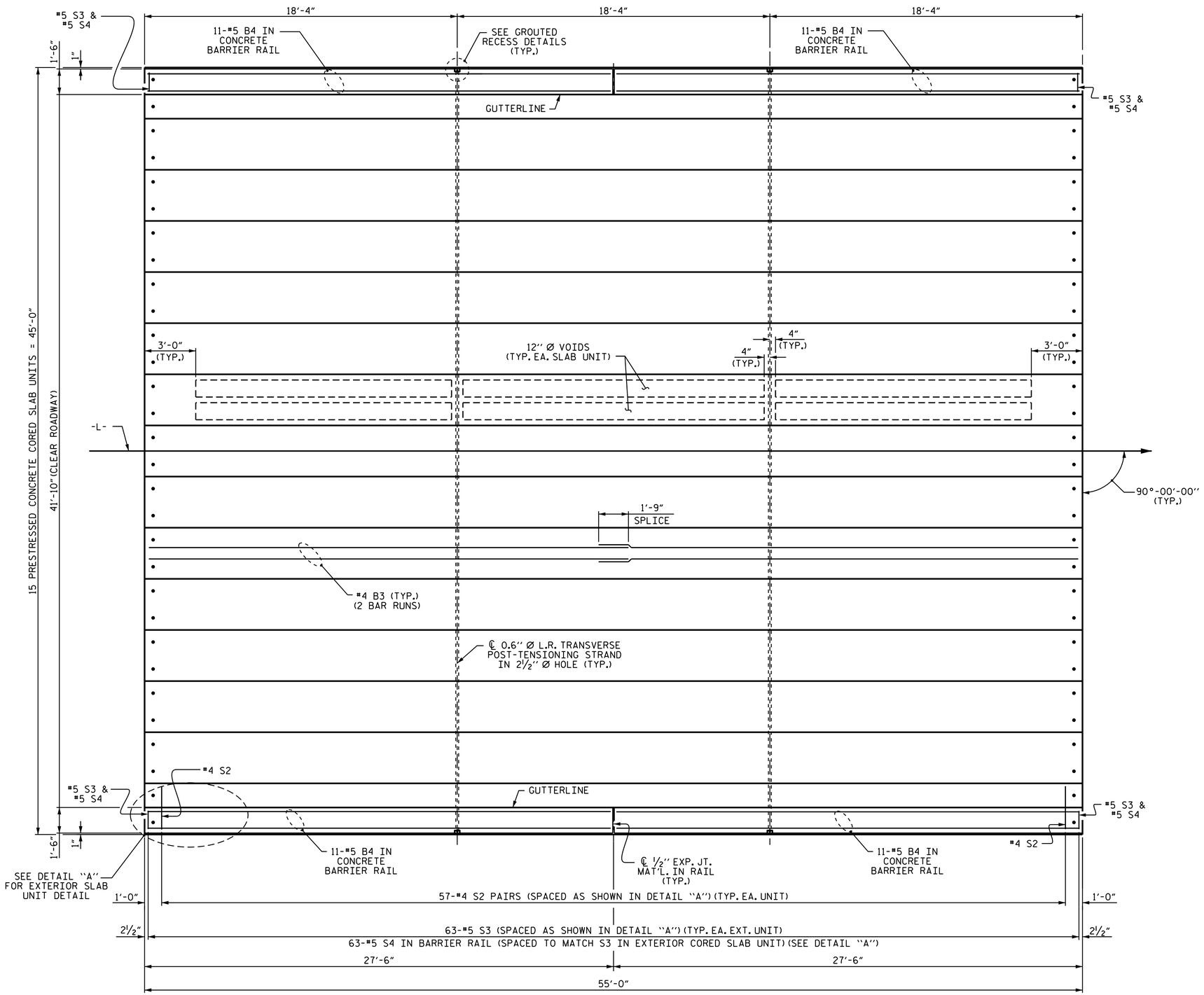

PLAN OF SPAN B

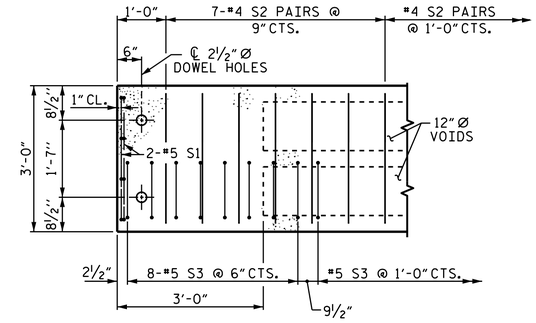

DETAIL "A"

NOTE: EXTERIOR UNIT SHOWN - INTERIOR UNIT SIMILAR EXCEPT OMIT #5 S3 BARS.

PROJECT NO. B-5124

NASH COUNTY

STATION: 36+88.50 -L-

SHEET 3 OF 6

STATE OF NORTH CAROLINA
DEPARTMENT OF TRANSPORTATION
RALEIGH

SUPERSTRUCTURE

PLAN OF 55' UNIT
41'-10" CLEAR ROADWAY
90° SKEW
SPAN B

NORTH CAROLINA PROFESSIONAL SEAL 14045 ENGINEER TIMOTHY L. COGGINS
3/9/2015

DocuSigned by: Tim Coggins
DEFD4A8D48FA47B...

REVISIONS						SHEET NO.
NO.	BY:	DATE:	NO.	BY:	DATE:	S-29
1			3			TOTAL SHEETS
2			4			71

DRAWN BY :	GHOLAMREZA KOUCHEKI	DATE :	2/17/14
CHECKED BY :	D.G. ELY	DATE :	2/19/14
DESIGN ENGINEER OF RECORD:	K.P.SEDAI	DATE :	11/17/14

09-MAR-2015 07:55
R:\Structures\FinalPlans\DocuSign Setup\402_005_B-5124_SMU_S2-0.dgn
nruffin

STR. #2