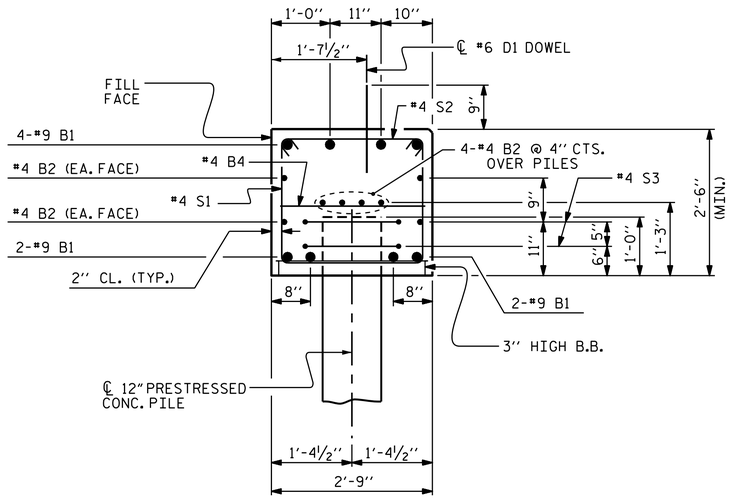

SECTION A-A

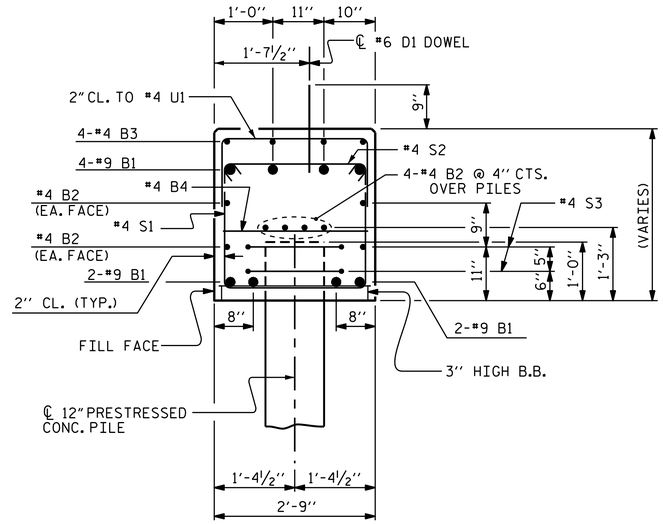

SECTION B-B

BAR TYPES

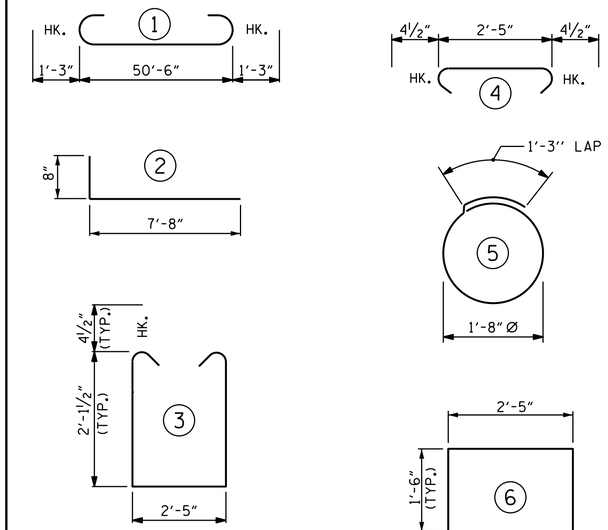

ALL BAR DIMENSIONS ARE OUT TO OUT.

END BENT No. 1
12" PRESTRESSED CONCRETE PILES
NO: 6 LIN. FT.= 240

PILE REDRIVES EA. 3

BILL OF MATERIAL
END BENT No. 1

BAR	NO.	SIZE	TYPE	LENGTH	WEIGHT
B1	8	#9	1	53'-0"	1,442
B2	16	#4	STR	26'-7"	284
B3	4	#4	STR	30'-0"	80
B4	13	#4	STR	2'-5"	21
D1	30	#6	STR	1'-6"	68
H1	28	#4	2	8'-4"	156
K1	16	#4	STR	3'-6"	37
S1	62	#4	3	7'-5"	307
S2	62	#4	4	3'-2"	131
S3	12	#4	5	6'-6"	52
U1	21	#4	6	5'-5"	76
V1	48	#4	STR	4'-10"	155
REINFORCING STEEL					2,809 LBS.

CLASS A CONCRETE BREAKDOWN

POUR #1	CAP, LOWER PART OF WINGS	▲15.3 C.Y.
POUR #2	UPPER PART OF WINGS	2.2 C.Y.
TOTAL CLASS A CONCRETE		17.5 C.Y.

▲ CONCRETE DISPLACED BY THE 12" PRESTRESSED CONCRETE PILES HAS BEEN DEDUCTED FROM THE CLASS A CONCRETE QUANITY.

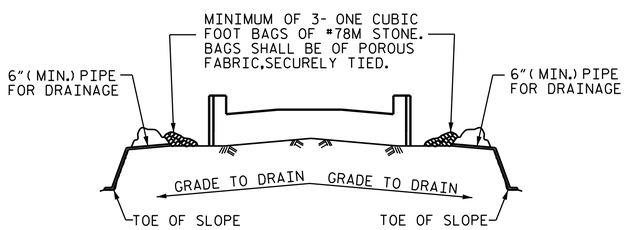

BAGGED STONE AND PIPE SHALL BE PLACED IMMEDIATELY AFTER COMPLETION OF END BENT EXCAVATION. PIPE MAY BE EITHER CONCRETE, CORRUGATED STEEL, CORRUGATED ALUMINUM ALLOY, OR CORRUGATED PLASTIC. PERFORATED PIPE WILL NOT BE ALLOWED.

BAGGED STONE SHALL REMAIN IN PLACE UNTIL THE ENGINEER DIRECTS THAT IT BE REMOVED. THE CONTRACTOR SHALL REMOVE AND DISPOSE OF SILT ACCUMULATIONS AT BAGGED STONE WHEN SO DIRECTED BY THE ENGINEER. BAGS SHALL BE REMOVED AND REPLACED WHENEVER THE ENGINEER DETERMINES THAT THEY HAVE DETERIORATED AND LOST THEIR EFFECTIVENESS.

NO SEPARATE PAYMENT WILL BE MADE FOR THIS WORK AND THE ENTIRE COST OF THIS WORK SHALL BE INCLUDED IN THE UNIT CONTRACT PRICE BID FOR THE SEVERAL PAY ITEMS.

TEMPORARY DRAINAGE AT END BENT

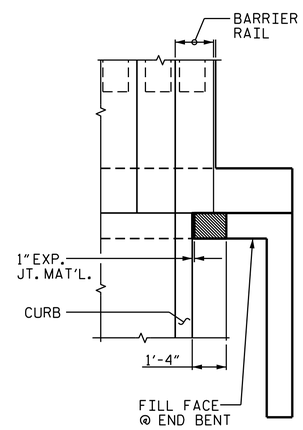

PLAN

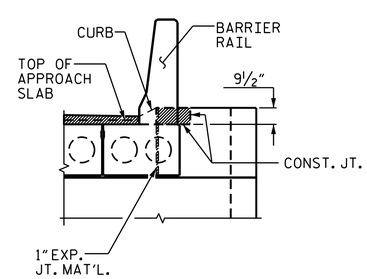

ELEVATION

BLOCKOUT IN WING WALL FOR CORED SLAB

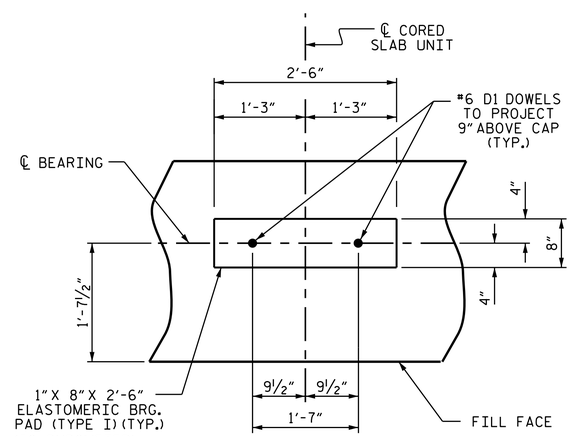

DETAIL "A"

PROJECT NO. B-5124
NASH COUNTY
STATION: 36+88.50 -L-

SHEET 3 OF 3

STATE OF NORTH CAROLINA
DEPARTMENT OF TRANSPORTATION
RALEIGH

SUBSTRUCTURE

END BENT No. 1
DETAILS

NORTH CAROLINA PROFESSIONAL SEAL 14045 ENGINEER TIMOTHY L. COGGINS
3/9/2015
DocuSigned by: Tim Coggins
DEFD4A8D48FA47B...

REVISIONS						SHEET NO.
NO.	BY:	DATE:	NO.	BY:	DATE:	S-36
1			3			TOTAL SHEETS
2			4			71

STR. #2

ASSEMBLED BY : M.D.PISO DATE : 04-21-14
CHECKED BY : T.L. COGGINS, P.E. DATE : 10-06-14
DRAWN BY : DGE 02/10
CHECKED BY : MKT 02/10

09-MAR-2015 07:55
R:\Structures\Final Plans\DocuSign Setup\402_005_B-5124_SMU_S2-0.dgn
nruffin