NOTES

STIRRUPS IN CAP MAY BE SHIFTED AS NECESSARY TO CLEAR DOWELS.

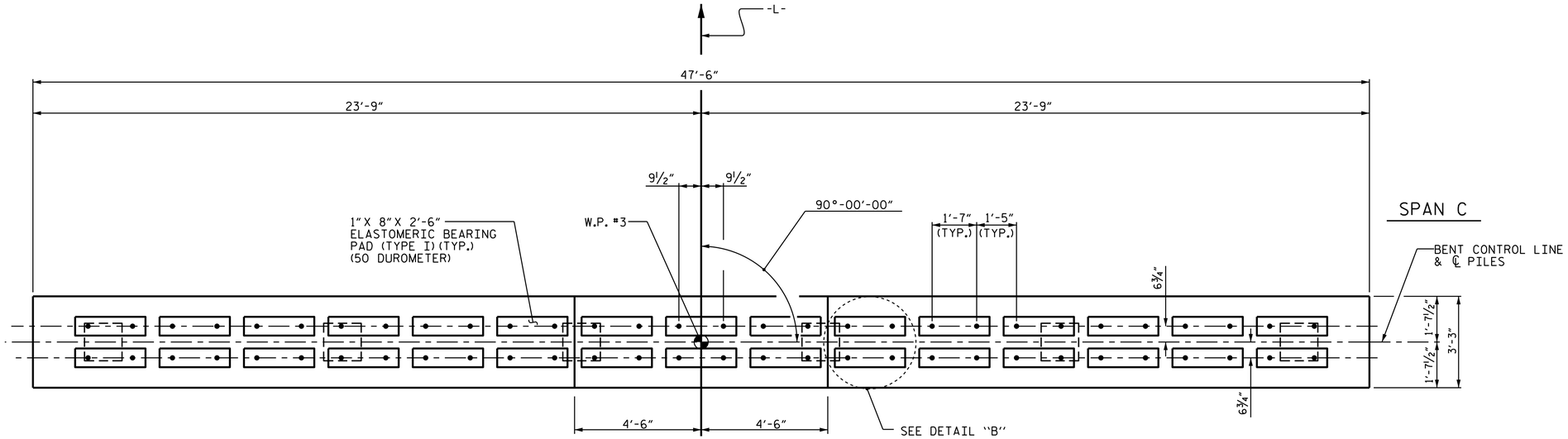

PLAN

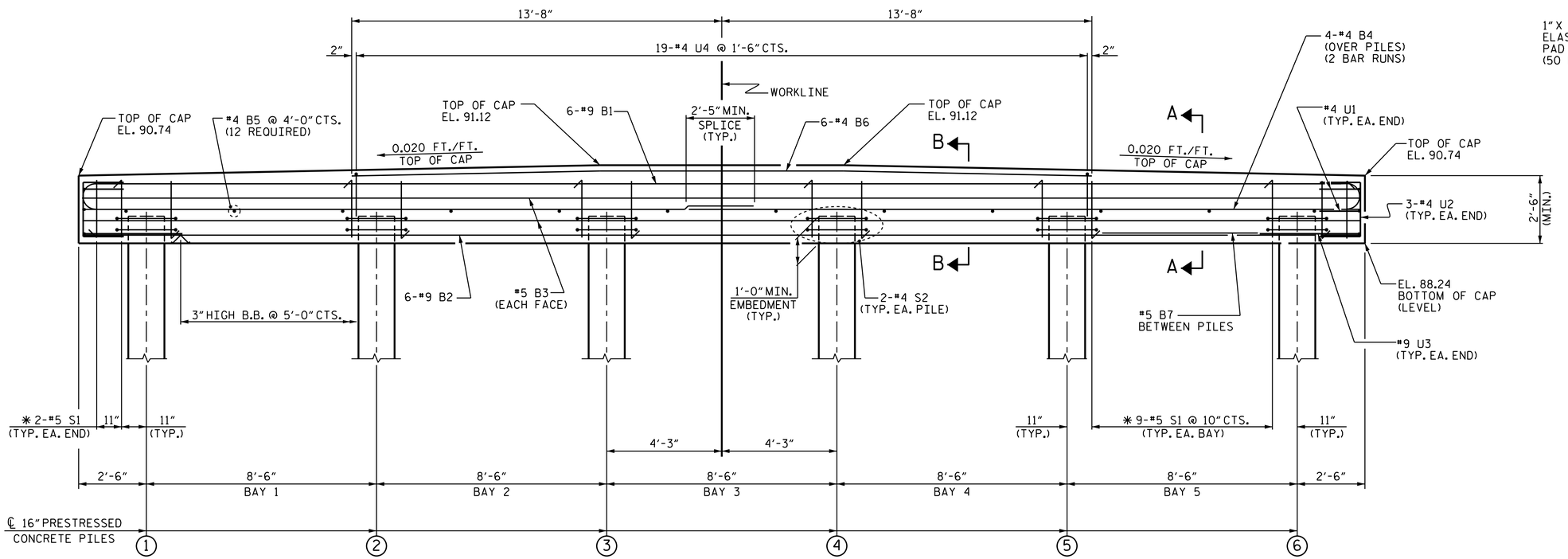

ELEVATION

✳ INVERT ALTERNATE STIRRUPS

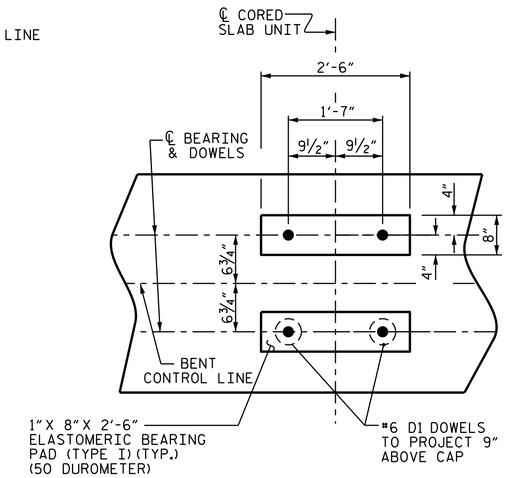

DETAIL "B"

(DIMENSIONS ARE TYPICAL EACH BEARING)

PROJECT NO. B-5124

NASH COUNTY

STATION: 36+88.50 -L-

SHEET 2 OF 3

STATE OF NORTH CAROLINA
DEPARTMENT OF TRANSPORTATION
RALEIGH

SUBSTRUCTURE

BENT No. 2

NORTH CAROLINA PROFESSIONAL SEAL 14045 ENGINEER TIMOTHY L. COGGINS
3/9/2015

DocuSigned by: Tim Coggins
DEFD4A8D48FA47B...

REVISIONS								SHEET NO.
NO.	BY:	DATE:	NO.	BY:	DATE:			S-38
1			3					TOTAL SHEETS
2			4					71

STR. #2

DRAWN BY : M.D.PISO DATE : 06-04-14
CHECKED BY : T.L. COGGINS, P.E. DATE : 10-05-14
DESIGN ENGINEER OF RECORD: K.D.SEDAI,P.E. DATE : 11-27-13

09-MAR-2015 07:55
R:\Structures\Final Plans\DocuSign Setup\402_005_B-5124_SMU_S2-0.dgn
druffin