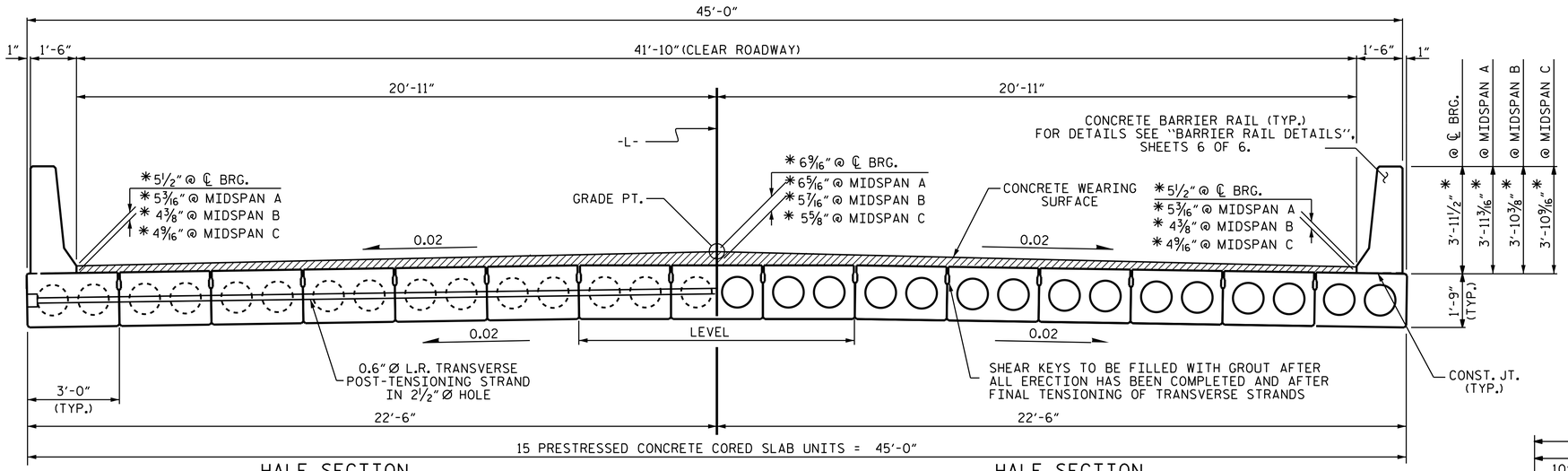

HALF SECTION
AT INTERMEDIATE DIAPHRAGMS

HALF SECTION
THROUGH VOIDS

TYPICAL SECTION

* THE MINIMUM AND MAXIMUM BARRIER RAIL HEIGHTS AND CONCRETE WEARING SURFACE THICKNESSES ARE SHOWN. THE HEIGHT OF THE BARRIER RAIL AND CONCRETE WEARING SURFACE THICKNESS VARIES WHILE THE TOP OF THE BARRIER RAIL FOLLOWS THE PROFILE OF THE GUTTERLINE.

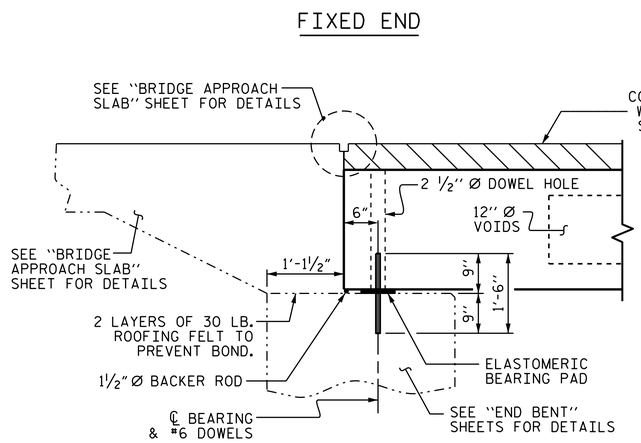

SECTION AT END BENT

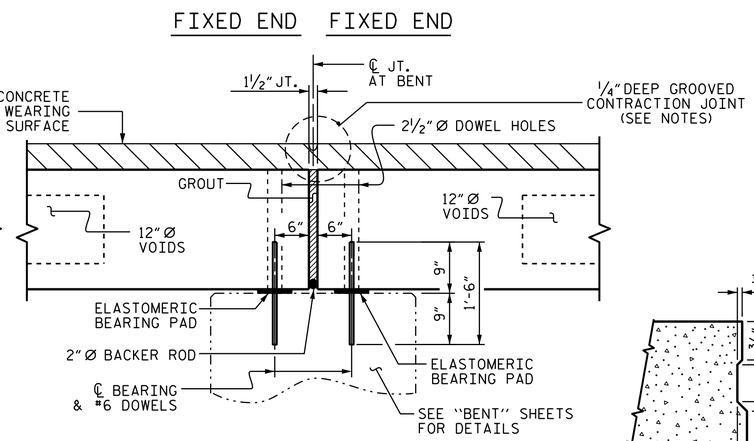

SECTION AT BENT

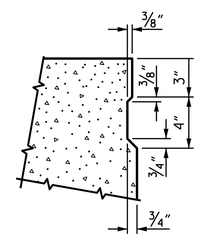

SHEAR KEY DETAIL

NOTE: OMIT SHEAR KEY ON OUTSIDE FACE OF EXTERIOR CORED SLABS.

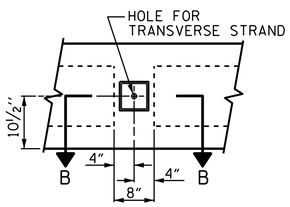

ELEVATION VIEW

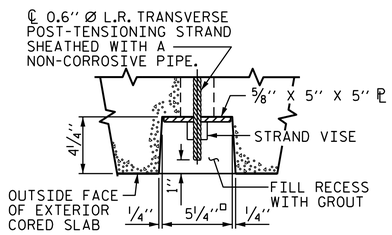

SECTION B-B

GROUTED RECESS AT END OF POST-TENSIONED STRAND OF CORED SLABS

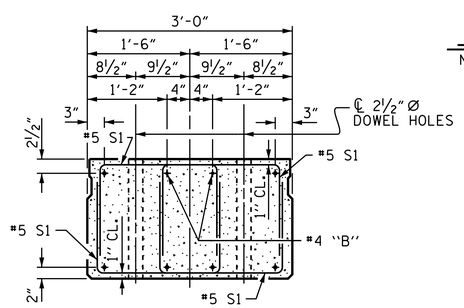

END ELEVATION

SHOWING PLACEMENT OF DOUBLE STIRRUPS AND LOCATION OF DOWEL HOLES. (STRAND LAYOUT NOT SHOWN.) INTERIOR SLAB UNIT SHOWN-EXTERIOR SLAB UNIT SIMILAR EXCEPT SHEAR KEY LOCATION.

PERMITTED THREADED INSERT CAST IN OUTSIDE FACE OF EXTERIOR UNIT AND RECESSED ⅜" SIZE TO BE DETERMINED BY CONTRACTOR.

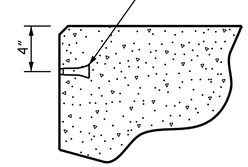

THREADED INSERT DETAIL

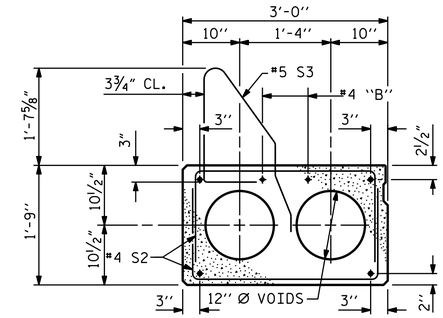

EXTERIOR SLAB
(FOR PRESTRESSED STRAND LAYOUT, SEE INTERIOR SLAB SECTION.)

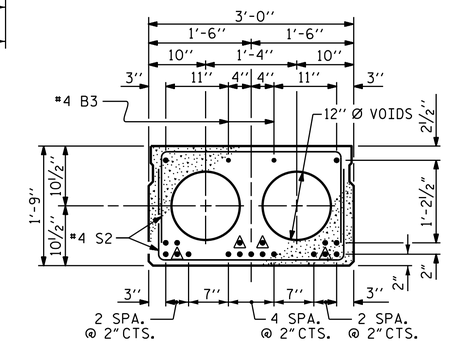

INTERIOR SLAB SECTION
55' UNIT
SPAN B
(19 STRANDS REQUIRED)

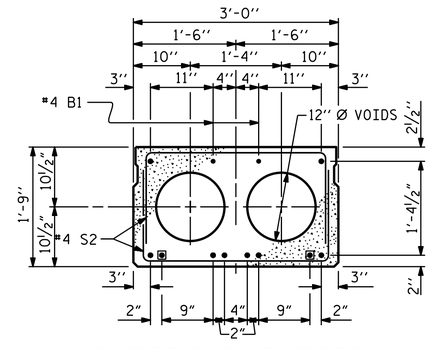

INTERIOR SLAB SECTION
35' UNIT
SPAN A
(10 STRANDS REQUIRED)

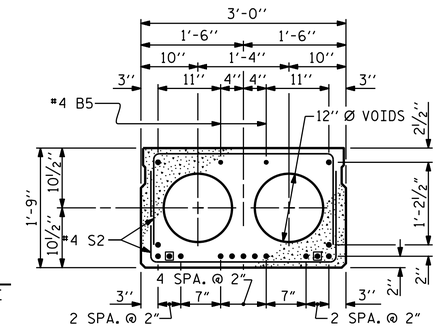

INTERIOR SLAB SECTION
45' UNIT
SPAN C
(15 STRANDS REQUIRED)

0.6" Ø LOW RELAXATION STRAND LAYOUT

▲ BOND SHALL BE BROKEN ON THESE STRANDS FOR A DISTANCE OF 6'-0" FROM END OF CORED SLAB UNIT. SEE STANDARD SPECIFICATIONS, ARTICLE 1078-7.

◉ BOND SHALL BE BROKEN ON THESE STRANDS FOR DISTANCE OF 2'-0" FROM END OF CORED SLAB UNIT. SEE STANDARD SPECIFICATIONS, ARTICLE 1078-7.

DEBONDING LEGEND

PROJECT NO. B-5124
NASH COUNTY
STATION: 36+88.50 -L-

SHEET 1 OF 6

STATE OF NORTH CAROLINA
DEPARTMENT OF TRANSPORTATION
RALEIGH

SUPERSTRUCTURE
3'-0" X 1'-9"
PRESTRESSED CONCRETE CORED SLAB UNIT
90° SKEW

NORTH CAROLINA PROFESSIONAL SEAL 14045 ENGINEER TIMOTHY L. COGGINS
3/9/2015
DocuSigned by: Tim Coggins
DEFD4A8D48FA47B...

REVISIONS								SHEET NO.
NO.	BY:	DATE:	NO.	BY:	DATE:			S-27
1			3					TOTAL SHEETS
2			4					71

DRAWN BY :	REZA KOUCHEKI	DATE :	2/21/14
CHECKED BY :	D.G. ELY	DATE :	2/19/14
DESIGN ENGINEER OF RECORD:	K.P.SEDAI	DATE :	11/17/14

09-MAR-2015 07:54
R:\Structures\FinalPlans\DocuSign Setup\402_005_B-5124_SMU_S2-0.dgn
pruffin

STR. #2