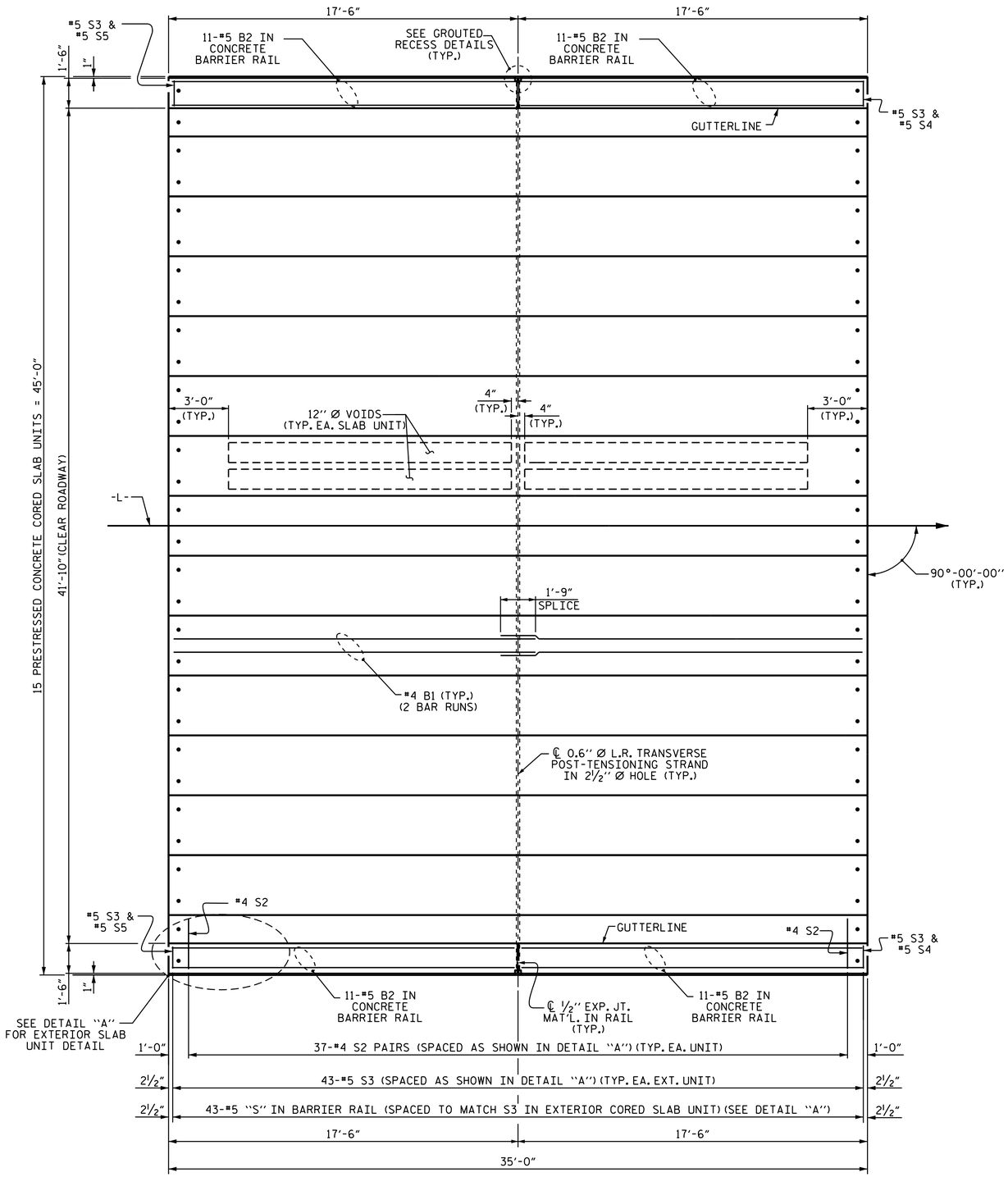

PLAN OF SPAN A

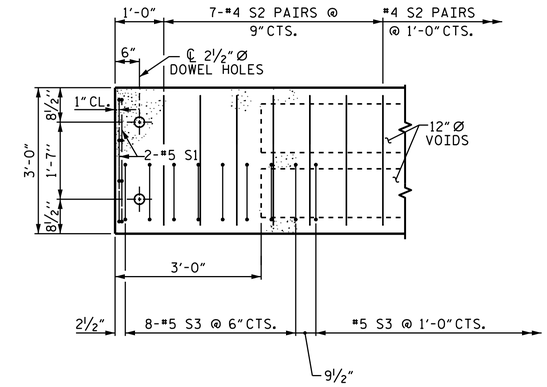

DETAIL "A"

NOTE: EXTERIOR UNIT SHOWN - INTERIOR UNIT SIMILAR EXCEPT OMIT #5 S3 BARS.

AT TAPERED END OF BARRIER RAIL, USE #5 S5 BARS SPACED TO MATCH #5 S3; SEE "END OF RAIL DETAILS" SHEET 6 OF 6. FOR NON-TAPERED PORTION, USE #5 S4 BARS SPACED TO MATCH #5 S3.

PROJECT NO. B-5124
NASH COUNTY
STATION: 36+88.50 -L-

SHEET 2 OF 6

STATE OF NORTH CAROLINA
DEPARTMENT OF TRANSPORTATION
RALEIGH

SUPERSTRUCTURE

PLAN OF 35' UNIT
41'-10" CLEAR ROADWAY
90° SKEW
SPAN A

NORTH CAROLINA PROFESSIONAL SEAL 14045 ENGINEER TIMOTHY L. COGGINS
3/9/2015
DocuSigned by: Tim Coggins
DEFD4A8D48FA47B...

REVISIONS						SHEET NO.
NO.	BY:	DATE:	NO.	BY:	DATE:	S-28
1			3			TOTAL SHEETS
2			4			71

DRAWN BY : GHOLAMREZA KOUCHEKI DATE : 2/20/14
CHECKED BY : D. G. ELY DATE : 2/20/14
DESIGN ENGINEER OF RECORD: K.P.SEDAI DATE : 11/17/14

09-MAR-2015 07:55
R:\Structures\FinalPlans\DocuSign Setup\402_005_B-5124_SMU_S2-0.dgn
pruffin

STR. #2