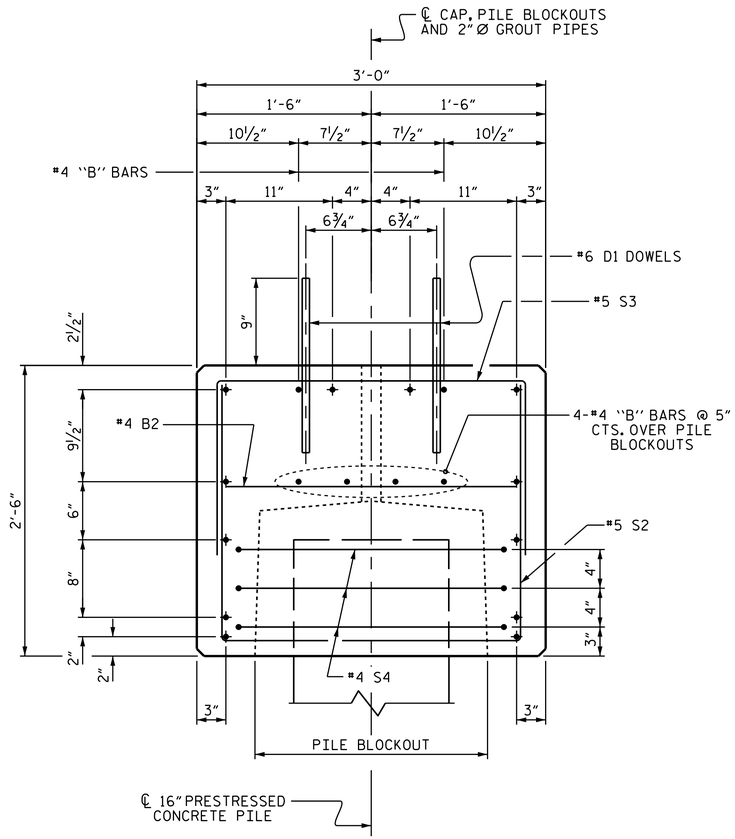

SECTION A-A

(SHOWING 0.6"Ø LOW RELAXATION STRAND LAYOUT)
(12 STRANDS)

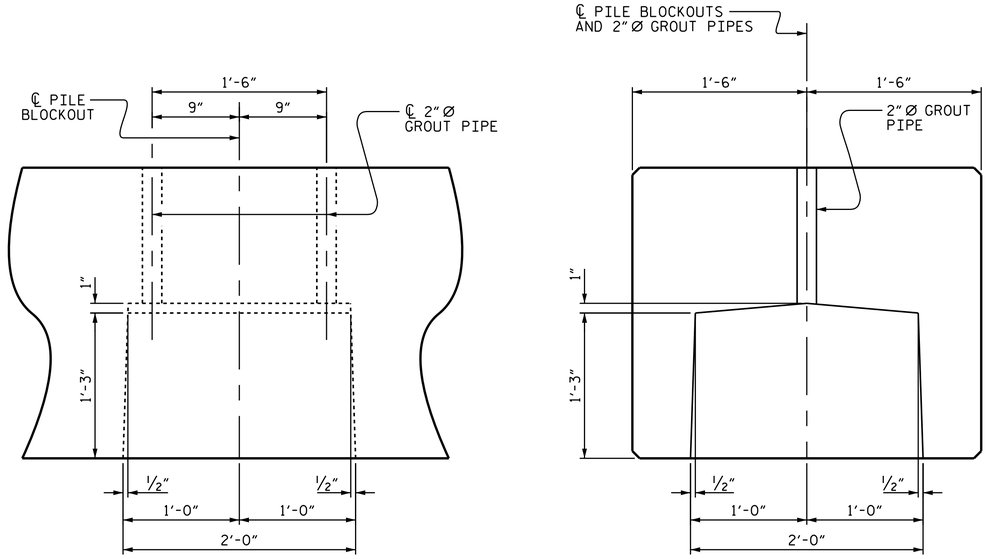

ELEVATION

SECTION

PILE BLOCKOUT DETAILS

(DIMENSIONS ARE TYPICAL EACH BLOCKOUT)

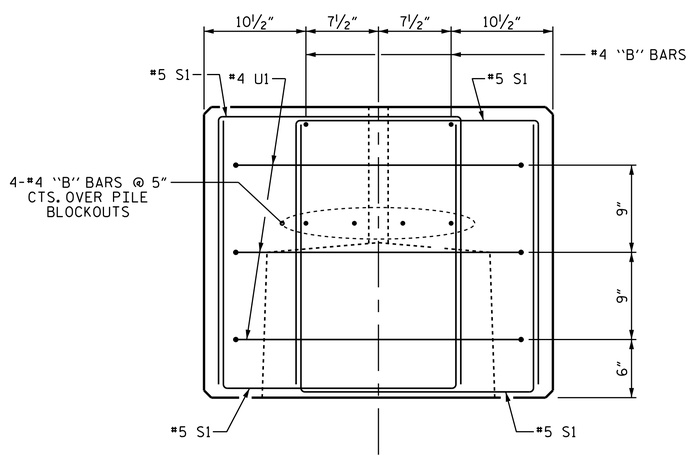

END OF CAP VIEW

(TYPICAL BOTH ENDS)

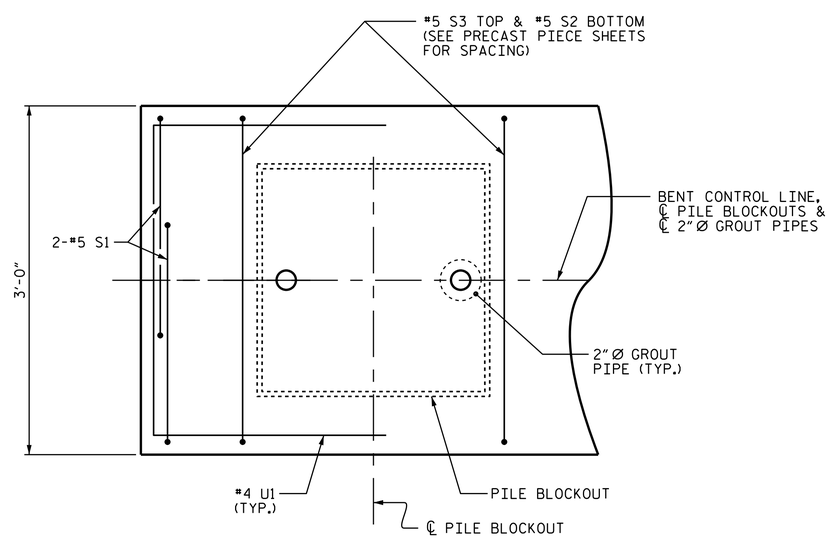

PART PLAN-END OF CAP

(TYPICAL BOTH ENDS)

NOTES

STIRRUPS IN PRECAST PIECES MAY BE SHIFTED AS NECESSARY TO CLEAR DOWELS AND GROUT PIPES.

ALL PRESTRESSING STRANDS SHALL BE 7-WIRE LOW RELAXATION GRADE 270 STRANDS AND SHALL CONFORM TO AASHTO M203 EXCEPT FOR SAMPLING REQUIREMENTS WHICH SHALL BE IN ACCORDANCE WITH THE STANDARD SPECIFICATIONS.

ALL REINFORCING STEEL CAST WITH THE BENT CAP SHALL BE GRADE 60 AND SHALL BE INCLUDED IN THE UNIT PRICE BID FOR PRECAST BENT CAPS.

WHEN BENT CAPS ARE CAST, A HOLD-DOWN SYSTEM SHALL BE EMPLOYED TO PREVENT VOIDS FROM RISING OR MOVING SIDEWAYS. AT LEAST SIX WEEKS PRIOR TO CASTING BENT CAPS, THE CONTRACTOR SHALL SUBMIT TO THE ENGINEER FOR REVIEW AND COMMENT, DETAILED DRAWINGS OF THE PROPOSED HOLD-DOWN SYSTEM. IN ADDITION TO STRUCTURAL DETAILS, LOCATION AND SPACING OF THE HOLD-DOWNS SHALL BE INDICATED.

PRESTRESSING STRANDS SHALL BE CUT FLUSH WITH THE ENDS OF THE BENT CAP SEGMENTS.

APPLY EPOXY PROTECTIVE COATING TO THE ENDS OF THE BENT CAP SEGMENTS.

THE TRANSFER OF LOAD FROM THE ANCHORAGES TO THE BENT CAPS SHALL BE DONE WHEN THE CONCRETE HAS REACHED A COMPRESSIVE STRENGTH OF NOT LESS THAN 3000 PSI.

THE CONTRACTOR SHALL SUBMIT TO THE ENGINEER FOR APPROVAL A METHOD TO LIFT AND SUPPORT THE PRECAST CAP PIECES IN THE PROPER LOCATION AND ELEVATION AS SHOWN ON THE PLANS PRIOR TO PLACEMENT AND CURING OF THE GROUT IN THE PILE BLOCKOUTS. THE METHOD CHOSEN SHALL PROVIDE FOR A WATERTIGHT SEAL AT THE BOTTOM OF THE CAP UNTIL THE GROUT HAS HARDENED SO NO GROUT COMES IN CONTACT WITH THE STREAM.

PRESTRESSED CONCRETE BENT CAPS (FOR ONE BENT)

PIECE	LENGTH	NUMBER	TOTAL LENGTH
B-01	18'-11½"	2	37'-11"
B-02	9'-4"	1	9'-4"
TOTAL		3	47.25'

16" PRESTRESSED CONCRETE PILES
BENT No. 1

No. 8	LIN. FT. 320
PILE REDRIVES	EA. 4

16" PRESTRESSED CONCRETE PILES
BENT No. 2

No. 8	LIN. FT. 320
PILE REDRIVES	EA. 4
PREDRILLING FOR PILES	LIN. FT. 151

PROJECT NO. B-5124
NASH COUNTY
STATION: 36+88.50 -L-

SHEET 5 OF 5

STATE OF NORTH CAROLINA
DEPARTMENT OF TRANSPORTATION
RALEIGH

SUBSTRUCTURE

BENT No. 1 & No. 2

ALTERNATE 1

NORTH CAROLINA PROFESSIONAL SEAL 025516 ENGINEER EMILY E. MURRAY
3/9/2015
DocuSigned by: Emily Murray
CAEB97AEDC5B4E0...

REVISIONS						SHEET NO.
NO.	BY:	DATE:	NO.	BY:	DATE:	S-39E
1			3			TOTAL SHEETS
2			4			71

DRAWN BY : M. A. ALLEN DATE : 3/15
CHECKED BY : E. E. MURRAY DATE : 3/15

09-MAR-2015 07:55
R:\Structures\FinalPlans\DocuSign Setup\402_005_B-5124_SMU_S2-0.dgn
nruffin