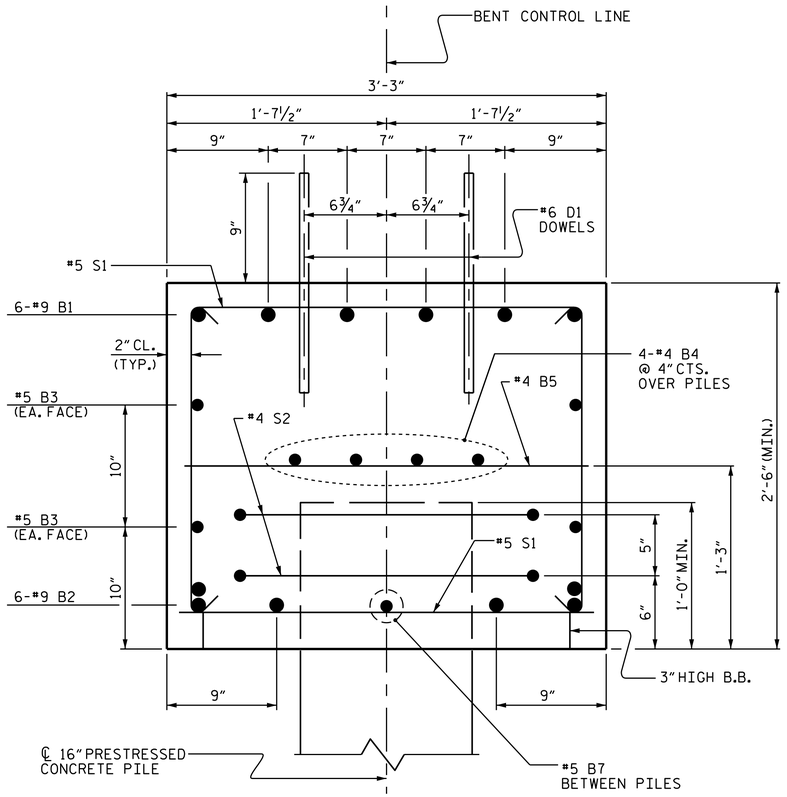

SECTION A-A

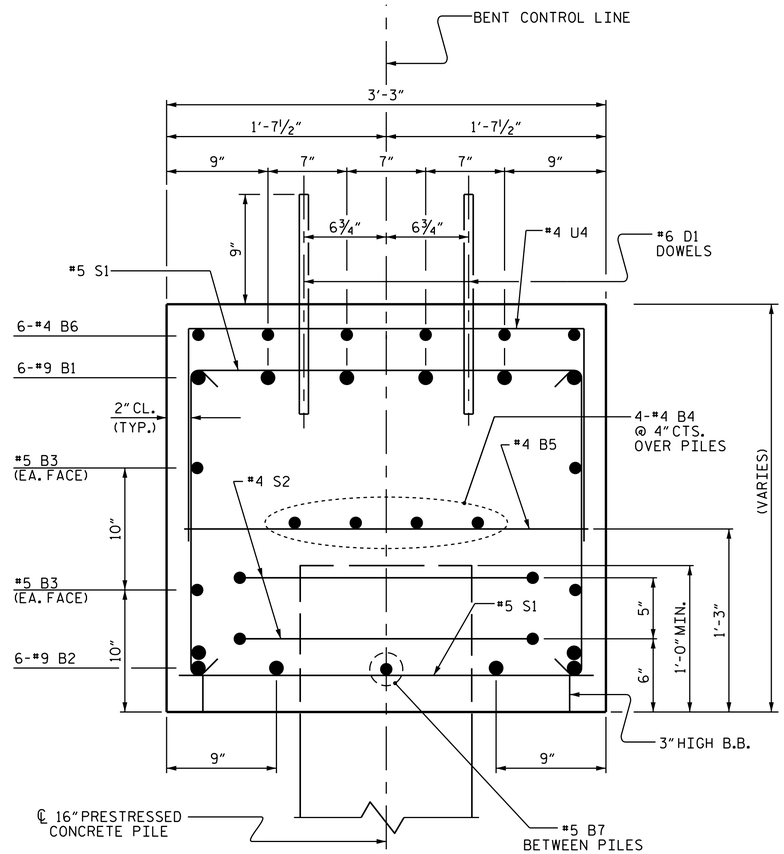

SECTION B-B

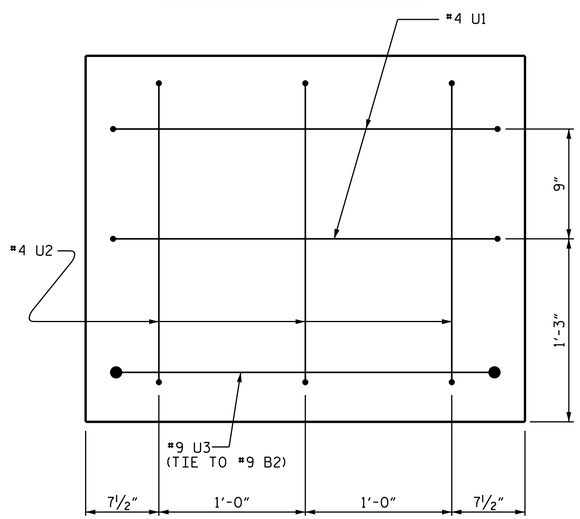

END OF CAP VIEW

(TYPICAL BOTH ENDS)

BAR TYPES

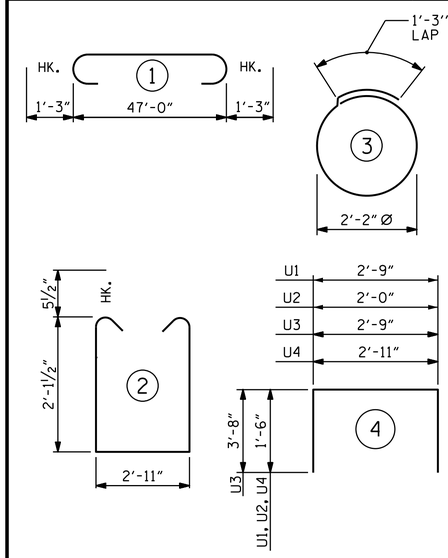

ALL BAR DIMENSIONS ARE OUT TO OUT.

BILL OF MATERIAL FOR ONE BENT

BAR	NO.	SIZE	TYPE	LENGTH	WEIGHT
B1	6	#9	1	49'-6"	1,010
B2	6	#9	STR	47'-1"	960
B3	4	#5	STR	47'-2"	197
B4	8	#4	STR	24'-10"	133
B5	12	#4	STR	2'-11"	23
B6	6	#4	STR	27'-4"	110
B7	5	#5	STR	6'-10"	36
D1	60	#6	STR	1'-6"	135
S1	49	#5	2	8'-1"	413
S2	12	#4	3	8'-2"	65
U1	4	#4	4	5'-9"	15
U2	6	#4	4	5'-0"	20
U3	2	#9	4	10'-1"	69
U4	19	#4	4	5'-11"	75

REINFORCING STEEL (FOR ONE BENT) 3,261 LBS.

CLASS A CONCRETE BREAKDOWN (FOR ONE BENT)

POUR #1 (CAP) ▲15.0 CU.YDS.

TOTAL CLASS A CONCRETE 15.0 CU.YDS.

16" PRESTRESSED CONCRETE PILES (FOR ONE BENT)

No. 6 LIN. FT. 240

PREDRILLING FOR PILES (BENT No. 2 ONLY) LIN. FT. = 113

PILE REDRIVES (FOR ONE BENT) EA. 3

▲ CONCRETE DISPLACED BY THE 16" PRESTRESSED CONCRETE PILES HAS BEEN DEDUCTED FROM THE CLASS A CONCRETE QUANTITY.

PROJECT NO. B-5124

NASH COUNTY

STATION: 36+88.50 -L-

SHEET 3 OF 3

STATE OF NORTH CAROLINA
DEPARTMENT OF TRANSPORTATION
RALEIGH

SUBSTRUCTURE

BENT No. 1 & No. 2

NORTH CAROLINA PROFESSIONAL SEAL 14045 ENGINEER TIMOTHY L. COGGINS

3/9/2015

DocuSigned by: Tim Coggins DEFD4A8D48FA47B...

REVISIONS						SHEET NO.
NO.	BY:	DATE:	NO.	BY:	DATE:	S-39
1			3			TOTAL SHEETS
2			4			71

DRAWN BY : M.D.PISO DATE : 06-04-14
CHECKED BY : T.L. COGGINS, P.E. DATE : 10-03-14

DRAWN BY : DGE 05/10
CHECKED BY : MKT 05/10

09-MAR-2015 07:55
R:\Structures\FinalPlans\DocuSign Setup\402_005_B-5124_SMU_S2-0.dgn
gruffin

STR. #2