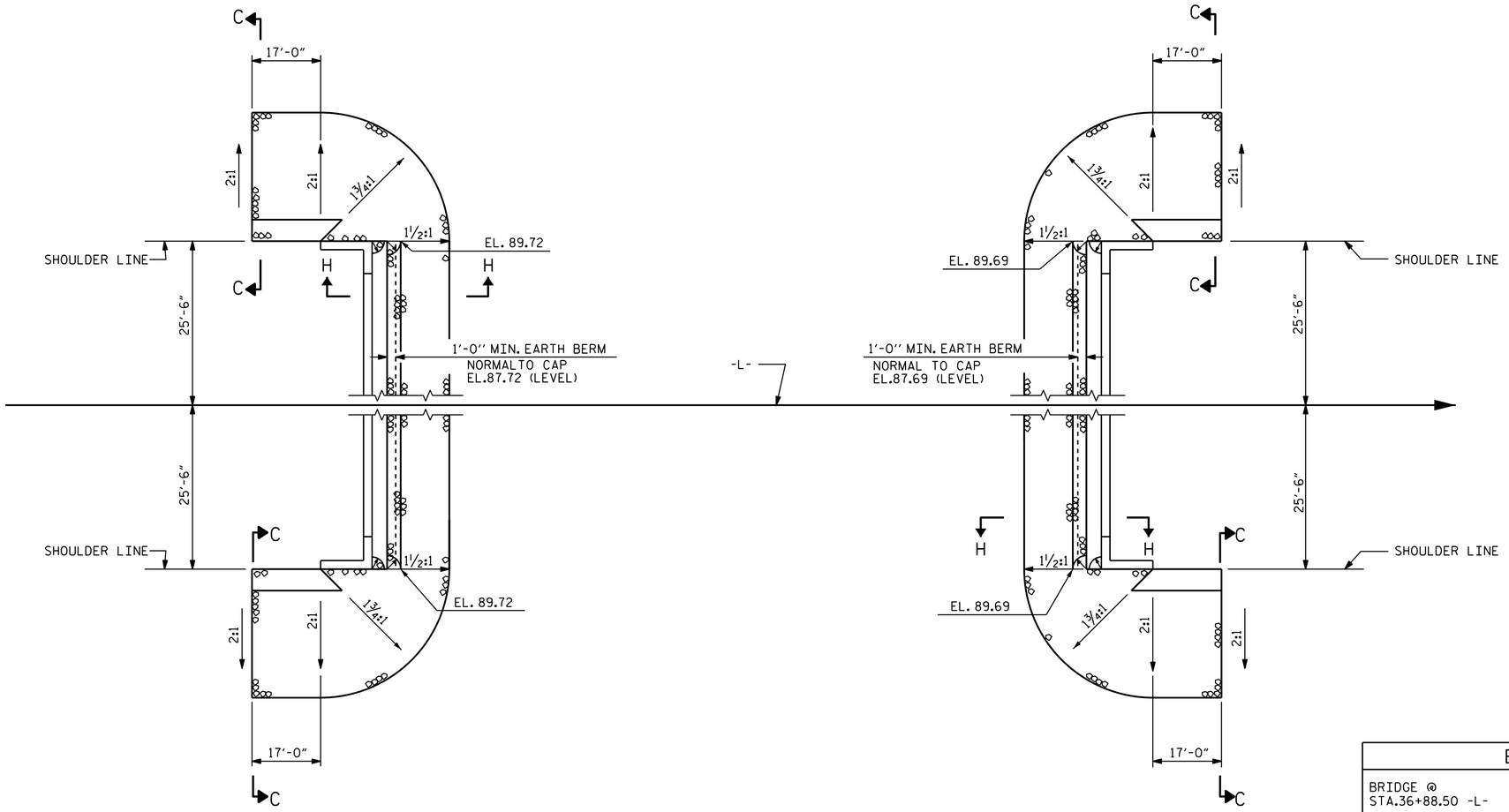

END BENT No. 1

END BENT No. 2

RIP RAP

ESTIMATED QUANTITIES		
BRIDGE @ STA.36+88.50 -L-	RIP RAP CLASS II (2'-0" THICK)	GEOTEXTILE FOR DRAINAGE
	TONS	SQUARE YARDS
END BENT No. 1	190	211
END BENT No. 2	175	194

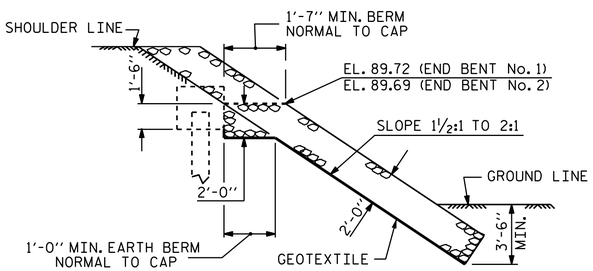

SECTION H-H

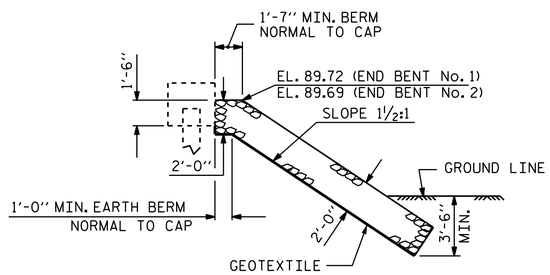

℄ SECTION

BERM RIP RAPPED

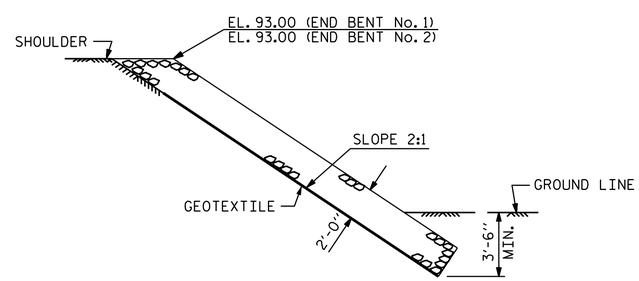

SECTION C-C

PROJECT NO. B-5124

NASH COUNTY

STATION: 36+88.50 -L-

STATE OF NORTH CAROLINA
DEPARTMENT OF TRANSPORTATION
RALEIGH

RIP RAP DETAILS

NORTH CAROLINA PROFESSIONAL SEAL 14045 ENGINEER TIMOTHY L. COGGINS
3/9/2015
DocuSigned by: Tim Coggins
DEFD4A8D48FA47B...

REVISIONS						SHEET NO.
NO.	BY:	DATE:	NO.	BY:	DATE:	S-45
1			3			TOTAL SHEETS
2			4			71

ASSEMBLED BY : REZA KOUCHEKI DATE : 2/18/14
CHECKED BY : D. G. ELY DATE : 4/1/14

DRAWN BY : REK 1/84
CHECKED BY : RDU 1/84

REV. 5/1/06R TLA/GM
REV. 10/1/11 MAA/GM
REV. 12/21/11 MAA/GM

09-MAR-2015 07:55
R:\Structures\Final Plans\DocuSign Setup\402_005_B-5124_SMU_S2-0.dgn
nrutfin

STR. #2