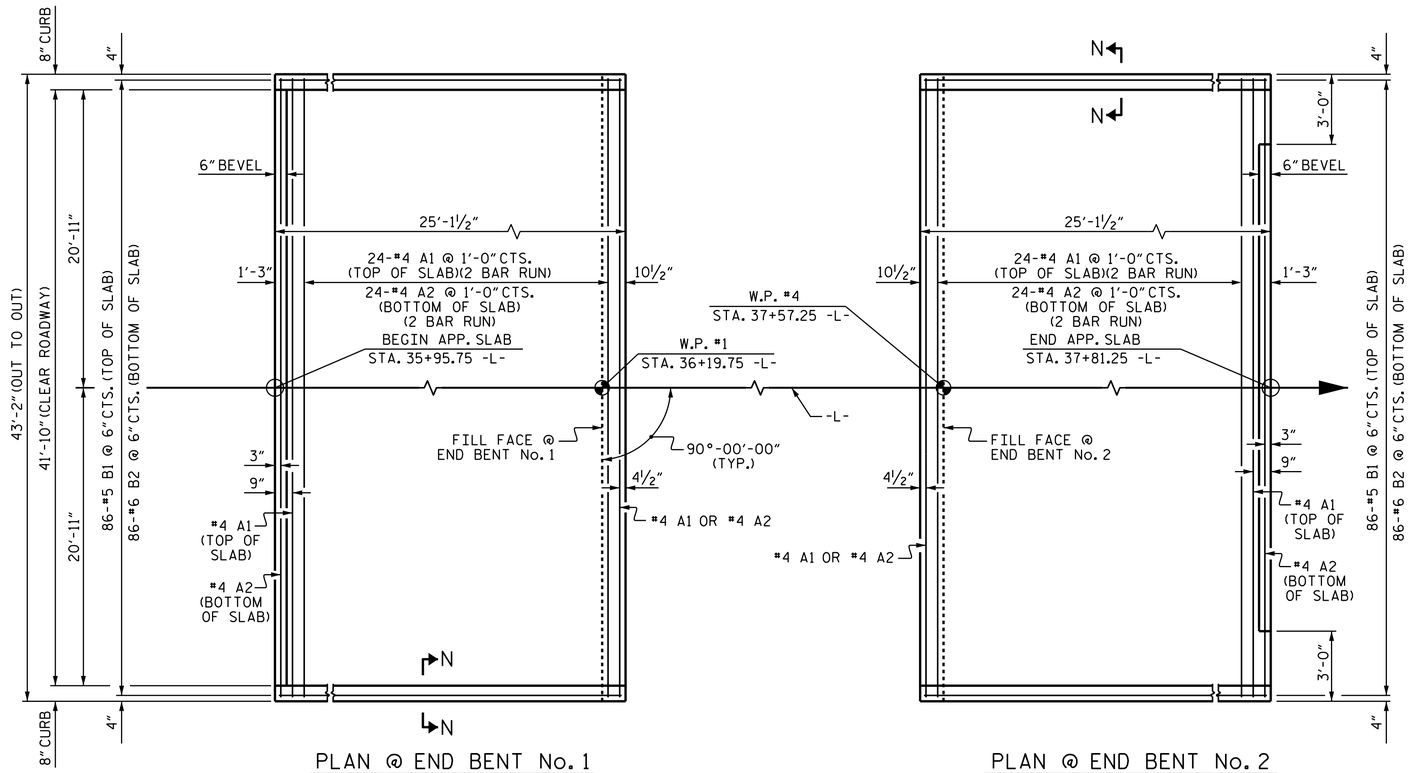

PLAN @ END BENT No. 1

PLAN @ END BENT No. 2

DIMENSIONS SHOWN ARE TYPICAL FOR BOTH APPROACH SLABS UNLESS OTHERWISE NOTED.

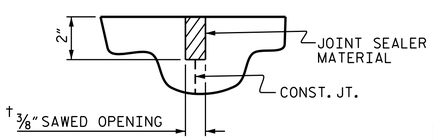

DETAIL "A"

APPROACH SLAB GROOVING	
1913	SQ. FT.

NOTES

FOR BRIDGE APPROACH FILL INCLUDING GEOTEXTILE, 4" Ø DRAINAGE PIPE, AND #78M STONE BACKFILL, SEE ROADWAY PLANS.

GEOTEXTILE SHALL BE TYPE 1 IN ACCORDANCE WITH THE STANDARD SPECIFICATIONS SECTION 1056.

#78M STONE BACKFILL (CLASS V SELECT MATERIAL) SHALL BE IN ACCORDANCE WITH STANDARD SPECIFICATIONS SECTION 1016.

#78M STONE BACKFILL IS TO BE CONTINUOUS ALONG FILL FACE OF BACKWALL FROM OUTSIDE EDGE TO OUTSIDE EDGE OF APPROACH SLAB.

FOR THE 4" Ø DRAINAGE PIPE OUTLET(S), SEE ROADWAY STANDARD DRAWINGS.

AREA BETWEEN THE WINGWALL AND APPROACH SLAB SHALL BE GRADED TO DRAIN THE WATER AWAY FROM THE FILL FACE OF THE BRIDGE AND SHALL BE PAVED. SEE ROADWAY PLANS.

APPROACH SLAB CONCRETE SHALL BE POURED AFTER CONCRETE WEARING SURFACE IS PLACED.

THE JOINT OPENING AT THE APPROACH SLAB/CONCRETE WEARING SURFACE INTERFACE SHALL BE SAWED NO MORE THAN 12 HOURS AFTER THE APPROACH SLAB IS CAST. THE JOINT SHALL BE CLEANED OF ALL DEBRIS BEFORE THE SEALANT IS APPLIED. THE JOINT SEALER MATERIAL SHALL CONFORM TO THE REQUIREMENTS OF SECTION 1028-3 OF THE STANDARD SPECIFICATIONS.

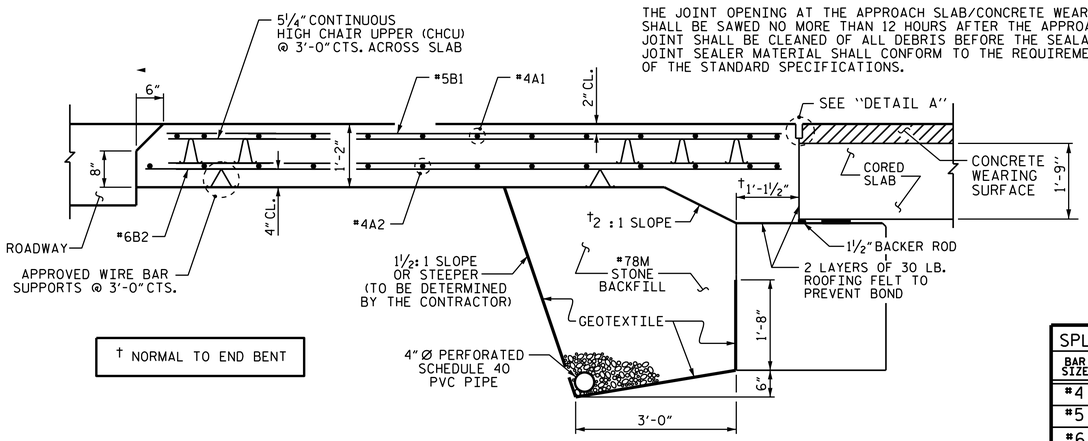

† NORMAL TO END BENT

SECTION THRU SLAB

SPLICE LENGTHS		
BAR SIZE	EPOXY COATED	UNCOATED
#4	2'-0"	1'-9"
#5	2'-6"	2'-2"
#6	3'-10"	2'-7"

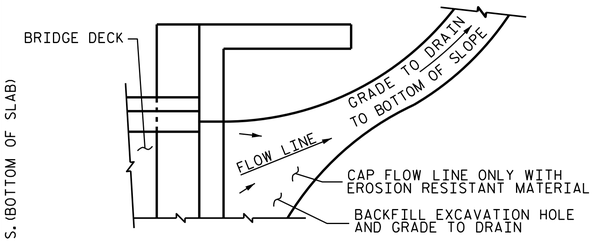

NOTE: IF THE APPROACH SLAB IS NOT CONSTRUCTED IMMEDIATELY AFTER THE BACKFILLING OF THE END BENT EXCAVATION, GRADE TO DRAIN TO THE BOTTOM OF THE SLOPE AND PROVIDE EROSION RESISTANT MATERIAL, SUCH AS FIBERGLASS ROVING OR AS DIRECTED BY THE ENGINEER TO PREVENT SOIL EROSION AND TO PROTECT THE AREA ADJACENT TO THE STRUCTURE. THE CONTRACTOR WILL BE REQUIRED TO REMOVE THESE MATERIALS PRIOR TO CONSTRUCTION OF THE APPROACH SLAB.

TEMPORARY DRAINAGE DETAIL

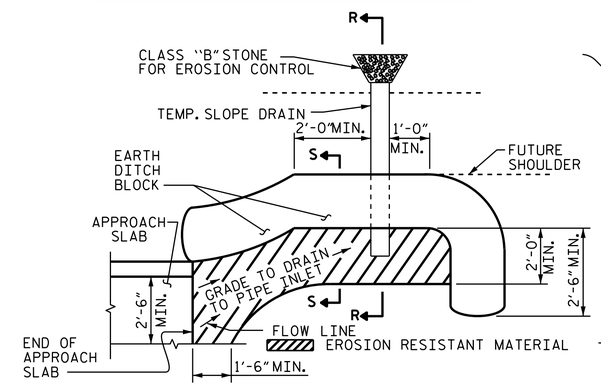

NOTE: IMMEDIATELY AFTER THE CONSTRUCTION OF THE APPROACH SLAB, THE CONTRACTOR SHALL PROVIDE TEMPORARY BERM AND SLOPE DRAIN. CONTRACTOR SHALL GRADE TO PIPE INLET AND PROVIDE EROSION RESISTANT MATERIAL AS SHOWN. THE EROSION RESISTANT MATERIAL SHALL BE EITHER 1) ASPHALT PLANT MIX, TYPE 1 OR TYPE 2, MIN. 2" DEPTH, 2) EROSION CONTROL MAT, OR 3) CONCRETE, AS DIRECTED BY THE ENGINEER. THE SLOPE DRAIN SHALL CONSIST OF A NON-PERFORATED TEMPORARY DRAINAGE PIPE, 12 INCHES IN DIAMETER.

PLAN VIEW

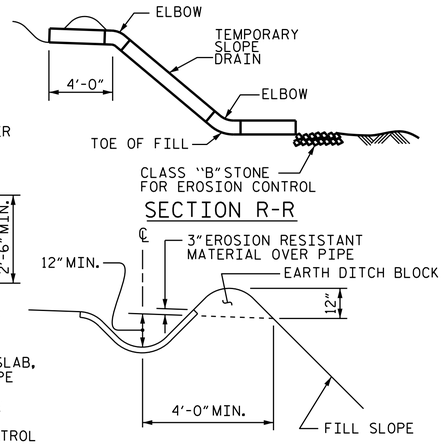

SECTION R-R

SECTION S-S

TEMPORARY BERM AND SLOPE DRAIN DETAILS

(TO BE USED WHEN SHOULDER BERM GUTTER IS REQUIRED)

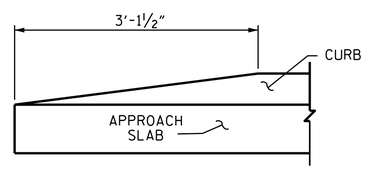

END OF CURB WITHOUT SHOULDER BERM GUTTER

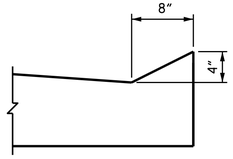

SECTION N-N

CURB DETAILS

BILL OF MATERIAL

APPROACH SLAB AT EB No. 1

BAR	NO.	SIZE	TYPE	LENGTH	WEIGHT
* A1	52	#4	STR	22'-5"	779
A2	52	#4	STR	22'-4"	776
* B1	86	#5	STR	24'-2"	2,168
B2	86	#6	STR	24'-8"	3,186
REINFORCING STEEL				LBS.	3,962
* EPOXY COATED REINFORCING STEEL				LBS.	2,947
CLASS AA CONCRETE				C. Y.	51.0

APPROACH SLAB AT EB No. 2

BAR	NO.	SIZE	TYPE	LENGTH	WEIGHT
* A1	52	#4	STR	22'-5"	779
A2	52	#4	STR	22'-4"	776
* B1	86	#5	STR	24'-2"	2,168
B2	86	#6	STR	24'-8"	3,186
REINFORCING STEEL				LBS.	3,962
* EPOXY COATED REINFORCING STEEL				LBS.	2,947
CLASS AA CONCRETE				C. Y.	51.1

PROJECT NO. B-5124

NASH COUNTY

STATION: 36+88.50 -L-

STATE OF NORTH CAROLINA
DEPARTMENT OF TRANSPORTATION
RALEIGH

BRIDGE APPROACH SLAB FOR PRESTRESSED CONCRETE CORED SLAB UNIT

90° SKEW

NORTH CAROLINA PROFESSIONAL SEAL 14045 ENGINEER TIMOTHY L. COGGINS 3/9/2015

DocuSigned by: Tim Coggins DEFD4A8D48FA47B...

REVISIONS								SHEET NO.
NO.	BY:	DATE:	NO.	BY:	DATE:			S-46
1			3					TOTAL SHEETS
2			4					71

DRAWN BY :	GHOLAMREZA KOUCHEKI	DATE :	2/18/14
CHECKED BY :	D.G.ELY	DATE :	2/18/14
DESIGN ENGINEER OF RECORD:	K.P. SEDAI	DATE :	11/17/14

09-MAR-2015 07:55
R:\Structures\Final Plans\DocuSign Setup\402_005_B-5124_SMU_S2-0.dgn
pruffin

STR. #2