PROJECT REFERENCE NO.	SHEET NO.
B-5124	5
R/W SHEET NO.	

ROADWAY DESIGN ENGINEER
NORTH CAROLINA PROFESSIONAL SEAL 025873 ENGINEER GARY R. LOVERING
DocuSign Envelope ID: DFD76F34A6BD425... Gary Lovering 1/29/2015

HYDRAULICS ENGINEER
NORTH CAROLINA PROFESSIONAL SEAL 34364 ENGINEER TRENTON J. CROMMER
DocuSign Envelope ID: FA65D1F852C9424... TRENTON CROMMER 1/29/2015

NAD 83/NSRS 2007

SKETCH OF PAVEMENT/BRIDGE RELATIONSHIP

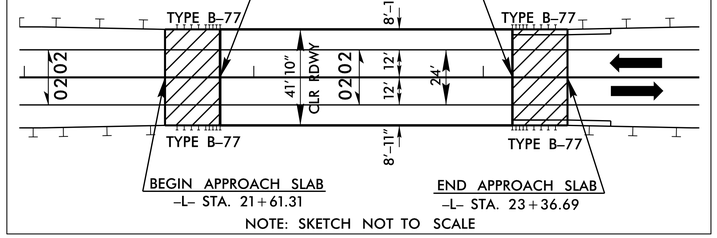

25

30

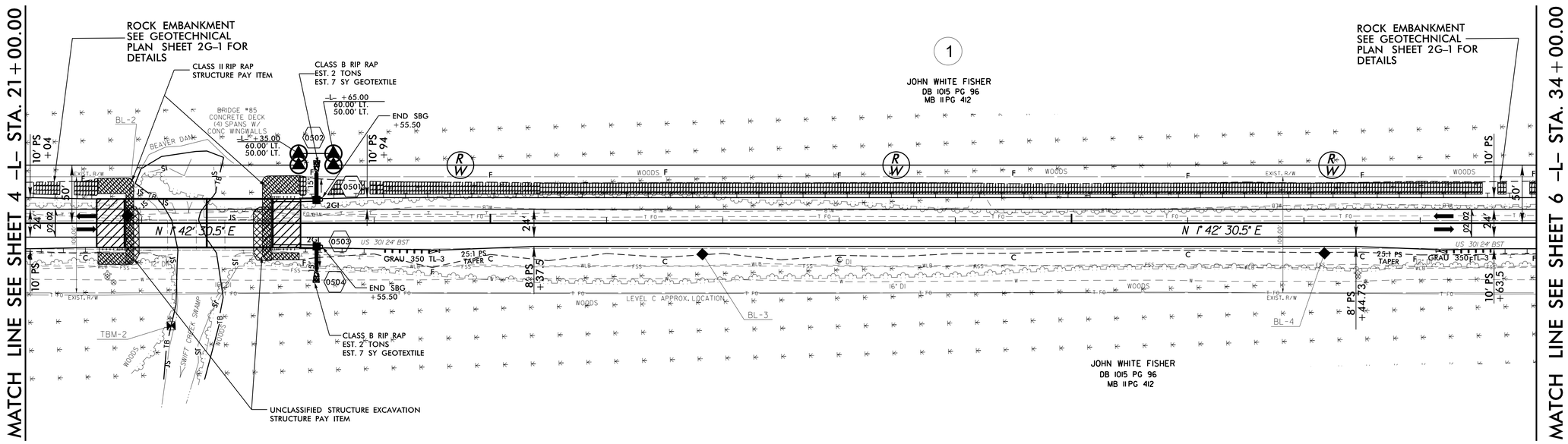

APPROACH SLAB

NOTES:
1) SEE SHEET 10 FOR -L- PROFILE
2) SEE SHEETS S1-001 THROUGH S1-022 FOR STRUCTURE PLANS

8/17/99

28-JAN-2015 14:43
R:\Roadway\Proj\B-5124_LR_PSH5.dgn
$$USERNAME$$