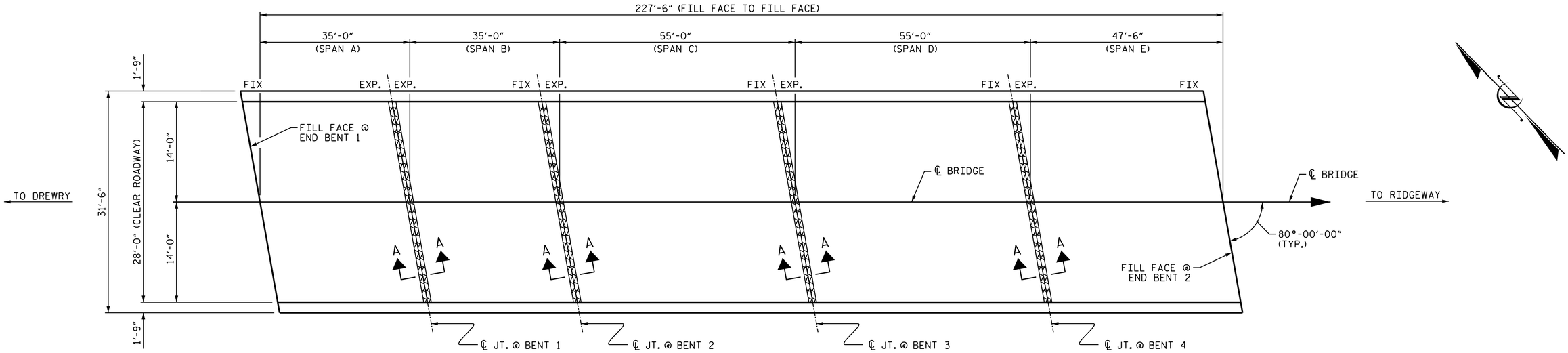

PLAN OF SPANS

FOR SECTION A-A, SEE SHEET SP-12.

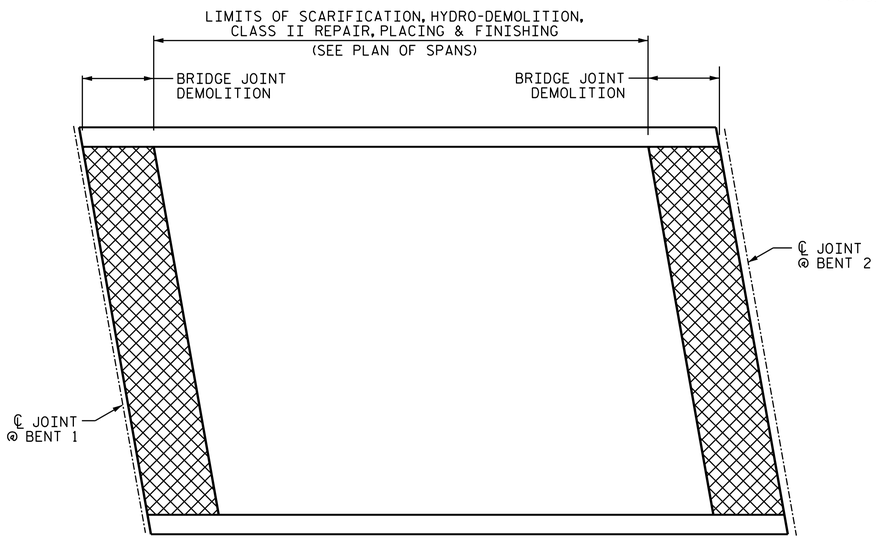

PLAN

SPAN B SHOWN, OTHER SPANS SIMILAR.

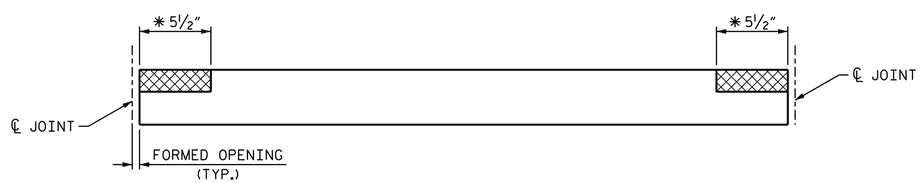

ELEVATION

✱ DIMENSION MEASURED PERPENDICULAR TO JOINT

BRIDGE JOINT DEMOLITION

NOTES

EXISTING JOINTS AND DECK DRAINS SHALL BE SEALED PRIOR TO BEGINNING SURFACE PREPARATION OF BRIDGE DECK.

EXISTING DIMENSIONS AND BRIDGE CONDITION ARE FROM THE BEST INFORMATION AVAILABLE. THE CONTRACTOR SHALL FIELD VERIFY THE INFORMATION SHOWN ON THE PLANS AND NOTIFY THE ENGINEER IF ACTUAL DIMENSIONS AND CONDITIONS DIFFER.

THE CONTRACTOR SHALL PROVIDE A METHOD OF HANDLING UNEXPECTED BLOW THROUGH OF THE DECK.

THE CONTRACTOR MUST COLLECT, TREAT AND DISPOSE OF RUN-OFF WATER FROM THE HYDRO-DEMOLITION PROCESS, SEE MANAGING BRIDGE WASH WATER SPECIAL PROVISION.

FOR SUBMITTAL OF WORKING DRAWINGS, SEE SPECIAL PROVISIONS.

FOR FALSEWORK AND FORMWORK, SEE SPECIAL PROVISIONS.

FOR CRANE SAFETY, SEE SPECIAL PROVISIONS.

FOR GROUT FOR STRUCTURES, SEE SPECIAL PROVISIONS.

IT IS THE CONTRACTOR'S RESPONSIBILITY TO FOLLOW ALL STATE AND FEDERAL SAFETY REQUIREMENTS.

FOR CONTROL OF TRAFFIC AND LIMITS ON PHASING OF CONSTRUCTION, SEE TRAFFIC CONTROL PLANS.

DURING CONSTRUCTION, BERMS OR APPROPRIATE MEASURES SHALL BE USED TO ENSURE HYDRO-DEMOLITION WATER DOES NOT FLOW OR MIGRATE INTO ACTIVE TRAVEL LANES.

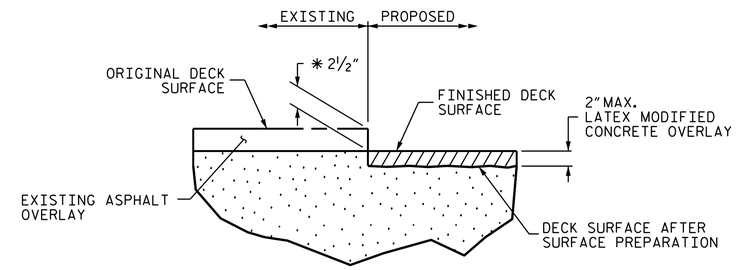

DETAIL FOR LATEX MODIFIED CONCRETE OVERLAY

✱ ASSUMES 2½" EXISTING ASPHALT OVERLAY ON THE BRIDGE. THE CONTRACTOR SHALL CONFIRM EXISTING ASPHALT THICKNESS AND ADJUST AS NECESSARY.

PROJECT NO. I-0914BB

WARREN COUNTY

BRIDGE NO.: 40

NORTH CAROLINA PROFESSIONAL SEAL 16301 ENGINEER TING HSIUNG FANG

DocuSigned by: Ting H. Fang
E72088400977435...
12/18/2014

STATE OF NORTH CAROLINA
DEPARTMENT OF TRANSPORTATION
RALEIGH

PLAN VIEW OF BRIDGE 40 ON SR 1224 (RIDGEWAY-DREWRY RD.) OVER I-85

REVISIONS						SHEET NO.
NO.	BY:	DATE:	NO.	BY:	DATE:	SP-10
1			3			TOTAL SHEETS
2			4			28

DRAWN BY : T. KIRSCHBAUM DATE : 11/2013
CHECKED BY : T. FANG DATE : 11/2013

18-DEC-2014 12:14
K:\TIPProjects-I\I0914BB\Structures\Preservation\FinalPlans\bdg40_prep_planf.dgn
ttfang