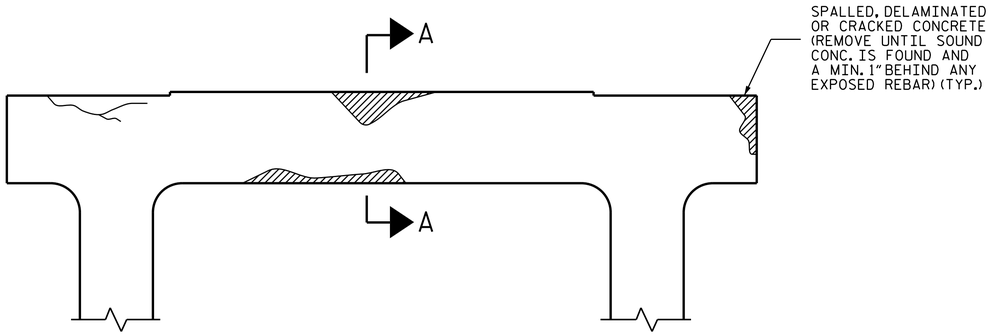

BENT CAP REPAIRS

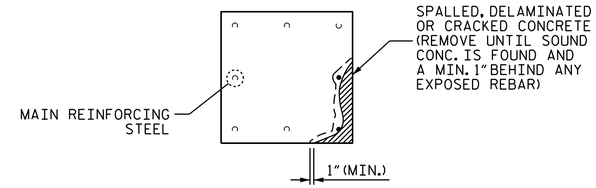

PLAN OF COLUMN

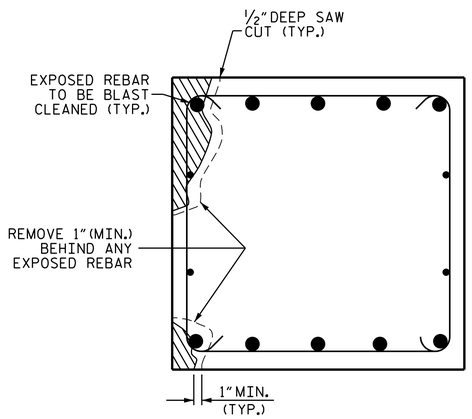

SECTION THRU CAP

CAP REPAIR

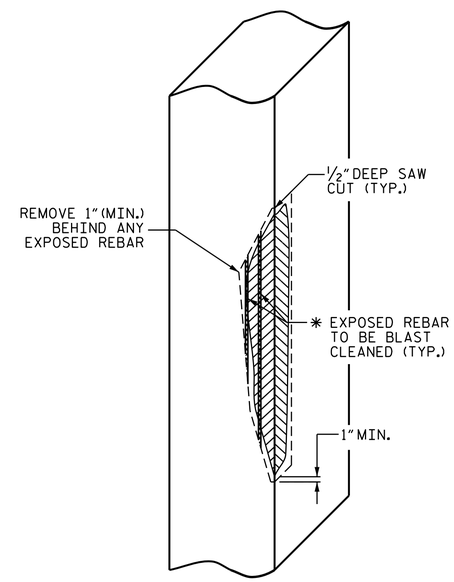

ELEVATION OF COLUMN

* DUE TO LACK OF CONFINEMENT, STEEL REPAIR LENGTH SHALL NOT EXCEED 10 FEET.

COLUMN REPAIR

PROJECT NO. I-0914BB

WARREN COUNTY

BRIDGE NO.: 2, 40 & 51

NORTH CAROLINA PROFESSIONAL SEAL 16301 ENGINEER TING HSILUNG FANG

DocuSigned by: Ting H. Fang
E72088400977435...
12/18/2014

STATE OF NORTH CAROLINA
DEPARTMENT OF TRANSPORTATION
RALEIGH

TYPICAL
CAP AND COLUMN
REPAIR DETAILS

REVISIONS						SHEET NO.
NO.	BY:	DATE:	NO.	BY:	DATE:	SP-27
1			3			TOTAL SHEETS
2			4			28

DRAWN BY : T. KIRSCHBAUM DATE : 11/4/13
CHECKED BY : T. H. FANG DATE : 11/8/13

NCBDS