NOTE:

REPAIR LOCATIONS AND ESTIMATE OF QUANTITIES ARE GIVEN WITH THE BEST INFORMATION AVAILABLE. IF ADDITIONAL REPAIRS NOT SHOWN ON THE DRAWINGS ARE DEEMED NECESSARY BY THE ENGINEER, THE ENGINEER SHALL NOTE ON THE DRAWINGS THE APPROXIMATE LOCATION AND DESCRIPTION OF THE REPAIRS AND ADJUST THE ACTUAL QUANTITIES ENTERED INTO THE REPAIR QUANTITY TABLE.

FOR STRUCTURE REPAIRS, SEE "TYPICAL CAP & COLUMN REPAIRS" SHEET.

EPOXY COATING SHALL BE APPLIED TO THE TOP FACE OF THE BENT CAP.

CONCRETE REPAIR

SHOTCRETE REPAIR

ERI - EPOXY RESIN INJECTION

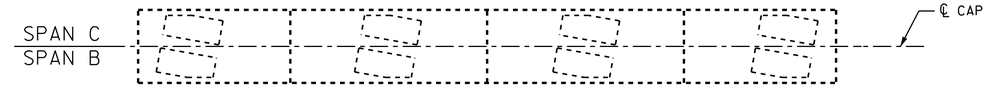

TOP OF CAP

END VIEW
NORTH FACE

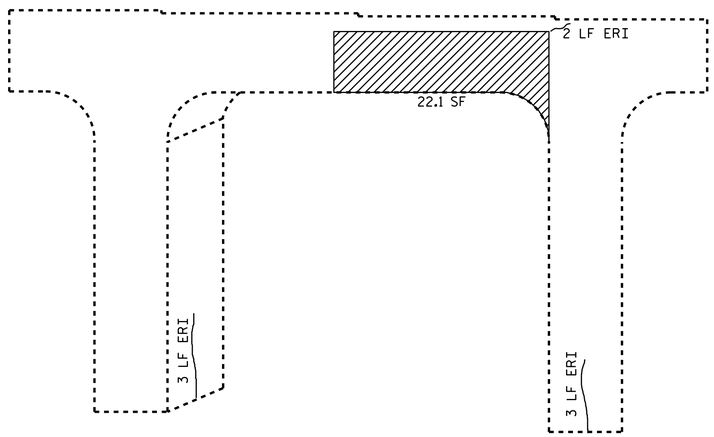

ELEVATION
WEST FACE

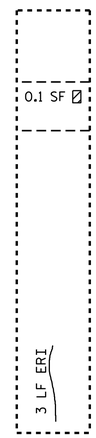

END VIEW
SOUTH FACE

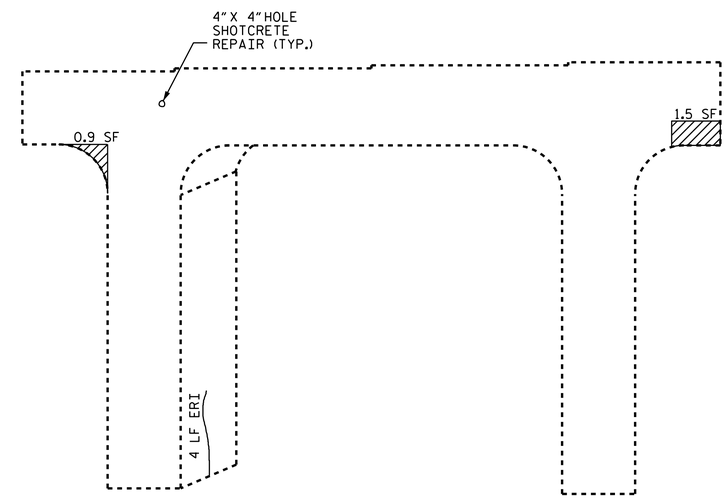

ELEVATION
EAST FACE

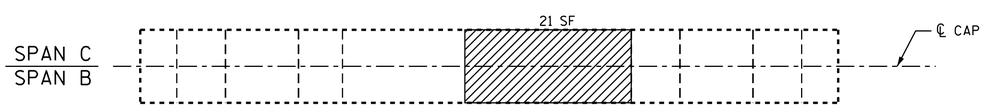

BOTTOM OF CAP

REPAIR QUANTITY TABLE

REPAIRS BENT 2	QUANTITIES			
	ESTIMATE		ACTUAL	
SHOTCRETE REPAIRS	AREA SF.	VOLUME CF.	AREA SF.	VOLUME CF.
CAP (VERTICAL FACE)	34.4	8.6		
CAP (HORIZONTAL FACE)	21.0	5.3		
COLUMN (VERTICAL FACE)	0.0	0.0		
CONCRETE REPAIRS	0.0	0.0		
EPOXY RESIN INJECTION		LN. FT.		LN. FT.
CAP		2.0		
COLUMN		16.5		
EPOXY COATING		SQ. FT.		SQ. FT.
TOP OF CAP		82.0		

VALUES IN CHART REPRESENT ESTIMATED REPAIR TOTALS AFTER REMOVAL OF UNSOUND CONCRETE, MIN. OF 1" BEHIND REBAR AND MIN. 1" CL TO SAWCUT. SEE REPAIR DETAILS.

NORTH CAROLINA PROFESSIONAL SEAL 16301 ENGINEER TING-HSIUNG FANG

DocuSigned by: Ting H. Fang
E72086A09774351...
12/18/2014

PROJECT NO. I-0914BB
WARREN COUNTY
BRIDGE NO.: 40

STATE OF NORTH CAROLINA
DEPARTMENT OF TRANSPORTATION
RALEIGH

SUBSTRUCTURE REPAIR
BENT 2

REVISIONS						SHEET NO.
NO.	BY:	DATE:	NO.	BY:	DATE:	SP-16
1			3			TOTAL SHEETS
2			4			28

DRAWN BY : E.I. OMILE DATE : 10/2013
CHECKED BY : T. KIRSCHBAUM DATE : 10/2013
DESIGN ENGINEER OF RECORD: DATE :

17-DEC-2014 10:05
K:\TIPProjects-I\I0914BB\Structures\Preservation\FinalPlans\bdg40_prep_planf.dgn
ttfang