NOTES:

REPAIR LOCATIONS AND ESTIMATE OF QUANTITIES ARE GIVEN WITH THE BEST INFORMATION AVAILABLE. IF ADDITIONAL REPAIRS NOT SHOWN ON THE DRAWINGS ARE DEEMED NECESSARY BY THE ENGINEER, THE ENGINEER SHALL NOTE ON THE DRAWINGS THE APPROXIMATE LOCATION AND DESCRIPTION OF THE REPAIRS AND ADJUST THE ACTUAL QUANTITIES ENTERED INTO THE REPAIR QUANTITY TABLE.

FOR STRUCTURE REPAIRS, SEE "TYPICAL CAP & COLUMN REPAIRS" SHEET.

EPOXY COATING SHALL BE APPLIED TO THE TOP FACE OF THE BENT CAP.

CONCRETE REPAIR

SHOTCRETE REPAIR

ERI - EPOXY RESIN INJECTION

TOP OF CAP

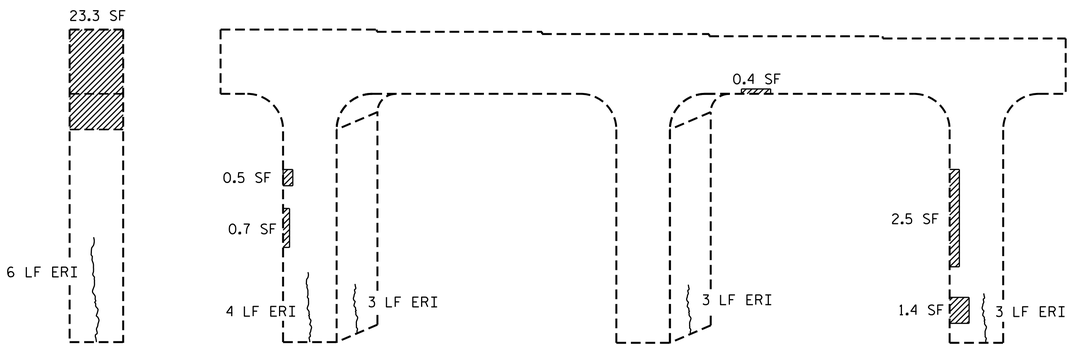

END VIEW
NORTH FACE

ELEVATION
WEST FACE

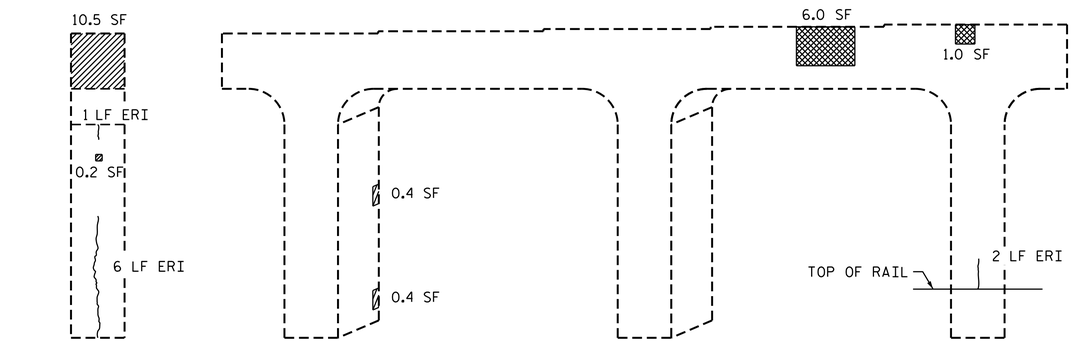

END VIEW
SOUTH FACE

ELEVATION
EAST FACE

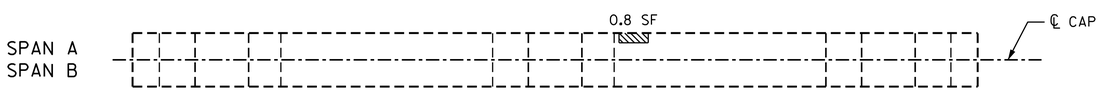

BOTTOM OF CAP

REPAIR QUANTITY TABLE				
REPAIRS BENT 1	QUANTITIES			
	ESTIMATE		ACTUAL	
SHOTCRETE REPAIRS	AREA SF.	VOLUME CF.	AREA SF.	VOLUME CF.
CAP (VERTICAL FACE)	34.2	8.6		
CAP (HORIZONTAL FACE)	0.8	0.2		
COLUMN (VERTICAL FACE)	6.1	1.5		
CONCRETE REPAIRS	7.0	1.8		
EPOXY RESIN INJECTION		LN. FT.		LN. FT.
CAP		0.0		
COLUMN		27.0		
EPOXY COATING		SQ. FT.		SQ. FT.
CAP		121.5		

VALUES IN CHART REPRESENT ESTIMATED REPAIR TOTALS AFTER REMOVAL OF UNSOUND CONCRETE, MIN. OF 1" BEHIND REBAR AND MIN. 1" CL TO SAWCUT. SEE REPAIR DETAILS.

NORTH CAROLINA PROFESSIONAL SEAL 16301 ENGINEER TING HSIUNG FANG

DocuSigned by: Ting H. Fang
E72088A0977435...
12/18/2014

PROJECT NO. I-0914BB
WARREN COUNTY
BRIDGE NO.: 51

STATE OF NORTH CAROLINA
DEPARTMENT OF TRANSPORTATION
RALEIGH

SUBSTRUCTURE REPAIR

BENT 1

REVISIONS						SHEET NO.
NO.	BY:	DATE:	NO.	BY:	DATE:	SP-24
1			3			TOTAL SHEETS
2			4			28

DRAWN BY : T. KIRSCHBAUM DATE : 11/1/13
CHECKED BY : T. H. FANG DATE : 11/7/13
DESIGN ENGINEER OF RECORD: DATE :

17-DEC-2014 10:05
K:\TIPProjects-1\I0914BB\Structures\Preservation\FinalPlans\bdg51_prep_planf.dgn
ttfang