NOTES:

REPAIR LOCATIONS AND ESTIMATE OF QUANTITIES ARE GIVEN WITH THE BEST INFORMATION AVAILABLE. IF ADDITIONAL REPAIRS NOT SHOWN ON THE DRAWINGS ARE DEEMED NECESSARY BY THE ENGINEER, THE ENGINEER SHALL NOTE ON THE DRAWINGS THE APPROXIMATE LOCATION AND DESCRIPTION OF THE REPAIRS AND ADJUST THE ACTUAL QUANTITIES ENTERED INTO THE REPAIR QUANTITY TABLE.

REPAIR CONCRETE BENT DIAPHRAGMS AS DIRECTED BY THE ENGINEER.

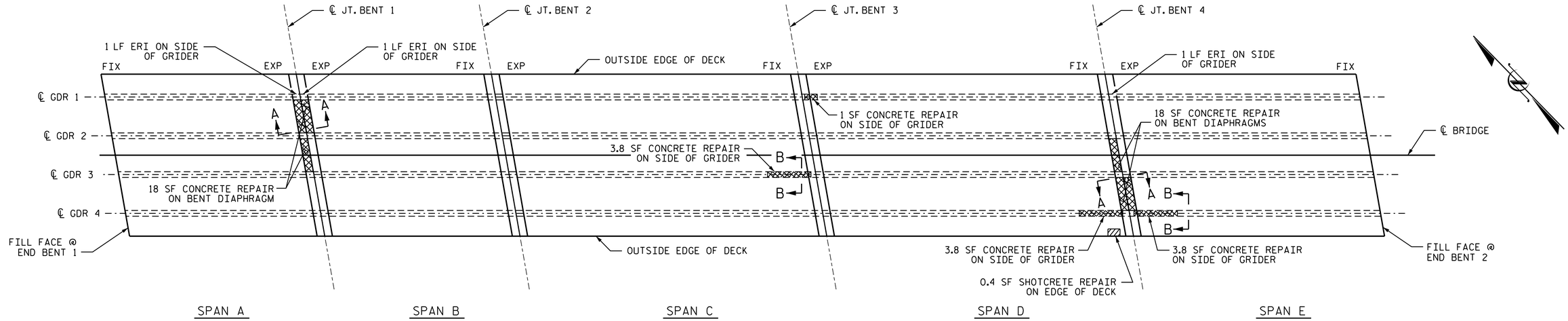

PLAN VIEW

(UNDERSIDE)

CONCRETE REPAIR

SHOTCRETE REPAIR

ERI - EPOXY RESIN INJECTION

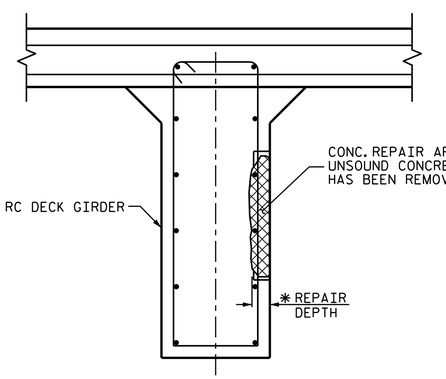

SECTION B-B

EXISTING REINFORCING STEEL LOCATIONS ARE FROM BEST INFORMATION AVAILABLE.

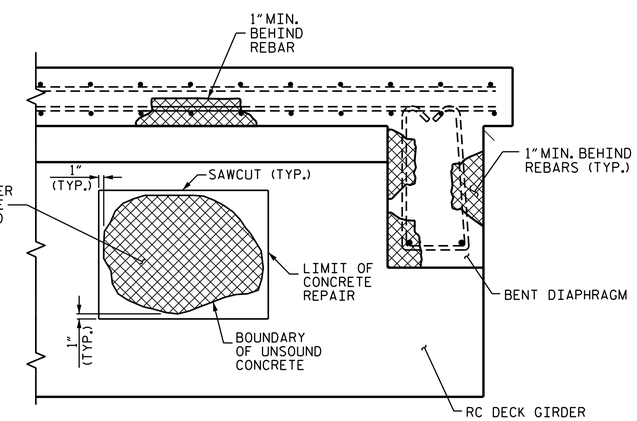

SECTION A-A

* IF REMOVAL OF UNSOUND CONCRETE RESULTS IN EXPOSING MORE THAN HALF THE DEPTH OF A REINFORCING BAR, REMOVE ADDITIONAL CONCRETE TO 1" BEHIND THE BAR WITHOUT DAMAGE TO REINFORCING BAR.

BILL OF MATERIAL

REPAIRS SPANS A THRU D	QUANTITIES			
	ESTIMATE		ACTUAL	
SHOTCRETE REPAIRS	AREA SF	VOLUME CF	AREA SF	VOLUME CF
DIAPHRAGMS	0.0	0.0		
GIRDERS	0.0	0.0		
UNDERSIDE OF DECK & OVERHANGS	0.4	0.1		
CONCRETE REPAIR	48.4	12.1		
EPOXY RESIN INJECTION		LN. FT		LN. FT
DIAPHRAGMS		0.0		
GIRDERS		3.0		
UNDERSIDE OF DECK & OVERHANGS		0.0		

VALUES IN CHART REPRESENT ESTIMATED REPAIR TOTALS AFTER REMOVAL OF LOOSE CONCRETE, MIN. OF 1" BEHIND REBAR. SEE SECTIONS A-A AND B-B FOR REPAIR DETAILS.

PROJECT NO. I-0914BB

WARREN COUNTY

BRIDGE NO.: 40

NORTH CAROLINA PROFESSIONAL SEAL 16301 ENGINEER HSIUNG FANG

DocuSigned by: E72088400977435...

12/18/2014

STATE OF NORTH CAROLINA
DEPARTMENT OF TRANSPORTATION
RALEIGH

SUPERSTRUCTURE AND BENT DIAPHRAGMS REPAIRS

REVISIONS								SHEET NO.
NO.	BY:	DATE:		NO.	BY:	DATE:		SP-13
1				3				TOTAL SHEETS
2				4				28

DRAWN BY : E.I. OMILE DATE : 10/2013
CHECKED BY : T. KIRSCHBAUM DATE : 10/2013
DESIGN ENGINEER OF RECORD: DATE :

17-DEC-2014 10:05
K:\TIPProjects-I\I0914BB\Structures\Preservation\FinalPlans\bdg40_prep_planf.dgn
tfang