DocuSign Envelope ID: 092FF86A-FF9F-4A0F-BAC7-07FE7A3BD109

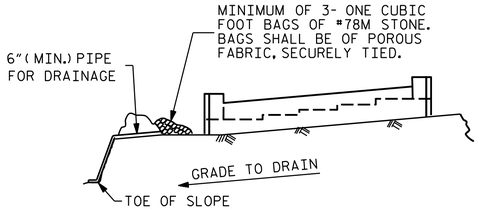

BAGGED STONE AND PIPE SHALL BE PLACED IMMEDIATELY AFTER COMPLETION OF END BENT EXCAVATION. PIPE MAY BE EITHER CONCRETE, CORRUGATED STEEL, CORRUGATED ALUMINUM ALLOY, OR CORRUGATED PLASTIC. PERFORATED PIPE WILL NOT BE ALLOWED.

BAGGED STONE SHALL REMAIN IN PLACE UNTIL THE ENGINEER DIRECTS THAT IT BE REMOVED. THE CONTRACTOR SHALL REMOVE AND DISPOSE OF SILT ACCUMULATIONS AT BAGGED STONE WHEN SO DIRECTED BY THE ENGINEER. BAGS SHALL BE REMOVED AND REPLACED WHENEVER THE ENGINEER DETERMINES THAT THEY HAVE DETERIORATED AND LOST THEIR EFFECTIVENESS.

NO SEPARATE PAYMENT WILL BE MADE FOR THIS WORK AND THE ENTIRE COST OF THIS WORK SHALL BE INCLUDED IN THE UNIT CONTRACT PRICE BID FOR THE SEVERAL PAY ITEMS.

TEMPORARY DRAINAGE AT END BENT

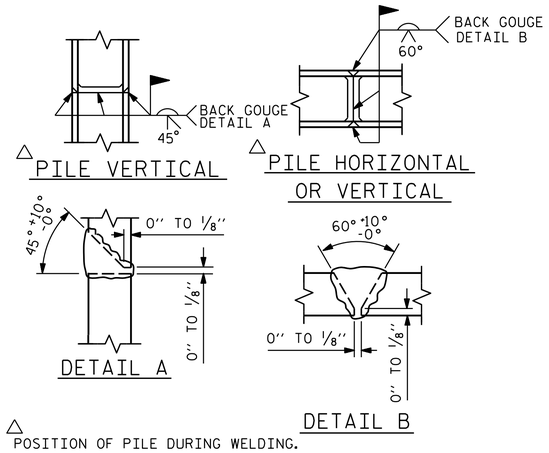

△ POSITION OF PILE DURING WELDING.

PILE SPLICE DETAILS

BAR TYPES

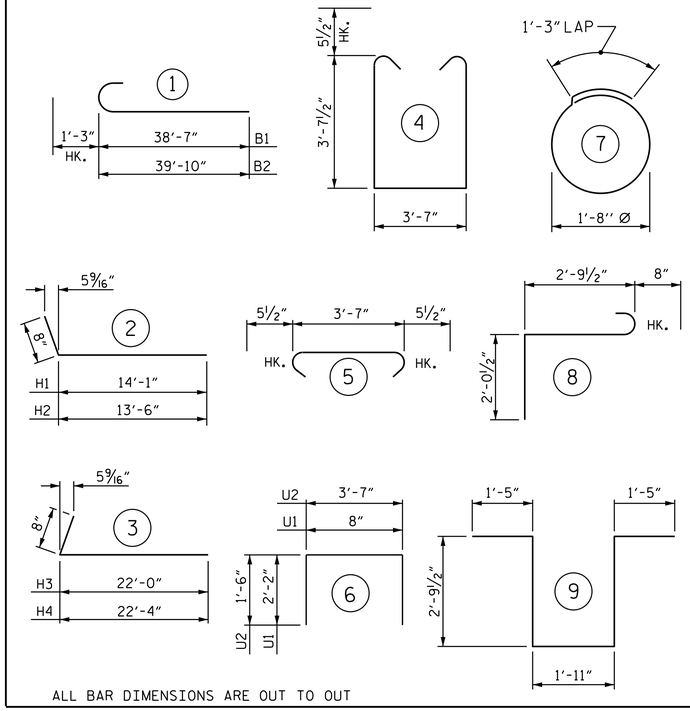

ALL BAR DIMENSIONS ARE OUT TO OUT

BILL OF MATERIAL

END BENT 2

BAR	NO.	SIZE	TYPE	LENGTH	WEIGHT
B1	10	#9	1	39'-10"	1354
B2	10	#9	1	41'-1"	1397
B3	10	#4	STR	13'-4"	89
B4	1	#4	STR	7'-8"	5
B5	1	#4	STR	8'-5"	6
B6	1	#4	STR	9'-3"	6
B7	1	#4	STR	10'-1"	7
B8	1	#4	STR	10'-10"	7
B9	30	#4	STR	25'-3"	506
B10	17	#4	STR	3'-7"	41
H1	18	#5	2	14'-9"	277
H2	18	#5	2	14'-2"	266
H3	14	#4	3	22'-8"	212
H4	14	#4	3	23'-0"	215
K1	30	#4	STR	25'-3"	506
K2	8	#4	STR	3'-7"	19
K3	2	#4	STR	3'-5"	5
S1	65	#5	4	11'-9"	797
S2	65	#5	5	4'-6"	305
S3	40	#4	7	6'-6"	174
S4	3	#6	8	5'-6"	25
S5	3	#6	9	10'-4"	47
U1	63	#4	6	5'-0"	210
U2	24	#4	6	6'-7"	106
V1	126	#5	STR	7'-4"	964
V2	36	#4	STR	8'-8"	208
V3	54	#4	STR	9'-4"	337

REINFORCING STEEL = 8091 LBS

CLASS A CONCRETE BREAKDOWN

POUR #1	CAP, LOWER PART OF WINGS, & COLLARS	53.4 C.Y.
POUR #2	UPPER PART OF WINGS, & BACKWALL	16.4 C.Y.
TOTAL CLASS A CONCRETE		69.8 C.Y.

HP 12 X 53 STEEL PILES:
NO. 11 303 LIN. FT.

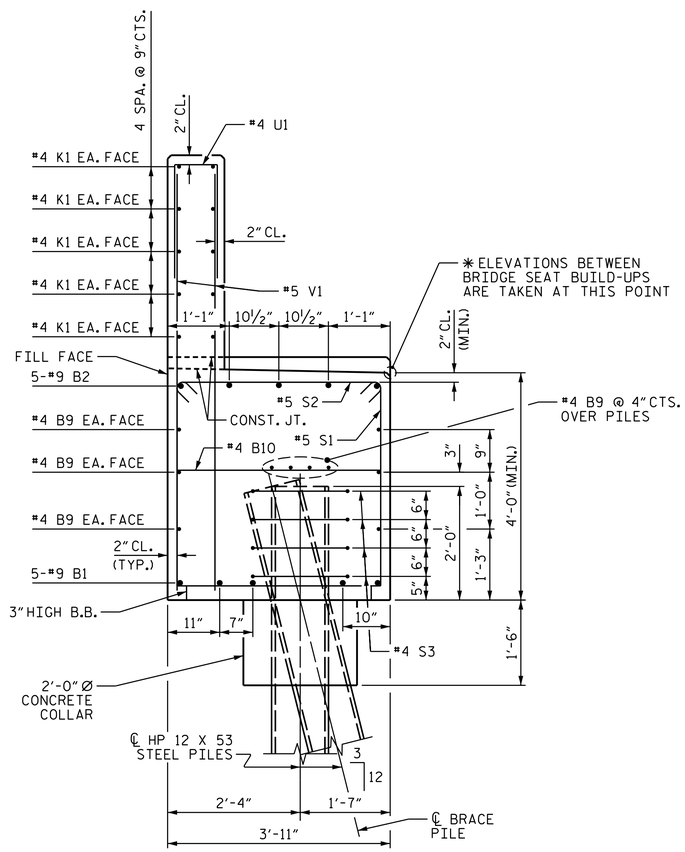

SECTION A-A

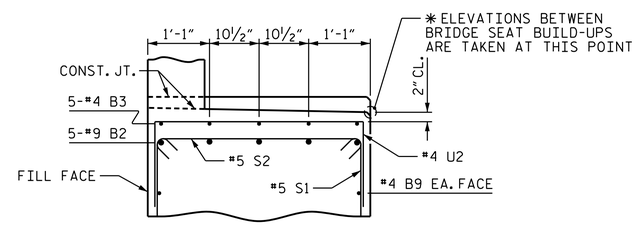

SECTION B-B

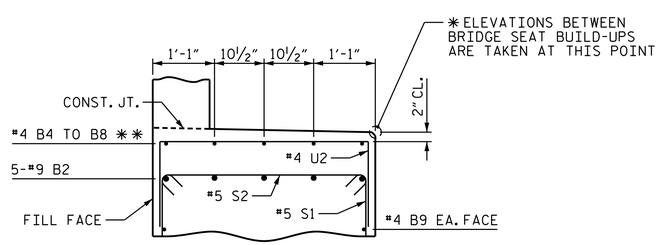

SECTION C-C

✱✱ (FILL FACE TO BACK FACE)

PROJECT NO. I-0914BB
WARREN COUNTY
STATION: 197+54.33 -L-

SHEET 3 OF 3

STATE OF NORTH CAROLINA
DEPARTMENT OF TRANSPORTATION
RALEIGH

SUBSTRUCTURE
END BENT #2

(SOUTHBOUND LANE)

REVISIONS								SHEET NO.
NO.	BY:	DATE:	NO.	BY:	DATE:			S-31
1			3					TOTAL SHEETS
2			4					72

DRAWN BY: J. T. WILLIAMS DATE: 7-2014
CHECKED BY: J. E. MONDOLFI DATE: 7-2014
DESIGN ENGINEER OF RECORD: J. E. MONDOLFI DATE: 7-2014

PLANS PREPARED BY:
Hatch Mott MacDonald
PO Box 700 Fuquay-Varina, NC 27526 (919) 552-2253 www.hatchmott.com
LICENSE NO. F-0669

NORTH CAROLINA PROFESSIONAL SEAL 20532 ENGINEER
DocuSigned by: JOSEPH E. MONDOLFI
9FD29B1FC2FB4D0... 10/17/2014

w:157077
R:\Structures_SBL\I0914BB_SMU_EB_SBL_01.dgn
9/11/2014 2:03:36 PM