DocuSign Envelope ID: 3F424BAB-583E-431A-81CE-1B677A5ACEC2

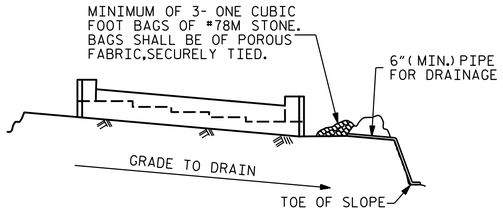

BAGGED STONE AND PIPE SHALL BE PLACED IMMEDIATELY AFTER COMPLETION OF END BENT EXCAVATION. PIPE MAY BE EITHER CONCRETE, CORRUGATED STEEL, CORRUGATED ALUMINUM ALLOY, OR CORRUGATED PLASTIC. PERFORATED PIPE WILL NOT BE ALLOWED.

BAGGED STONE SHALL REMAIN IN PLACE UNTIL THE ENGINEER DIRECTS THAT IT BE REMOVED. THE CONTRACTOR SHALL REMOVE AND DISPOSE OF SILT ACCUMULATIONS AT BAGGED STONE WHEN SO DIRECTED BY THE ENGINEER. BAGS SHALL BE REMOVED AND REPLACED WHENEVER THE ENGINEER DETERMINES THAT THEY HAVE DETERIORATED AND LOST THEIR EFFECTIVENESS.

NO SEPARATE PAYMENT WILL BE MADE FOR THIS WORK AND THE ENTIRE COST OF THIS WORK SHALL BE INCLUDED IN THE UNIT CONTRACT PRICE BID FOR THE SEVERAL PAY ITEMS.

TEMPORARY DRAINAGE AT END BENT

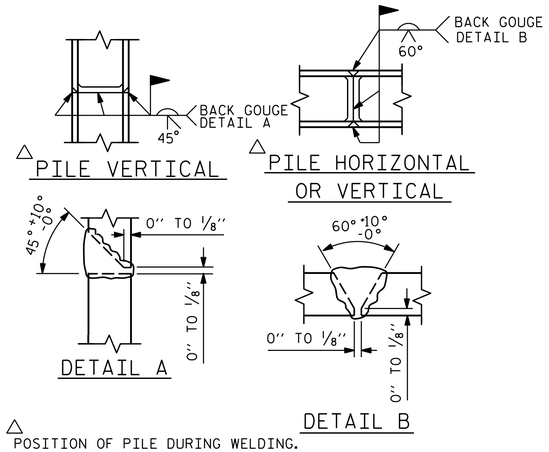

△ POSITION OF PILE DURING WELDING.

PILE SPLICE DETAILS

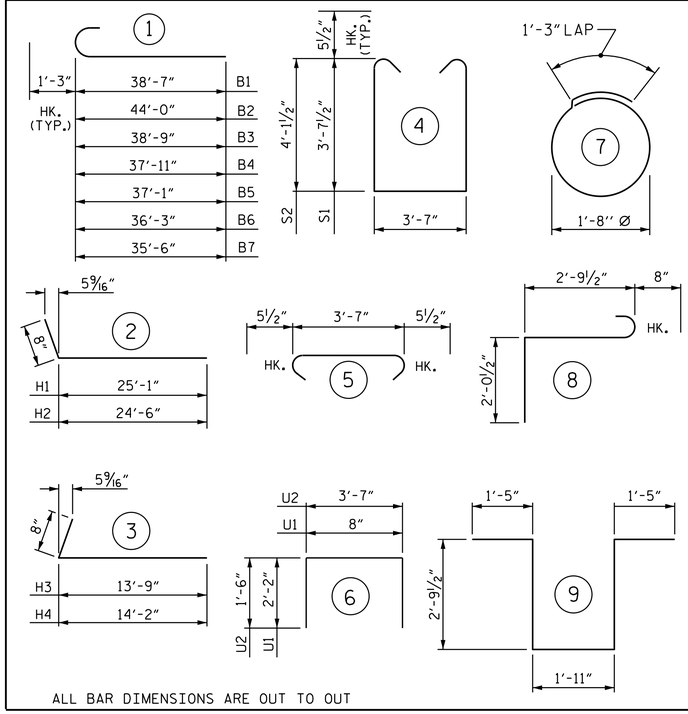

BILL OF MATERIAL

END BENT 2

BAR	NO.	SIZE	TYPE	LENGTH	WEIGHT
B1	10	#9	1	39'-10"	1354
B2	5	#9	1	45'-3"	769
B3	1	#9	1	40'-0"	136
B4	1	#9	1	39'-2"	133
B5	1	#9	1	38'-4"	130
B6	1	#9	1	37'-6"	128
B7	1	#9	1	36'-9"	125
B8	10	#4	STR	13'-4"	89
B9	1	#4	STR	12'-1"	8
B10	1	#4	STR	11'-3"	8
B11	1	#4	STR	10'-5"	7
B12	1	#4	STR	9'-7"	6
B13	1	#4	STR	8'-10"	6
B14	2	#4	STR	29'-3"	39
B15	30	#4	STR	25'-3"	506
B16	17	#4	STR	3'-7"	41
H1	14	#5	2	25'-9"	376
H2	14	#5	2	25'-2"	367
H3	18	#6	3	14'-5"	390
H4	18	#6	3	14'-10"	401
K1	30	#4	STR	25'-3"	506
K2	7	#4	STR	3'-7"	17
K3	3	#4	STR	3'-6"	7
S1	31	#5	4	11'-9"	380
S2	34	#5	4	12'-9"	452
S3	65	#5	5	4'-6"	305
S4	40	#4	7	6'-6"	174
S5	3	#6	8	5'-6"	25
S6	3	#6	9	10'-4"	47
U1	63	#4	6	5'-0"	210
U2	25	#4	6	6'-7"	110
V1	64	#5	STR	7'-10"	523
V2	62	#5	STR	7'-3"	469
V3	58	#5	STR	9'-9"	590
V4	37	#4	STR	8'-8"	214

REINFORCING STEEL = 9048 LBS

CLASS A CONCRETE BREAKDOWN

POUR #1	CAP, LOWER PART OF WINGS, & COLLARS	56.8 C.Y.
POUR #2	UPPER PART OF WINGS, & BACKWALL	16.9 C.Y.
TOTAL CLASS A CONCRETE		73.7 C.Y.

HP 12 X 53 STEEL PILES:
NO. 11 330 LIN. FT.

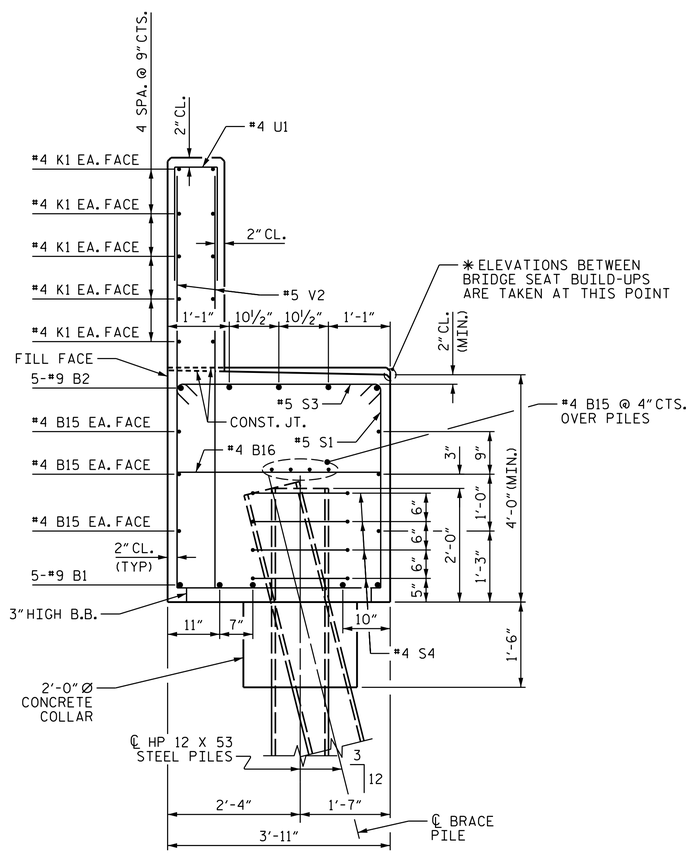

SECTION A-A

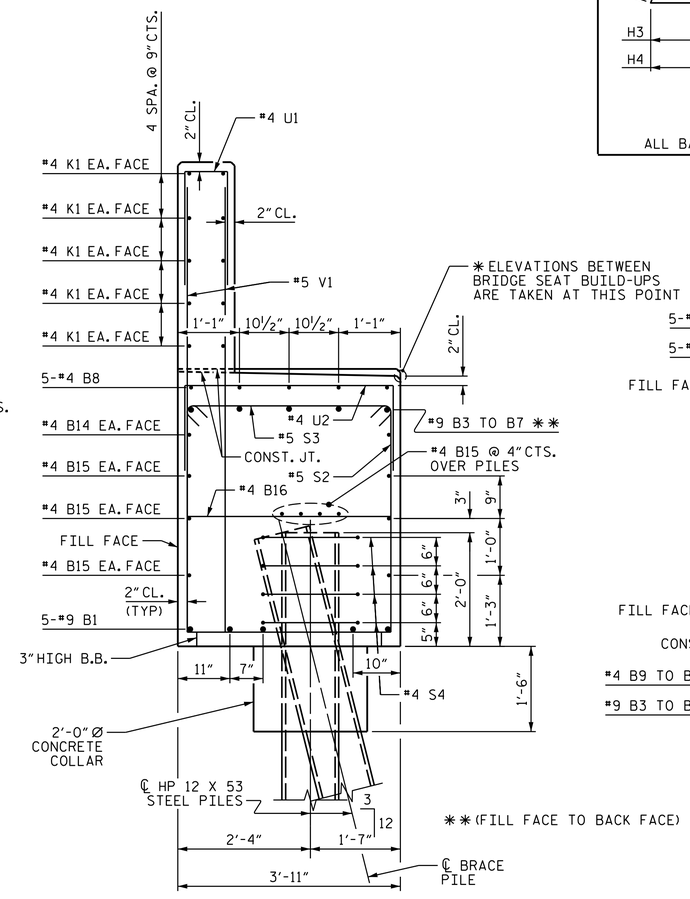

SECTION C-C

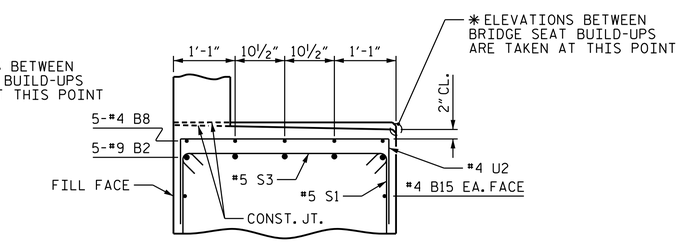

SECTION B-B

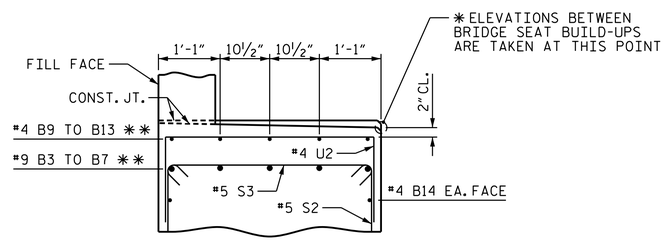

SECTION D-D

PROJECT NO. I-0914BB
WARREN COUNTY
STATION: 197+54.33 -L-

SHEET 3 OF 3

STATE OF NORTH CAROLINA
DEPARTMENT OF TRANSPORTATION
RALEIGH

SUBSTRUCTURE
END BENT #2

(NORTHBOUND LANE)

REVISIONS								SHEET NO.
NO.	BY:	DATE:	NO.	BY:	DATE:			S-67
1			3					TOTAL SHEETS
2			4					72

PLANS PREPARED BY:
Hatch Mott MacDonald
PO Box 700 Fuquay-Varina, NC 27526 (919) 552-2253 www.hatchmott.com
LICENSE NO. F-0669

NORTH CAROLINA PROFESSIONAL SEAL 20532 ENGINEER
DocuSigned by: JOHN E. MONDOLFI
9FD29B1FC2FB4D0... 10/17/2014

DRAWN BY: J. T. WILLIAMS DATE: 6-2014
CHECKED BY: J. E. MONDOLFI DATE: 6-2014
DESIGN ENGINEER OF RECORD: J. E. MONDOLFI DATE: 6-2014

w:\157077
R:\Structures_NBL\I0914BB_SMU_EB_NBL_02.dgn
9/11/2014 2:05:47 PM