DocuSign Envelope ID: 3F424BAB-583E-431A-81CE-1B677A5ACEC2

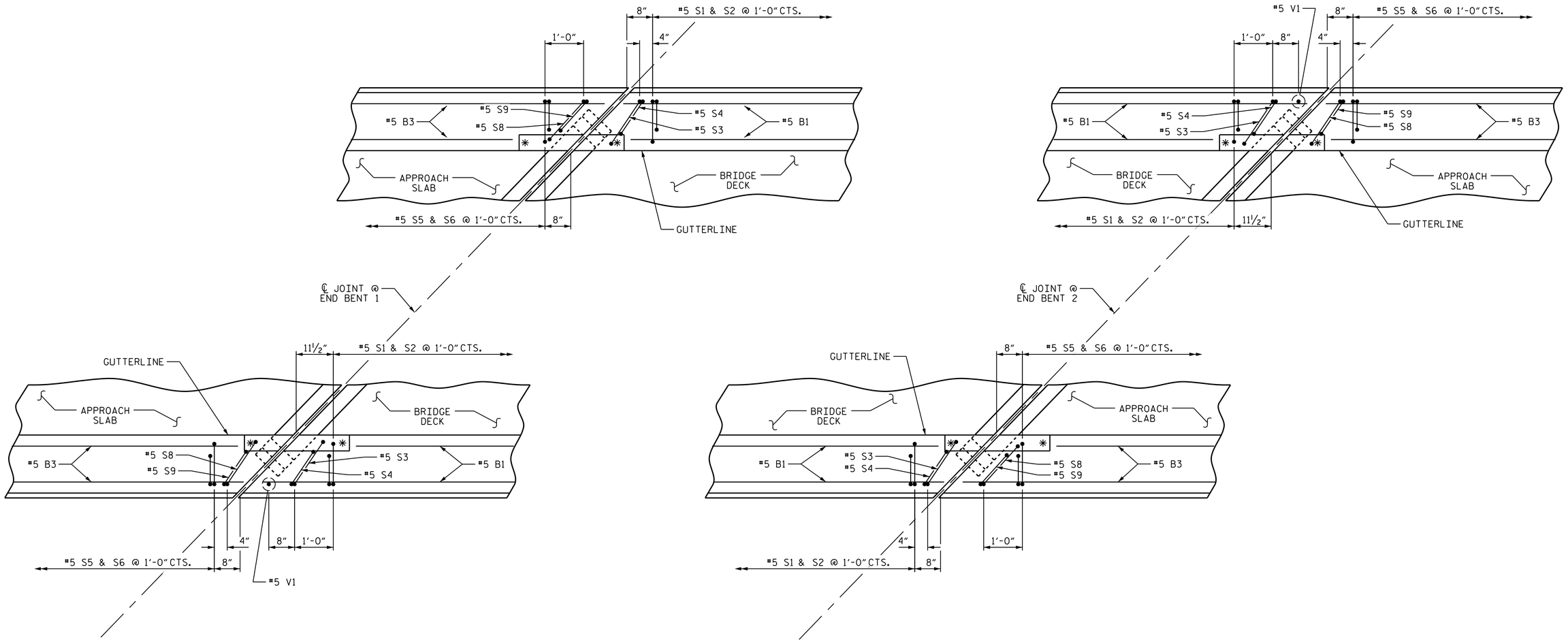

END OF RAIL DETAILS

✱ FOR RECESS DETAILS, SEE "EXPANSION JOINT SEAL DETAILS".

FOR COMPLETE DETAILS OF BARRIER RAILS ON APPROACH SLABS, SEE "BRIDGE APPROACH SLAB DETAILS".

PLACE THE SKEWED S3, S4, S8, AND S9 BARS ADJACENT TO EXPANSION JOINT AS BEST FIT ALONG THE JOINT MAINTAINING A MINIMUM 2" CL. TO EXPANSION JOINT BLOCKOUT OR COVER PLATE BLOCKOUT.

PROJECT NO. I-0914BB
WARREN COUNTY
STATION: 197+54.33 -L-

SHEET 2 OF 2

STATE OF NORTH CAROLINA
DEPARTMENT OF TRANSPORTATION
RALEIGH

CONCRETE BARRIER RAIL

(NORTHBOUND LANE)

REVISIONS						SHEET NO.
NO.	BY:	DATE:	NO.	BY:	DATE:	S-55
1			3			TOTAL SHEETS
2			4			72

PLANS PREPARED BY:
Hatch Mott MacDonald
PO Box 700
Fuquay-Varina, NC 27526
(919) 552-2253
www.hatchmott.com
LICENSE NO. F-0669

NORTH CAROLINA PROFESSIONAL SEAL 20532 ENGINEER
J. E. MONDOLFI
9FD29B1F2F8A0D... 10/17/2014

DRAWN BY:	J. T. WILLIAMS	DATE:	4-2014
CHECKED BY:	J. E. MONDOLFI	DATE:	4-2014
DESIGN ENGINEER OF RECORD:	J. E. MONDOLFI	DATE:	4-2014

w157077
R:\Structures_NBL\I0914BB_SMU_BR_NBL_02.dgn
10/17/2014 9:00:35 AM