DocuSign Envelope ID: 092FF86A-FF9F-4A0F-BAC7-07FE7A3BD109

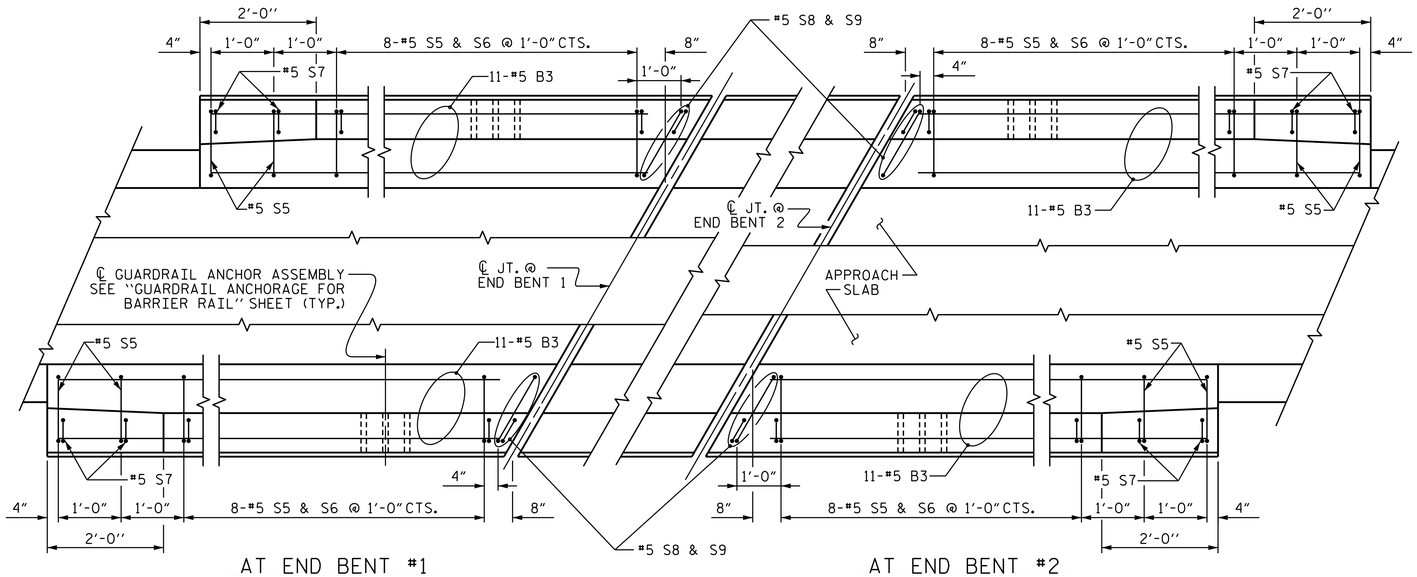

AT END BENT #1

AT END BENT #2

PLAN OF BARRIER RAIL

BILL OF MATERIAL					
BARRIER RAIL ONLY					
BAR	NO.	SIZE	TYPE	LENGTH	WEIGHT
✱B3	44	#5	STR	9'-8"	444
✱S5	40	#5	1	5'-1"	212
✱S6	32	#5	2	7'-0"	234
✱S7	8	#5	2	5'-6"	46
✱S8	4	#5	1	5'-4"	22
✱S9	4	#5	2	7'-2"	30
✱EPOXY COATED REINFORCING STEEL				LBS.	988
CLASS AA CONCRETE				C.Y.	5.8
CONCRETE BARRIER RAIL				42.90	LIN. FT.

BAR TYPES

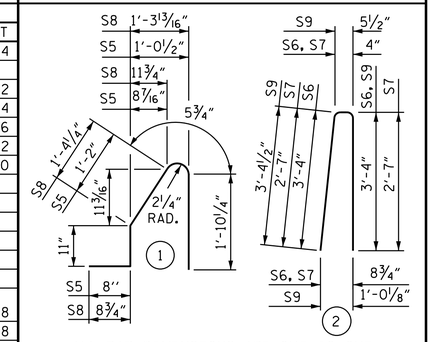

ALL BAR DIMENSIONS ARE OUT TO OUT

NOTES

THE COST OF THE BARRIER RAIL ON THE APPROACH SLAB SHALL BE INCLUDED IN THE LINEAR FOOT CONTRACT PRICE BID FOR "CONCRETE BARRIER RAIL".

THE BARRIER RAIL ON EACH APPROACH SLAB SHALL NOT BE CAST UNTIL ALL APPROACH SLAB CONCRETE HAS BEEN CAST AND HAS REACHED A MINIMUM COMPRESSIVE STRENGTH OF 3,000 PSI.

ALL REINFORCING STEEL IN BARRIER RAILS SHALL BE EPOXY COATED.

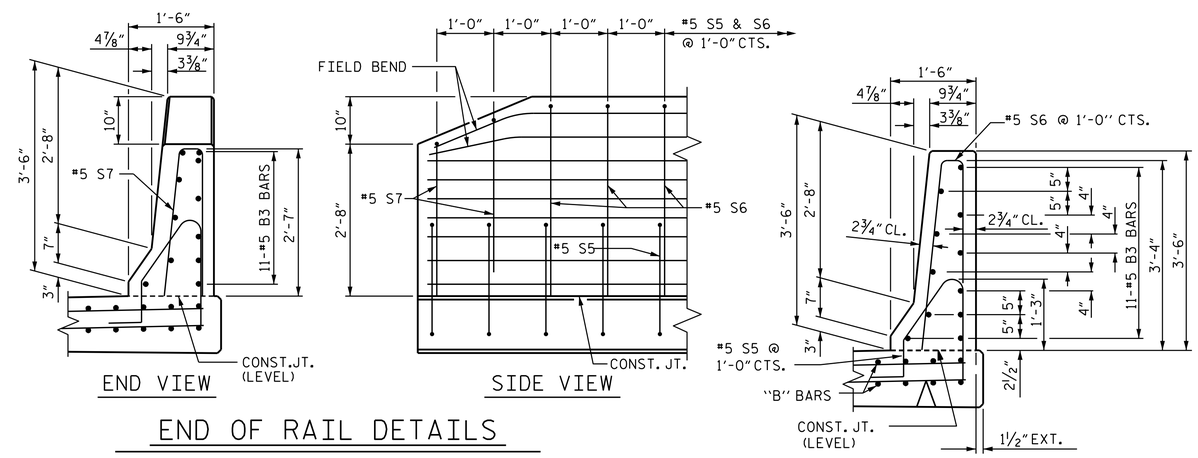

END VIEW

SIDE VIEW

END OF RAIL DETAILS

SECTION THRU RAIL

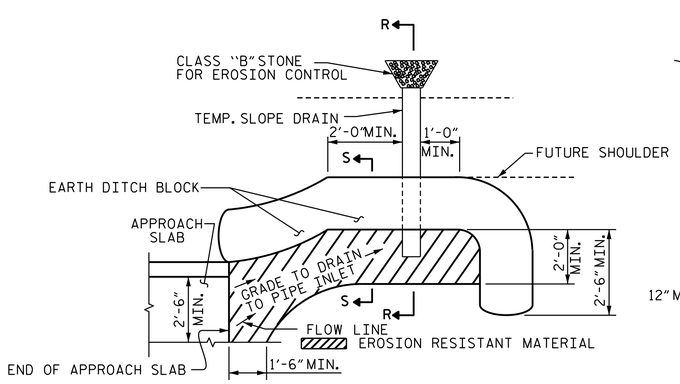

NOTE: IMMEDIATELY AFTER THE CONSTRUCTION OF THE APPROACH SLAB, THE CONTRACTOR SHALL PROVIDE TEMPORARY BERM AND SLOPE DRAIN. CONTRACTOR SHALL GRADE TO PIPE INLET AND PROVIDE EROSION RESISTANT MATERIAL AS SHOWN. THE EROSION RESISTANT MATERIAL SHALL BE EITHER 1) ASPHALT PLANT MIX, TYPE 1 OR TYPE 2, MIN. 2" DEPTH, 2) EROSION CONTROL MAT, OR 3) CONCRETE, AS DIRECTED BY THE ENGINEER. THE SLOPE DRAIN SHALL CONSIST OF A NON-PERFORATED TEMPORARY DRAINAGE PIPE, 12 INCHES IN DIAMETER.

PLAN VIEW

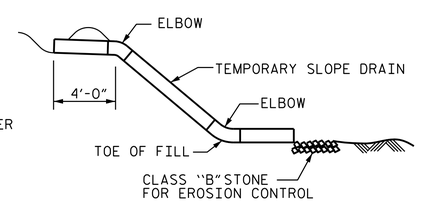

SECTION R-R

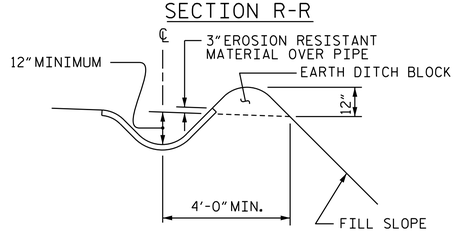

SECTION S-S

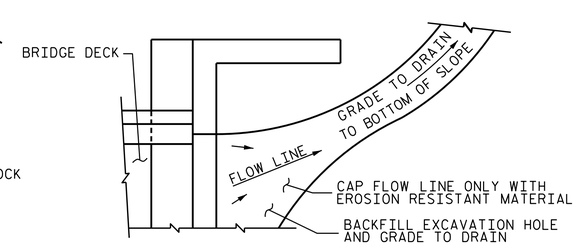

NOTE: IF THE APPROACH SLAB IS NOT CONSTRUCTED IMMEDIATELY AFTER THE BACKFILLING OF THE END BENT EXCAVATION, GRADE TO DRAIN TO THE BOTTOM OF THE SLOPE AND PROVIDE EROSION RESISTANT MATERIAL, SUCH AS FIBERGLASS ROVING OR AS DIRECTED BY THE ENGINEER TO PREVENT SOIL EROSION AND TO PROTECT THE AREA ADJACENT TO THE STRUCTURE. THE CONTRACTOR WILL BE REQUIRED TO REMOVE THESE MATERIALS PRIOR TO CONSTRUCTION OF THE APPROACH SLAB.

TEMPORARY DRAINAGE DETAIL

TEMPORARY BERM AND SLOPE DRAIN DETAILS

(TO BE USED WHEN SHOULDER BERM GUTTER IS REQUIRED)

PROJECT NO. I-0914BB
WARREN COUNTY
STATION: 197+54.33 -L-

SHEET 3 OF 4

STATE OF NORTH CAROLINA
DEPARTMENT OF TRANSPORTATION
RALEIGH

BRIDGE APPROACH SLAB DETAILS

(SOUTHBOUND LANE)

REVISIONS						SHEET NO.
NO.	BY:	DATE:	NO.	BY:	DATE:	S-35
1			3			TOTAL SHEETS
2			4			72

PLANS PREPARED BY:
Hatch Mott MacDonald
PO Box 700 Fuquay-Varina, NC 27526 (919) 552-2253 www.hatchmott.com
LICENSE NO. F-0669

NORTH CAROLINA PROFESSIONAL SEAL 20532 ENGINEER
J. E. MONDOLFI
9FD29B1FC2FB4DD... 10/17/2014

DRAWN BY:	J. T. WILLIAMS	DATE:	7-2014
CHECKED BY:	J. E. MONDOLFI	DATE:	7-2014
DESIGN ENGINEER OF RECORD:	J. E. MONDOLFI	DATE:	7-2014

w157077
R:\Structures_SBL\I0914BB_SMU_AS_SBL_01.dgn
9/11/2014 2:03:49 PM