DocuSign Envelope ID: 3F424BAB-583E-431A-81CE-1B677A5ACEC2

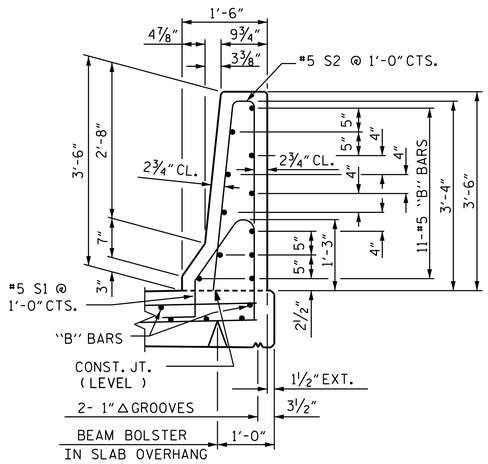

SECTION THRU RAIL

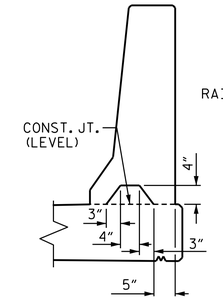

SECTION S-S

AT DAM IN OPEN JOINT
(THIS IS TO BE USED ONLY WHEN SLIP FORM IS USED)

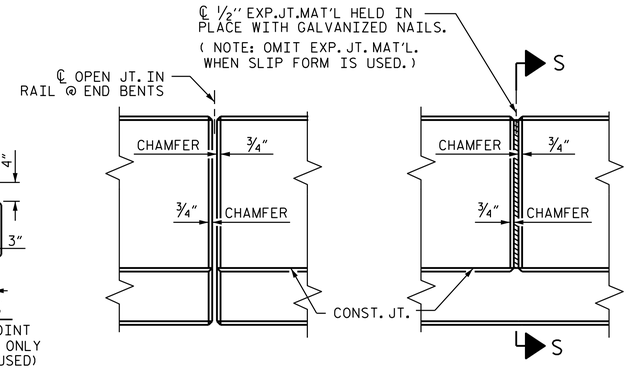

ELEVATION AT EXPANSION JOINTS

BARRIER RAIL DETAILS

BILL OF MATERIAL

FOR CONCRETE BARRIER RAIL ONLY

BAR	NO.	SIZE	TYPE	LENGTH	WEIGHT
* B1	88	#5	STR	14'-7"	1339
* B2	110	#5	STR	26'-3"	3012
* S1	362	#5	1	4'-8"	1762
* S2	362	#5	2	7'-0"	2643
* S3	4	#5	1	4'-11"	21
* S4	4	#5	2	7'-2"	30
* V1	2	#5	STR	3'-10"	8

* EPOXY COATED REINFORCING STEEL	8815 LBS.
CLASS AA CONCRETE	49.9 CU. YDS.
** CONCRETE BARRIER RAIL	366.15 LIN. FT.

BAR TYPES

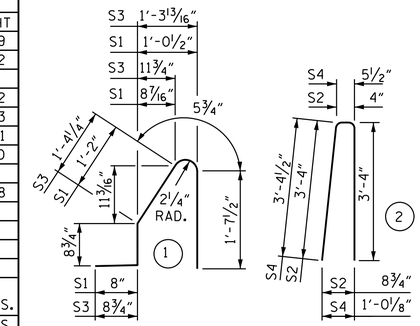

ALL BAR DIMENSIONS ARE OUT TO OUT

** DOES NOT INCLUDE BARRIER RAIL ON APPROACH SLABS.

NOTES

BARRIER RAIL IN A CONTINUOUS UNIT SHALL NOT BE CAST UNTIL ALL SLAB CONCRETE IN THE UNIT HAS BEEN CAST AND HAS REACHED A MINIMUM COMPRESSIVE STRENGTH OF 3,000 PSI.

ALL REINFORCING STEEL IN BARRIER RAILS SHALL BE EPOXY COATED.

GROOVED CONTRACTION JOINTS, 1/2" IN DEPTH, SHALL BE TOOLED IN ALL EXPOSED FACES OF THE BARRIER RAIL AND IN ACCORDANCE WITH ARTICLE 825-10(B) OF THE STANDARD SPECIFICATIONS. THE CONTRACTION JOINT SHALL BE LOCATED AT EACH THIRD POINT BETWEEN BARRIER RAIL EXPANSION JOINTS. ONLY ONE CONTRACTION JOINT IS REQUIRED AT MIDPOINT OF BARRIER RAIL SEGMENTS LESS THAN 20 FEET IN LENGTH AND NO CONTRACTION JOINTS ARE REQUIRED FOR THOSE SEGMENTS LESS THAN 10 FEET IN LENGTH.

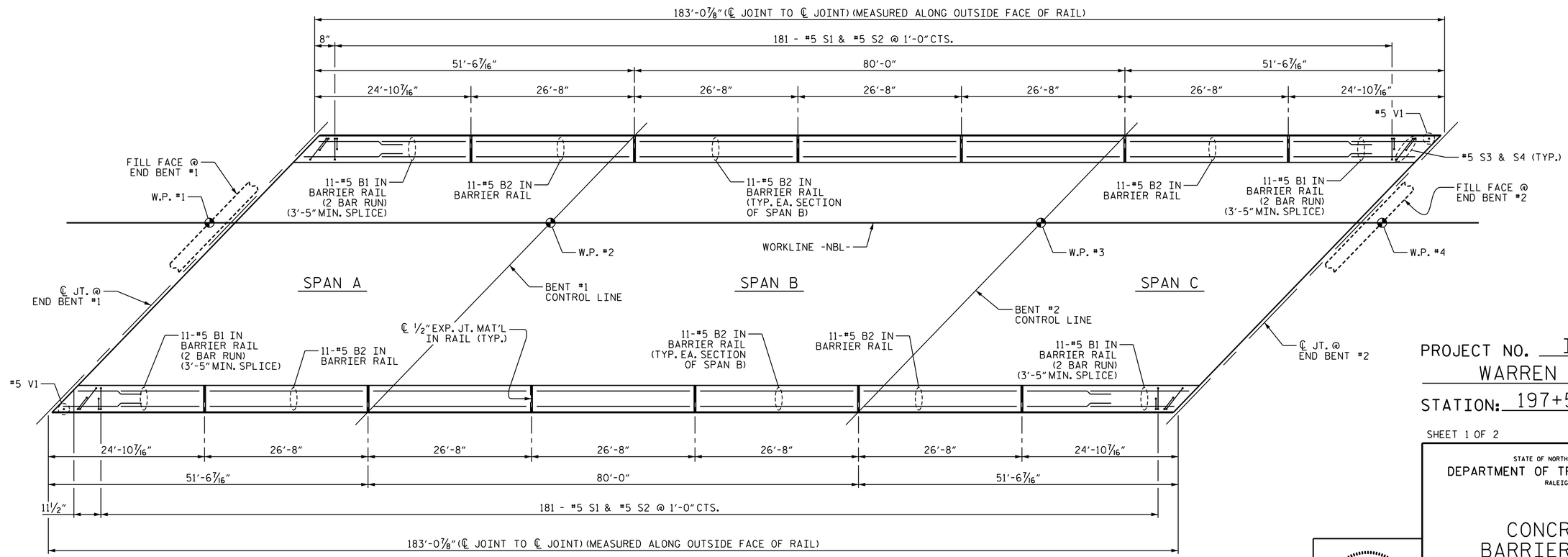

PLAN OF BARRIER RAIL

FOR REINFORCING STEEL DETAILS AT ENDS OF BARRIER RAIL, SEE "END OF RAIL DETAILS" SHEET 2 OF 2

PROJECT NO. I-0914BB
WARREN COUNTY
STATION: 197+54.33 -L-

SHEET 1 OF 2

STATE OF NORTH CAROLINA
DEPARTMENT OF TRANSPORTATION
RALEIGH

CONCRETE BARRIER RAIL

(NORTHBOUND LANE)

REVISIONS								SHEET NO.
NO.	BY:	DATE:	NO.	BY:	DATE:			S-54
1			3					TOTAL SHEETS
2			4					72

DRAWN BY: J. T. WILLIAMS DATE: 4-2014
CHECKED BY: J. E. MONDOLFI DATE: 4-2014
DESIGN ENGINEER OF RECORD: J. E. MONDOLFI DATE: 4-2014

PLANS PREPARED BY:
Hatch Mott MacDonald
PO Box 700
Fuquay-Varina, NC 27526
(919) 552-2253
www.hatchmott.com
LICENSE NO. F-0669

NORTH CAROLINA PROFESSIONAL SEAL 20532 ENGINEER JOHN E. MONDOLFI
DocuSigned by: JOHN E. MONDOLFI
9FD29B1FC2FB4D0... 10/17/2014

w:\157077 R:\Structures_NBL\I0914BB_SMU_BR_NBL_02.dgn 9/11/2014 2:04:53 PM