DocuSign Envelope ID: 3F424BAB-583E-431A-81CE-1B677A5ACEC2

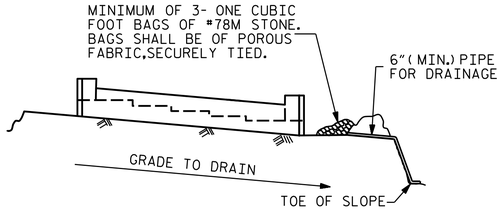

BAGGED STONE AND PIPE SHALL BE PLACED IMMEDIATELY AFTER COMPLETION OF END BENT EXCAVATION. PIPE MAY BE EITHER CONCRETE, CORRUGATED STEEL, CORRUGATED ALUMINUM ALLOY, OR CORRUGATED PLASTIC. PERFORATED PIPE WILL NOT BE ALLOWED.

BAGGED STONE SHALL REMAIN IN PLACE UNTIL THE ENGINEER DIRECTS THAT IT BE REMOVED. THE CONTRACTOR SHALL REMOVE AND DISPOSE OF SILT ACCUMULATIONS AT BAGGED STONE WHEN SO DIRECTED BY THE ENGINEER. BAGS SHALL BE REMOVED AND REPLACED WHENEVER THE ENGINEER DETERMINES THAT THEY HAVE DETERIORATED AND LOST THEIR EFFECTIVENESS.

NO SEPARATE PAYMENT WILL BE MADE FOR THIS WORK AND THE ENTIRE COST OF THIS WORK SHALL BE INCLUDED IN THE UNIT CONTRACT PRICE BID FOR THE SEVERAL PAY ITEMS.

TEMPORARY DRAINAGE AT END BENT

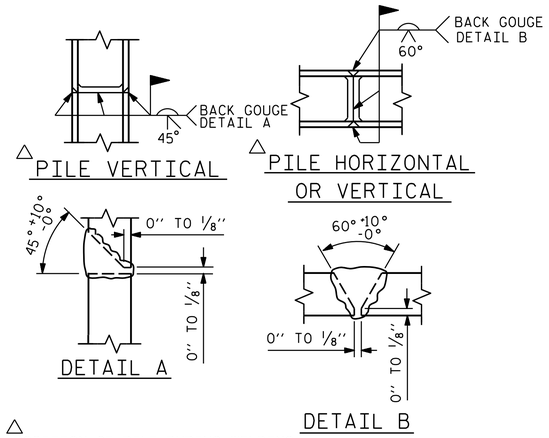

△ POSITION OF PILE DURING WELDING.

PILE SPLICE DETAILS

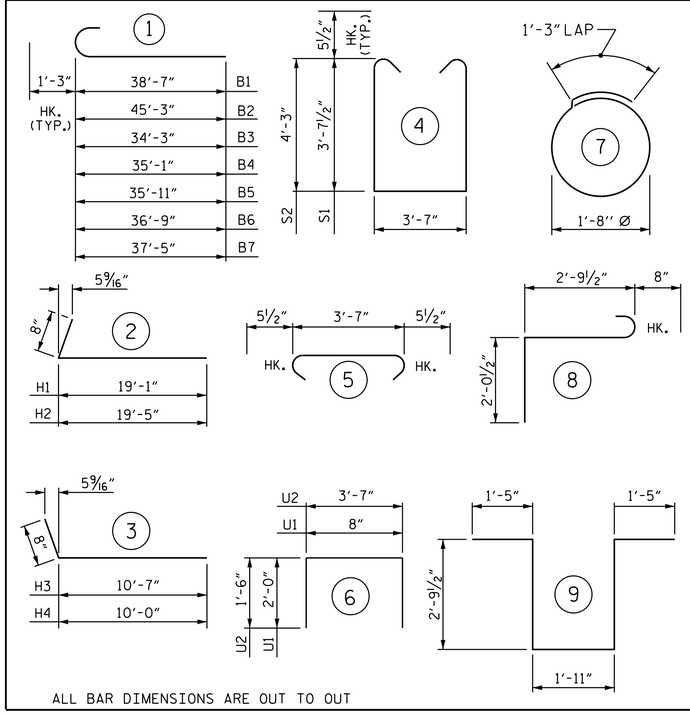

BILL OF MATERIAL

END BENT 1

BAR	NO.	SIZE	TYPE	LENGTH	WEIGHT
B1	10	#9	1	39'-10"	1354
B2	5	#9	1	46'-6"	791
B3	1	#9	1	35'-6"	121
B4	1	#9	1	36'-4"	124
B5	1	#9	1	37'-2"	126
B6	1	#9	1	38'-0"	129
B7	1	#9	1	38'-8"	131
B8	10	#4	STR	13'-4"	89
B9	1	#4	STR	7'-8"	5
B10	1	#4	STR	8'-5"	6
B11	1	#4	STR	9'-3"	6
B12	1	#4	STR	10'-1"	7
B13	1	#4	STR	10'-9"	7
B14	2	#4	STR	28'-0"	37
B15	30	#4	STR	25'-3"	506
B16	17	#4	STR	3'-7"	41
H1	12	#4	2	19'-9"	158
H2	12	#4	2	20'-1"	161
H3	13	#5	3	11'-3"	153
H4	13	#5	3	10'-8"	145
K1	30	#4	STR	25'-3"	506
K2	6	#4	STR	3'-7"	14
K3	2	#4	STR	3'-5"	5
S1	32	#5	4	11'-9"	392
S2	33	#5	4	13'-0"	447
S3	65	#5	5	4'-6"	305
S4	40	#4	7	6'-6"	174
S5	3	#6	8	5'-6"	25
S6	3	#6	9	10'-4"	47
U1	63	#4	6	4'-8"	196
U2	24	#4	6	6'-7"	106
V1	42	#5	STR	8'-2"	358
V2	42	#5	STR	7'-8"	336
V3	42	#5	STR	7'-2"	314
V4	48	#5	STR	9'-10"	492
V5	30	#4	STR	8'-5"	169

REINFORCING STEEL = 7983 LBS

CLASS A CONCRETE BREAKDOWN

POUR #1	CAP, LOWER PART OF WINGS, & COLLARS	54.8 C.Y.
POUR #2	UPPER PART OF WINGS, & BACKWALL	14.9 C.Y.
TOTAL CLASS A CONCRETE		69.7 C.Y.

HP 12 X 53 STEEL PILES:
NO. 11 660 LIN. FT.

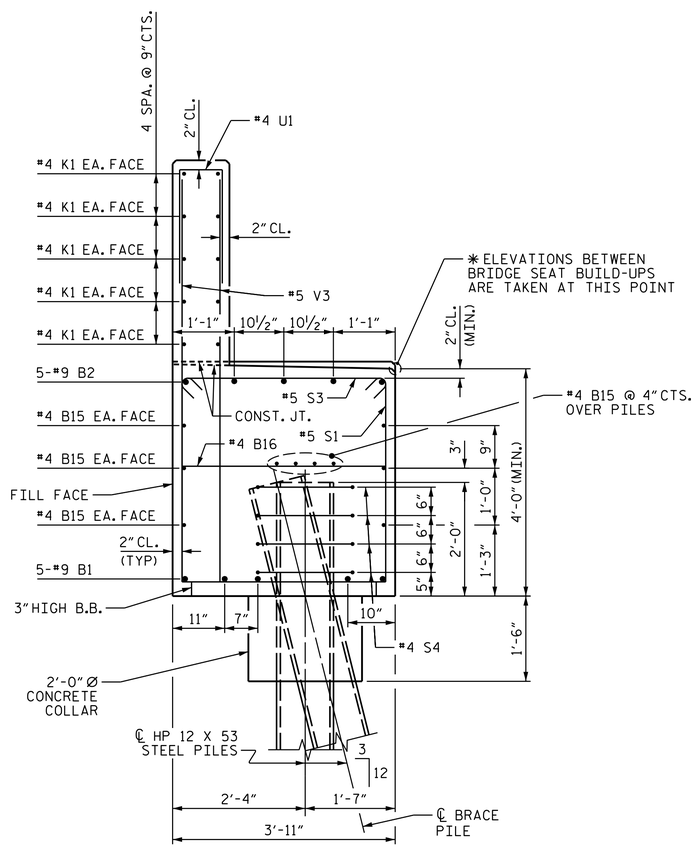

SECTION A-A

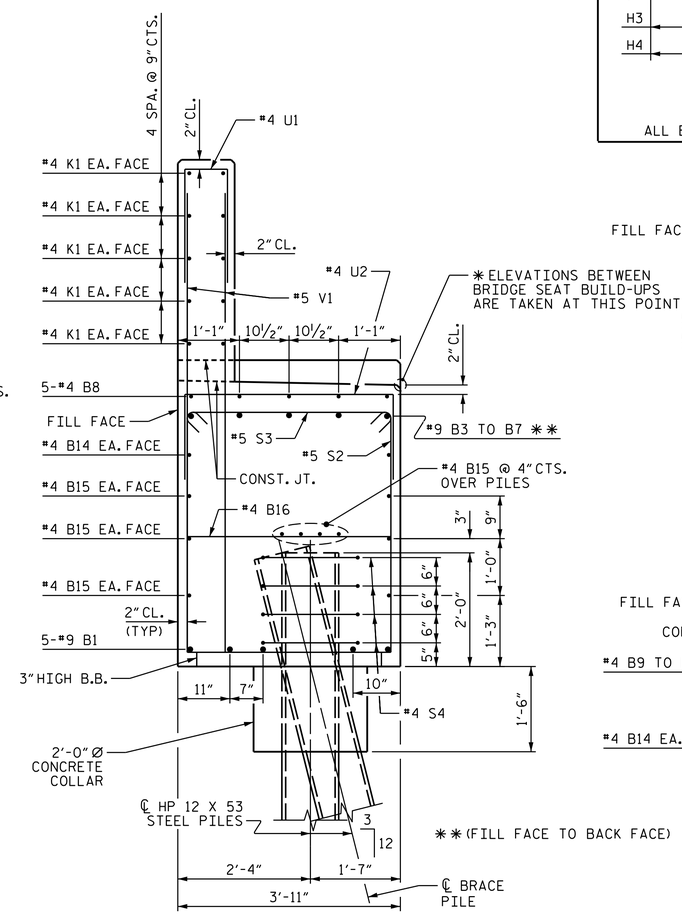

✱✱ (FILL FACE TO BACK FACE)

SECTION C-C

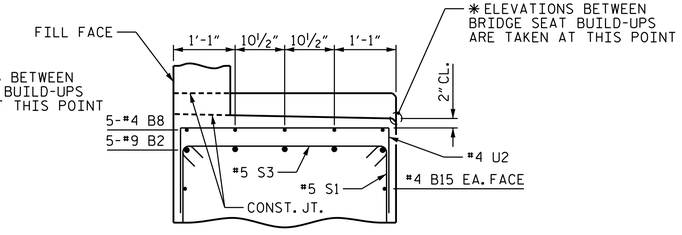

SECTION B-B

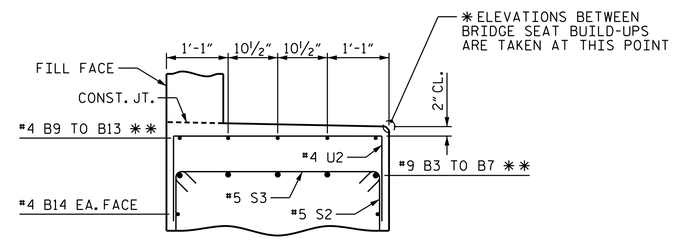

SECTION D-D

PROJECT NO. I-0914BB
WARREN COUNTY
STATION: 197+54.33 -L-

SHEET 3 OF 3

STATE OF NORTH CAROLINA
DEPARTMENT OF TRANSPORTATION
RALEIGH

SUBSTRUCTURE
END BENT #1

(NORTHBOUND LANE)

REVISIONS							SHEET NO.
NO.	BY:	DATE:	NO.	BY:	DATE:		S-60
1			3				TOTAL SHEETS
2			4				72

PLANS PREPARED BY:
Hatch Mott MacDonald
PO Box 700 Fuquay-Varina, NC 27526 (919) 552-2253 www.hatchmott.com
LICENSE NO. F-0669

NORTH CAROLINA PROFESSIONAL SEAL 20532 ENGINEER JAMES E. MONDOLFI
9FD29B1FC2FB4D0 · 10/17/2014

DRAWN BY: J. T. WILLIAMS DATE: 5-2014
CHECKED BY: J. E. MONDOLFI DATE: 5-2014
DESIGN ENGINEER OF RECORD: J. E. MONDOLFI DATE: 5-2014

w157077
R:\Structures_NBL\I0914BB_SMU_EB_NBL_02.dgn
9/11/2014 2:05:17 PM