DocuSign Envelope ID: 092FF86A-FF9F-4A0F-BAC7-07FE7A3BD109

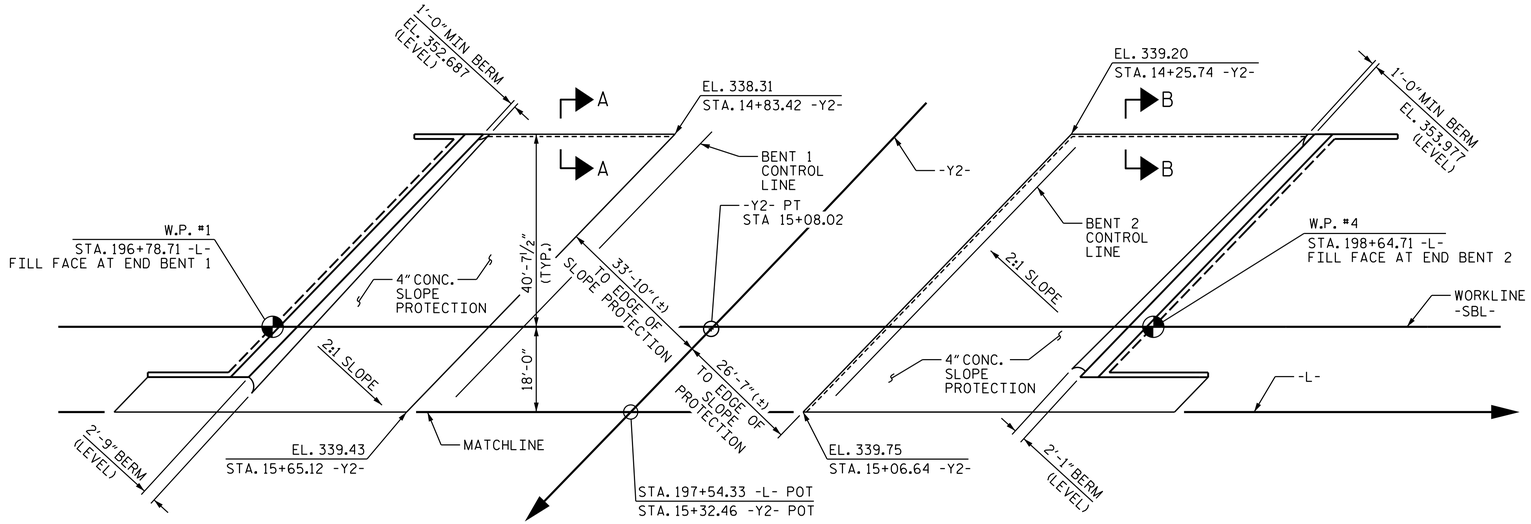

PLAN

THE GROUND LINE ELEVATIONS FOR THE TOE OF SLOPE PROTECTION IS FROM THE BEST INFORMATION AVAILABLE. THE SPECIFIC GROUND LINE ELEVATIONS SHOULD BE DETERMINED PRIOR TO SLOPE PROTECTION CONSTRUCTION.

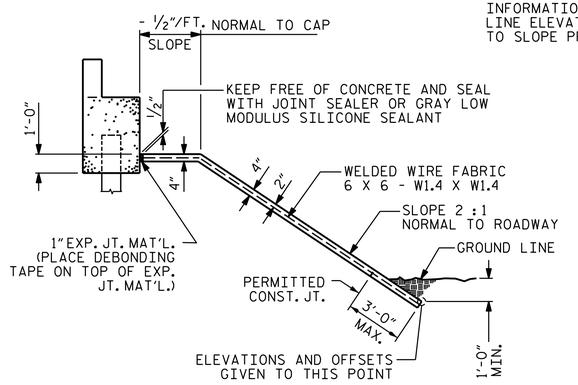

SECTION ALONG ℄ ROADWAY WHEN DITCH IS NOT PROVIDED

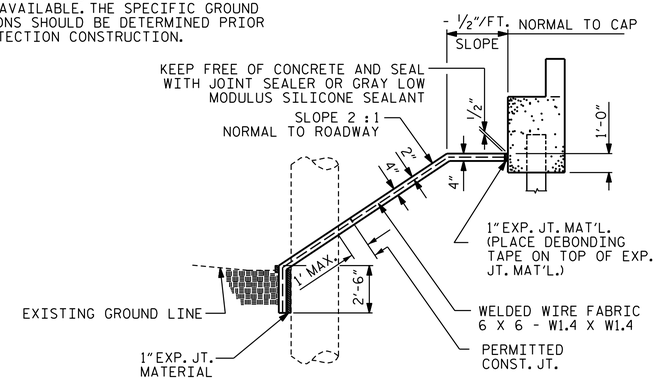

SECTION ALONG ℄ ROADWAY WITH SHOULDER PIER

DETAILS FOR ALTERNATE A

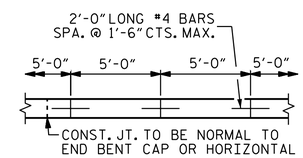

STRIP WIDTHS MAY VARY IN CURVED PORTION.

POURING DETAIL

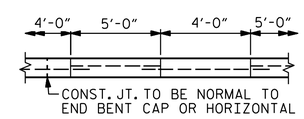

POUR A 4'-0" STRIP FIRST. STRIP WIDTHS MAY VARY IN CURVED PORTION.

OPTIONAL POURING DETAIL

NOTES

SLOPE PROTECTION SHALL BE PLACED UNDER THE ENDS OF THE BRIDGE AS SHOWN IN THE DETAILS. THE CONTRACTOR, AT HIS OPTION, MAY USE ALTERNATE "B" ONLY FOR HIGHWAY OVER HIGHWAY GRADE SEPARATIONS WITH 2:1 END BENT SLOPE IN RURAL, UNPOPULATED AREAS. STRAIGHT EDGING WILL NOT BE REQUIRED UNLESS, IN THE OPINION OF THE ENGINEER, VISUAL INSPECTION INDICATES A NEED FOR IT. MEASUREMENT AND PAYMENT SHALL BE AS PRESCRIBED IN SECTION 462 OF THE STANDARD SPECIFICATIONS. FOR BERM WIDTH, SEE GENERAL DRAWING.

ALTERNATE "A" SHALL CONSIST OF 4" POURED-IN-PLACE CONCRETE PAVING AS SHOWN IN THE DETAILS ON THIS SHEET. CONCRETE SHALL BE CLASS "B". THE CONCRETE SURFACE SHALL BE FLOATED WITH A WOODEN FLOAT AND FINISHED. WELDED WIRE FABRIC REINFORCING SHALL BE 6 X 6 - W1.4 X W1.4, 60" WIDE. SLOPE PROTECTION SHALL BE POURED IN 5' STRIPS AS SHOWN IN THE "POURING DETAIL" WITH 2'-0" LONG #4 BARS PLACED ALONG THE SLOPE BETWEEN STRIPS AT 1'-6" MAXIMUM SPACING. SLOPE PROTECTION MAY BE POURED IN ALTERNATE 4' AND 5' STRIPS AS SHOWN IN THE "OPTIONAL POURING DETAIL" WITH ADJACENT RUNS OF WELDED WIRE FABRIC LAPPING AT LEAST 6". THE COST OF THE WELDED WIRE FABRIC AND #4 BARS, IF USED, SHALL BE INCLUDED IN THE CONTRACT UNIT PRICE BID PER SQUARE YARD FOR SLOPE PROTECTION.

ALTERNATE "B" SHALL CONSIST OF A COMBINATION CONCRETE SLAB AND STONE SLOPE PROTECTION. THE CONCRETE PORTIONS SHALL CONSIST OF PAVED STRIPS ALONG THE DITCH AS SHOWN IN THE DETAILS. GEOTEXTILE FOR DRAINAGE AND 8" OF STONE SHALL BE PLACED OVER THE REMAINING AREA SHOWN ON THE PLANS TO BE COVERED WITH SLOPE PROTECTION. CONCRETE SHALL BE CLASS "B". THE COST OF THE CONCRETE, GEOTEXTILE FOR DRAINAGE, STONE AND WELDED WIRE FABRIC 6 X 6 - W1.4 X W1.4, SHALL BE INCLUDED IN THE CONTRACT UNIT PRICE BID PER SQUARE YARD FOR SLOPE PROTECTION. SUBGRADING, STONE TYPE, STONE SIZING, AND HERBICIDE PROTECTION, SHALL BE IN ACCORDANCE WITH THE STANDARD SPECIFICATIONS EXCEPT THE HERBICIDE TYPE SHALL BE SUBMITTED TO THE ENGINEER FOR APPROVAL PRIOR TO APPLICATION.

BRIDGE @ STA. 197+54.33 -L-	4 INCH SLOPE PROTECTION	* WELDED WIRE FABRIC 60 INCHES WIDE	(ALTERNATE "B") GEOTEXTILE FOR DRAINAGE
	SQUARE YARDS	APPROX. L.F.	SQUARE YARDS
END BENT 1	316	570	332
END BENT 2	411	730	365

* QUANTITY SHOWN IS BASED ON 5' POURS.

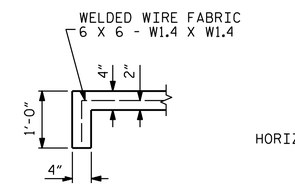

SECTION A-A

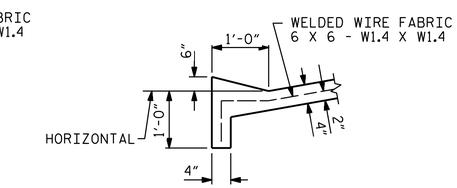

SECTION B-B

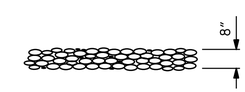

SECTION A-A

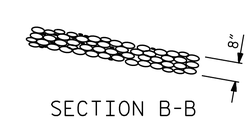

SECTION B-B

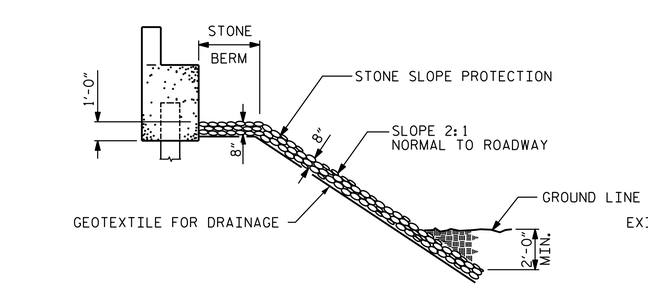

SECTION ALONG ℄ ROADWAY WHEN DITCH IS NOT PROVIDED

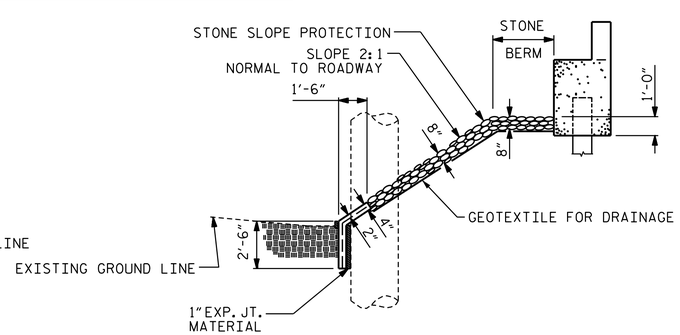

SECTION ALONG ℄ ROADWAY WITH SHOULDER PIER

DETAILS FOR ALTERNATE B

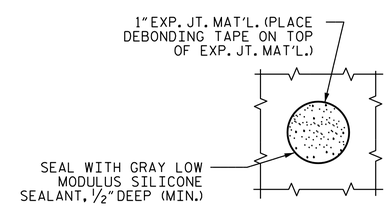

PLAN WHERE CONCRETE SLOPE PROTECTION MUST BE PLACED AROUND A BENT COLUMN

PROJECT NO. I-0914BB
WARREN COUNTY
STATION: 197+54.33 -L-

STATE OF NORTH CAROLINA
DEPARTMENT OF TRANSPORTATION
RALEIGH

SLOPE PROTECTION DETAILS

(SOUTHBOUND LANE)

REVISIONS								SHEET NO.
NO.	BY:	DATE:	NO.	BY:	DATE:			S-32
1			3					TOTAL SHEETS
2			4					72

PLANS PREPARED BY:
Hatch Mott MacDonald
PO Box 700
Fuquay-Varina, NC 27526
(919) 552-2253
www.hatchmott.com
LICENSE NO. F-0669

NORTH CAROLINA PROFESSIONAL SEAL 20532 ENGINEER
JOHN E. MONDOLFI
9FD29B1FC2FB4D0... 10/17/2014

DRAWN BY:	N.J. MACHAK	DATE:	7-2014
CHECKED BY:	J.T. WILLIAMS	DATE:	7-2014
DESIGN ENGINEER OF RECORD:	J.E. MONDOLFI	DATE:	7-2014

w157077
R:\Structures_SBL\I0914BB_SMU_SP_SBL_01.dgn
10/16/2014 9:40:21 AM