DocuSign Envelope ID: 3F424BAB-583E-431A-81CE-1B677A5ACEC2

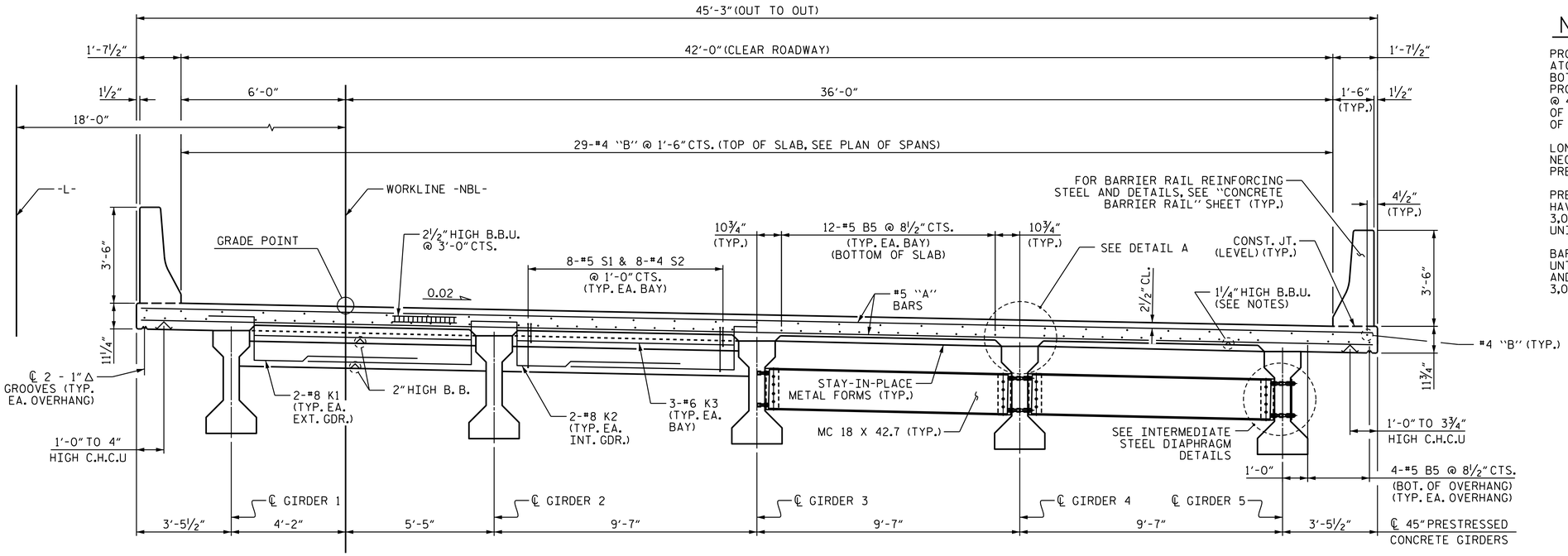

HALF TYPICAL SECTION

SHOWING END BENT DIAPHRAGMS

HALF TYPICAL SECTION

SHOWING INTERMEDIATE DIAPHRAGMS

NOTES:

PROVIDE 1¼" HIGH BEAM BOLSTERS UPPER AT 4'-0" CTS. ATOP THE METAL STAY-IN-PLACE FORMS TO SUPPORT THE BOTTOM MAT OF 'A' BARS. WHEN USING REMOVABLE FORMS, PROVIDE CONTINUOUS HIGH CHAIRS FOR METAL DECK (C.H.C.M.) @ 4'-0" CTS. WITH A HEIGHT TO SUPPORT THE BOTTOM MAT OF 'A' BARS A CLEAR DISTANCE OF 2½" ABOVE THE TOP OF THE REMOVABLE FORM.

LONGITUDINAL STEEL MAY BE SHIFTED SLIGHTLY, AS NECESSARY, TO AVOID INTERFERENCE WITH STIRRUPS IN PRESTRESSED CONCRETE GIRDERS.

PREVIOUSLY CAST CONCRETE IN A CONTINUOUS UNIT SHALL HAVE ATTAINED A MINIMUM COMPRESSIVE STRENGTH OF 3,000 PSI BEFORE ADDITIONAL CONCRETE IS CAST IN THE UNIT.

BARRIER RAIL IN A CONTINUOUS UNIT SHALL NOT BE CAST UNTIL ALL SLAB CONCRETE IN THE UNIT HAS BEEN CAST AND HAS REACHED A MINIMUM COMPRESSIVE STRENGTH OF 3,000 PSI.

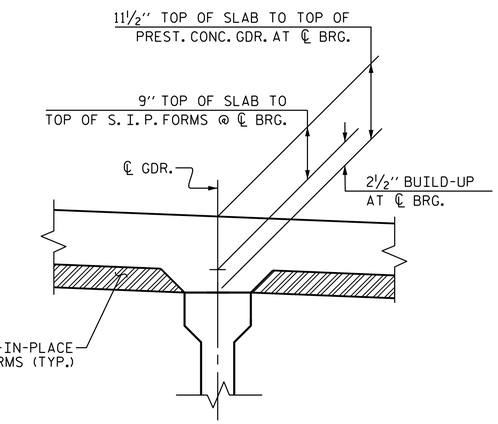

DETAIL A

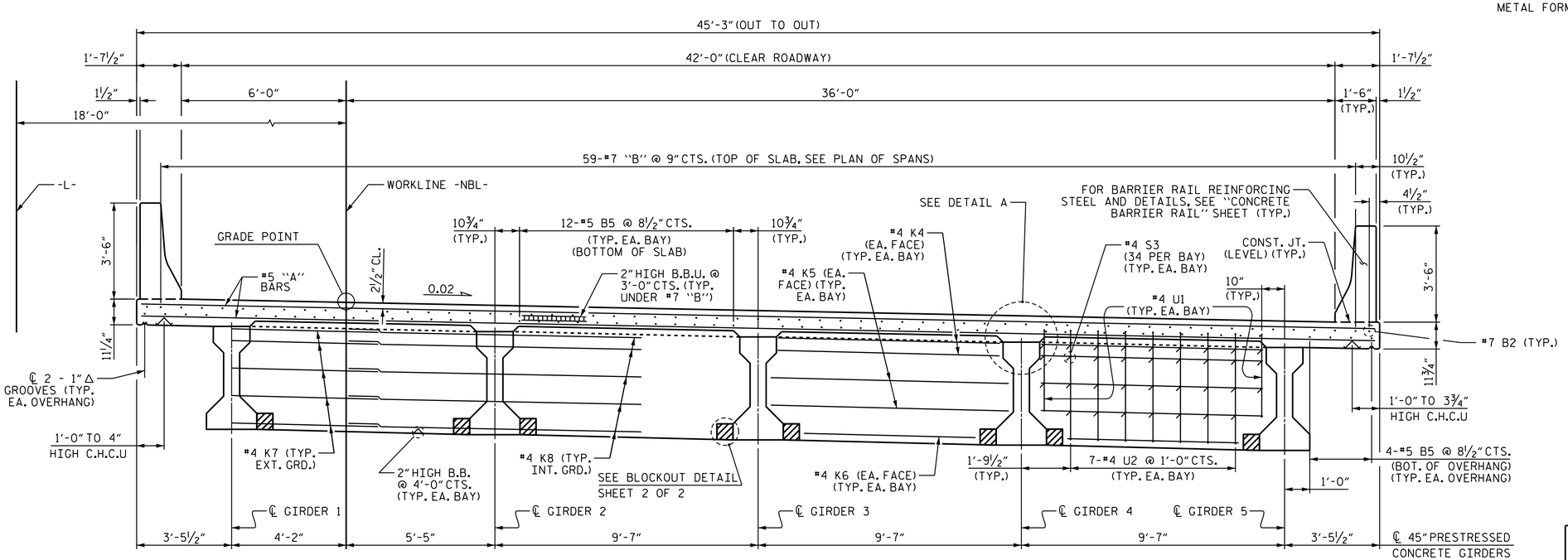

TYPICAL SECTION

SHOWING BENT DIAPHRAGMS

PROJECT NO. I-0914BB

WARREN COUNTY

STATION: 197+54.33 -L-

SHEET 1 OF 2

STATE OF NORTH CAROLINA
DEPARTMENT OF TRANSPORTATION
RALEIGH

SUPERSTRUCTURE

TYPICAL SECTIONS

(NORTHBOUND LANE)

REVISIONS						SHEET NO.
NO.	BY:	DATE:	NO.	BY:	DATE:	S-41
1			3			TOTAL SHEETS
2			4			72

PLANS PREPARED BY:
Hatch Mott MacDonald
PO Box 700 Fuquay-Varina, NC 27526 (919) 552-2253 www.hatchmott.com
LICENSE NO. F-0669

NORTH CAROLINA PROFESSIONAL SEAL 20532 ENGINEER
J. E. MONDOLFI
9FD29B1F02F8ADC 10/17/2014

DRAWN BY:	J. T. WILLIAMS	DATE:	3-2014
CHECKED BY:	J. E. MONDOLFI	DATE:	3-2014
DESIGN ENGINEER OF RECORD:	J. E. MONDOLFI	DATE:	3-2014

w157077
R:\Structures_NBL\I0914BB_SMU_TS_NBL_02.dgn
9/11/2014 2:04:12 PM