DocuSign Envelope ID: 092FF86A-FF9F-4A0F-BAC7-07FE7A3BD109

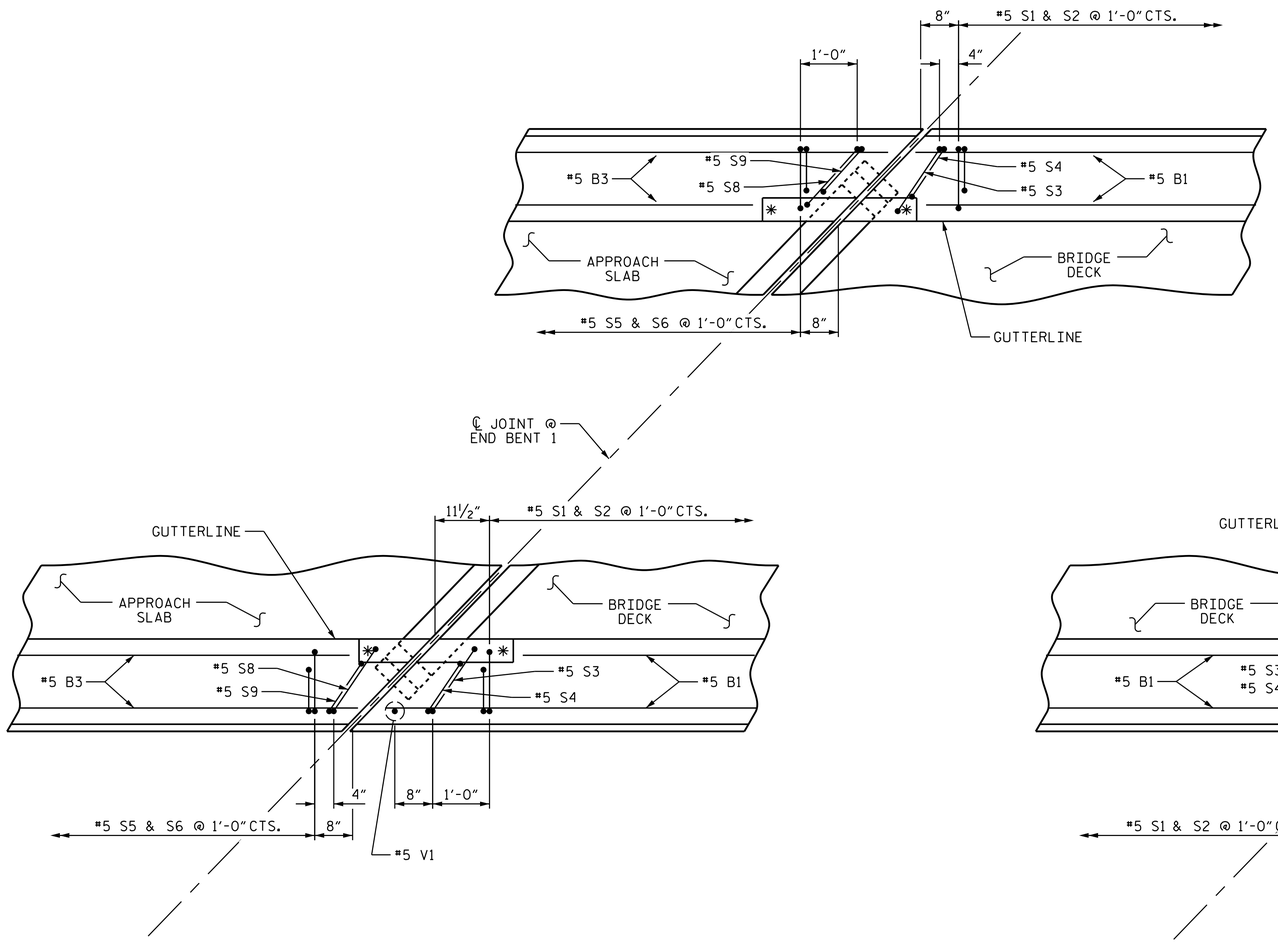

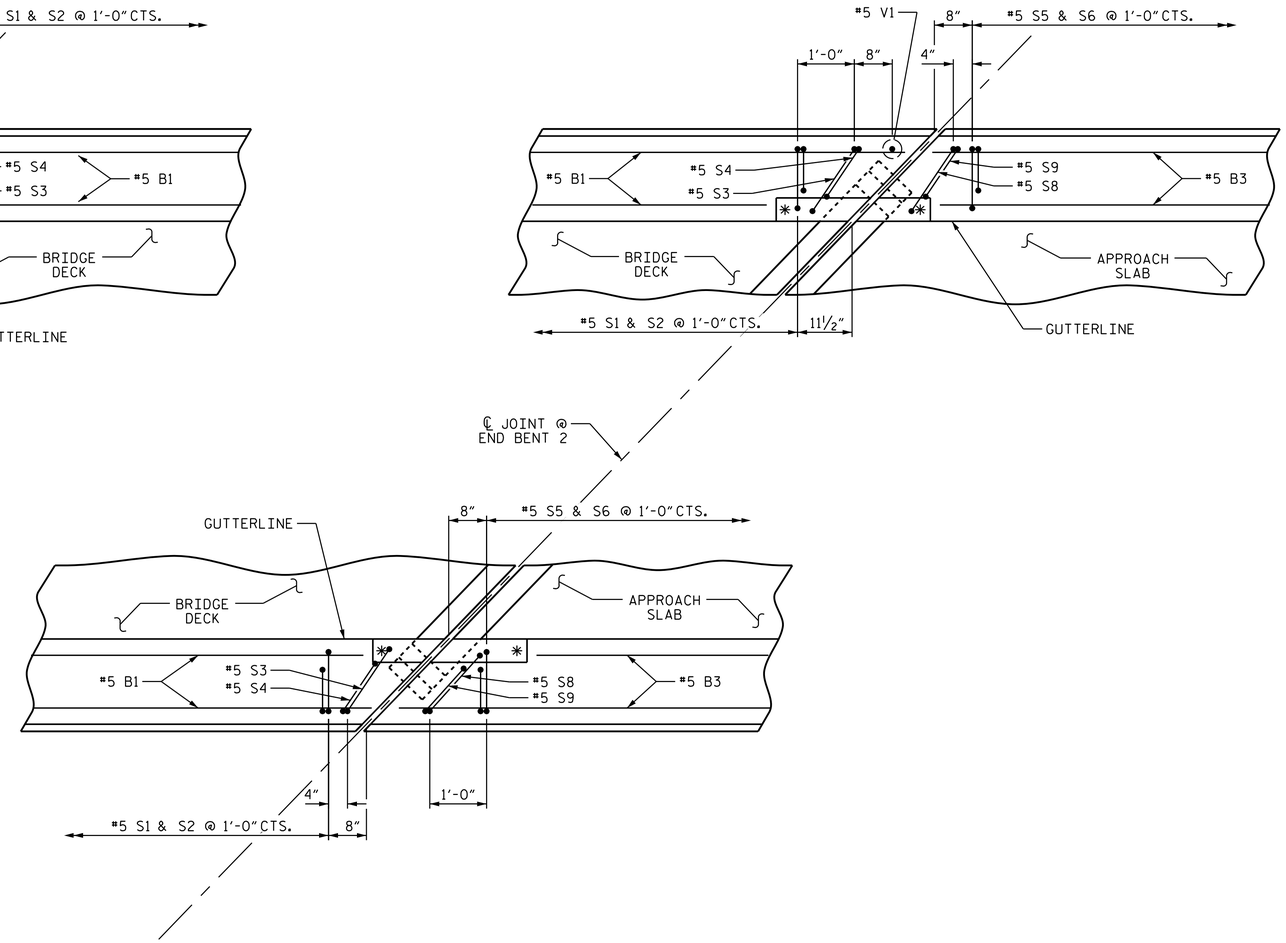

END OF RAIL DETAILS

✱ FOR RECESS DETAILS, SEE "EXPANSION JOINT SEAL DETAILS".

FOR COMPLETE DETAILS OF BARRIER RAILS ON APPROACH SLABS, SEE "BRIDGE APPROACH SLAB DETAILS".

PLACE THE SKEWED S3, S4, S8, AND S9 BARS ADJACENT TO EXPANSION JOINT AS BEST FIT ALONG THE JOINT MAINTAINING A MINIMUM 2" CL. TO EXPANSION JOINT BLOCKOUT OR COVER PLATE BLOCKOUT.

PROJECT NO. I-0914BB
WARREN COUNTY
STATION: 197+54.33 -L-

SHEET 2 OF 2

STATE OF NORTH CAROLINA
DEPARTMENT OF TRANSPORTATION
RALEIGH

CONCRETE BARRIER RAIL

(SOUTHBOUND LANE)

REVISIONS						SHEET NO.
NO.	BY:	DATE:	NO.	BY:	DATE:	S-19
1			3			TOTAL SHEETS
2			4			72

PLANS PREPARED BY:
Hatch Mott MacDonald
PO Box 700 Fuquay-Varina, NC 27526 (919) 552-2253 www.hatchmott.com
LICENSE NO. F-0669

NORTH CAROLINA PROFESSIONAL SEAL 20532 ENGINEER
JOSEPH E. MONDOLFI
9FD29B1F2F8ADC 10/17/2014

DRAWN BY:	J. T. WILLIAMS	DATE:	6-2014
CHECKED BY:	J. E. MONDOLFI	DATE:	6-2014
DESIGN ENGINEER OF RECORD:	J. E. MONDOLFI	DATE:	6-2014

w157077
R:\Structures_SBL\I0914BB_SMU_BR_SBL_01.dgn
10/17/2014 9:00:26 AM