DocuSign Envelope ID: 092FF86A-FF9F-4A0F-BAC7-07FE7A3BD109

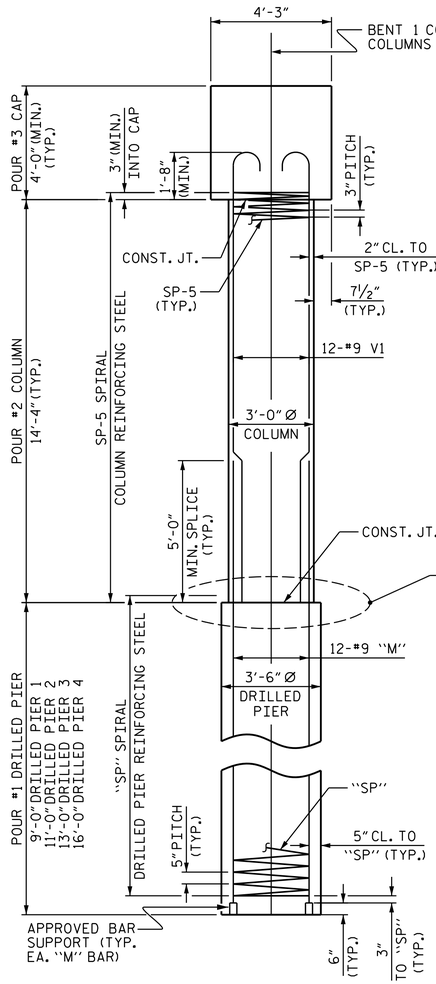

END ELEVATION

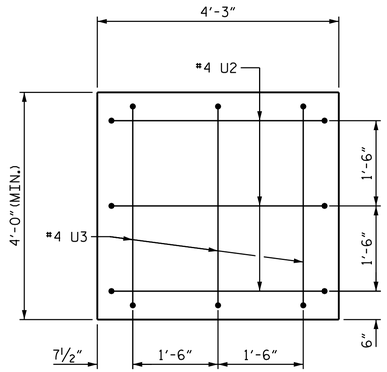

END OF CAP-VIEW X-X

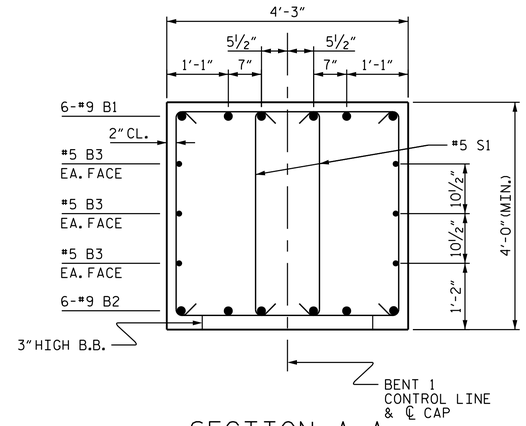

SECTION A-A

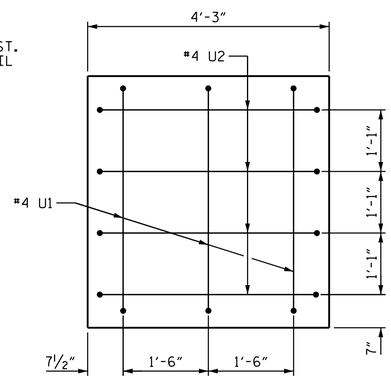

END OF CAP-VIEW Y-Y

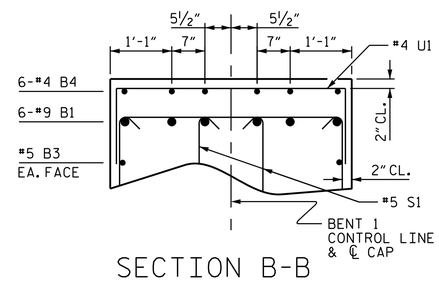

SECTION B-B

BAR TYPES

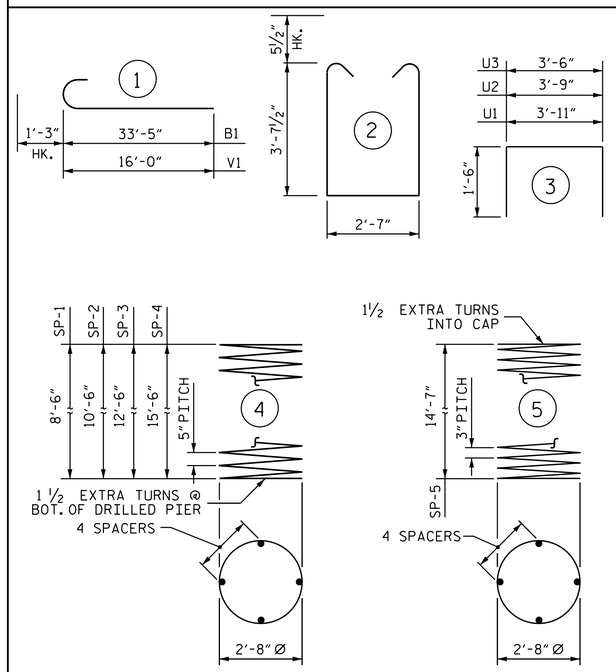

ALL BAR DIMENSIONS ARE OUT TO OUT

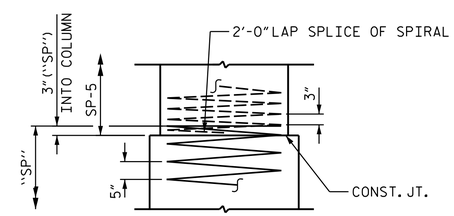

CONSTRUCTION JOINT DETAIL

BILL OF MATERIAL

BENT 1

BAR	NO.	SIZE	TYPE	LENGTH	WEIGHT
B1	12	#9	1	34'-8"	1414
B2	6	#9	STR	58'-2"	1187
B3	6	#5	STR	58'-2"	364
B4	12	#4	STR	13'-3"	106
B5	6	#4	STR	4'-6"	18
M1	12	#9	STR	16'-9"	683
M2	12	#9	STR	18'-9"	765
M3	12	#9	STR	20'-9"	847
M4	12	#9	STR	23'-9"	969
S1	98	#5	2	10'-9"	1099
U1	55	#4	3	6'-11"	254
U2	7	#4	3	6'-9"	32
U3	3	#4	3	6'-6"	13
V1	48	#9	1	17'-3"	2815

REINFORCING STEEL = 10,566 LBS

SP-1	1	*	4	181'-0"	189
SP-2	1	*	4	220'-1"	230
SP-3	1	*	4	259'-1"	270
SP-4	1	*	4	318'-9"	332
SP-5	4	**	5	495'-1"	1323

SPIRAL COLUMN REINFORCING STEEL = 2344 LBS

* THE SP-1 THRU SP-4 SPIRAL REINFORCING STEEL SHALL BE W31 OR D-31 COLD DRAWN WIRE OR #5 PLAIN OR DEFORMED BAR.

** THE SP-5 SPIRAL REINFORCING STEEL SHALL BE W20 OR D-20 COLD DRAWN WIRE OR #4 PLAIN OR DEFORMED BAR.

CLASS A CONCRETE BREAKDOWN

POUR #2 - COLUMNS	15.0 C.Y.
POUR #3 - CAP	38.6 C.Y.
TOTAL	53.6 C.Y.

DRILLED PIERS

DRILLED PIER CONCRETE POUR #1 - DRILLED PIERS	17.5 C.Y.
3'-6" Ø DRILLED PIER IN SOIL	18 LIN. FT.
3'-6" Ø DRILLED PIER NOT IN SOIL	31 LIN. FT.
CSL TUBES	220.0 FT.

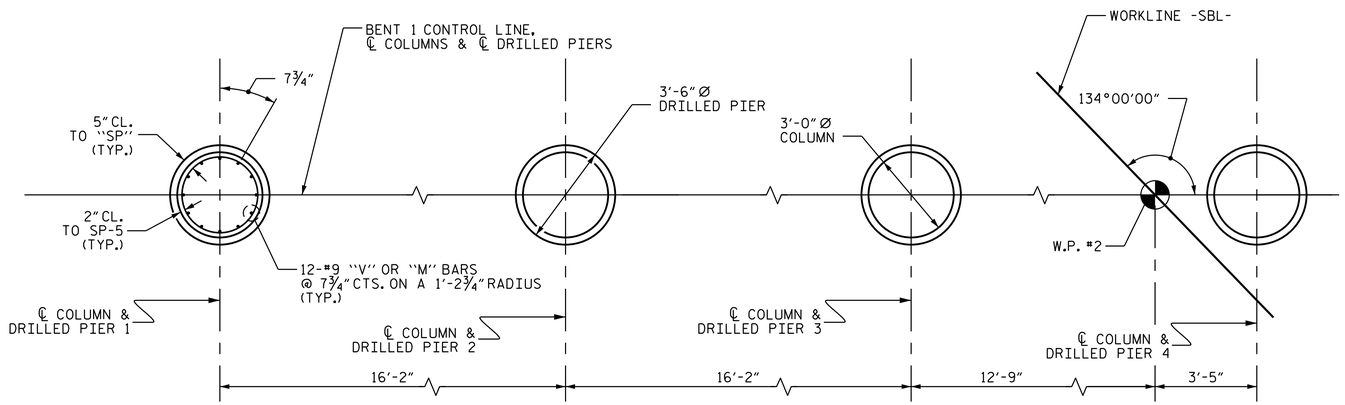

PLAN OF DRILLED PIERS & COLUMNS

PROJECT NO. I-0914BB
WARREN COUNTY
STATION: 197+54.33 -L-

SHEET 2 OF 2

STATE OF NORTH CAROLINA
DEPARTMENT OF TRANSPORTATION
RALEIGH

SUBSTRUCTURE
BENT 1

(SOUTHBOUND LANE)

DRAWN BY: N.J. MACHAK	DATE: 7-2014
CHECKED BY: J.T. WILLIAMS/J.E. MONDOLFI	DATE: 7-2014
DESIGN ENGINEER OF RECORD: J.E. MONDOLFI	DATE: 7-2014

PLANS PREPARED BY:
Hatch Mott MacDonald
PO Box 700 Fuquay-Varina, NC 27526 (919) 552-2253 www.hatchmott.com
LICENSE NO. F-0669

NORTH CAROLINA PROFESSIONAL SEAL 20532 ENGINEER JAMES E. MONDOLFI
DocuSigned by: James E. Mondolfi
9FD29B1FC2FB4D0... 10/17/2014

REVISIONS								SHEET NO.
NO.	BY:	DATE:	NO.	BY:	DATE:			S-26
1			3					TOTAL SHEETS
2			4					72

w:157077
R:\Structures_SBL\I0914BB_SMU_BT_SBL_01.dgn
9/11/2014 2:03:14 PM