DocuSign Envelope ID: 092FF86A-FF9F-4A0F-BAC7-07FE7A3BD109

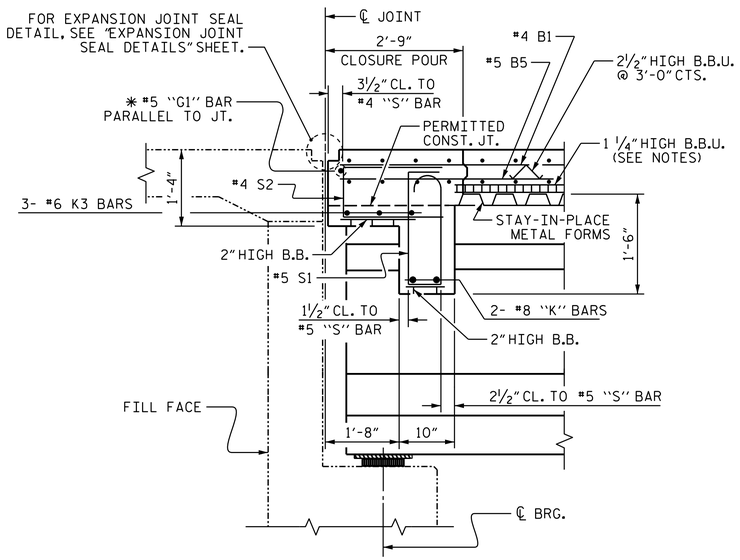

SECTION THRU END BENT DIAPHRAGM

✳ #5G BAR MAY BE SHIFTED SLIGHTLY, AS NECESSARY, TO CLEAR REINFORCING STEEL AND STIRRUPS.

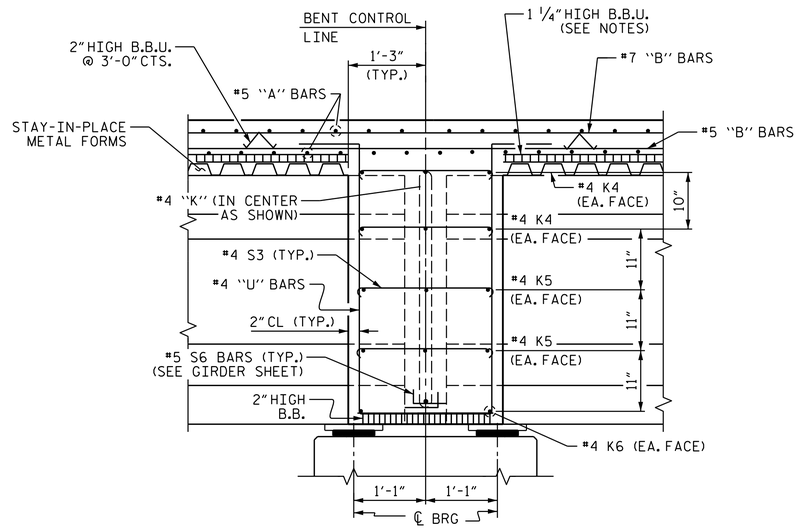

SECTION THRU BENT DIAPHRAGM

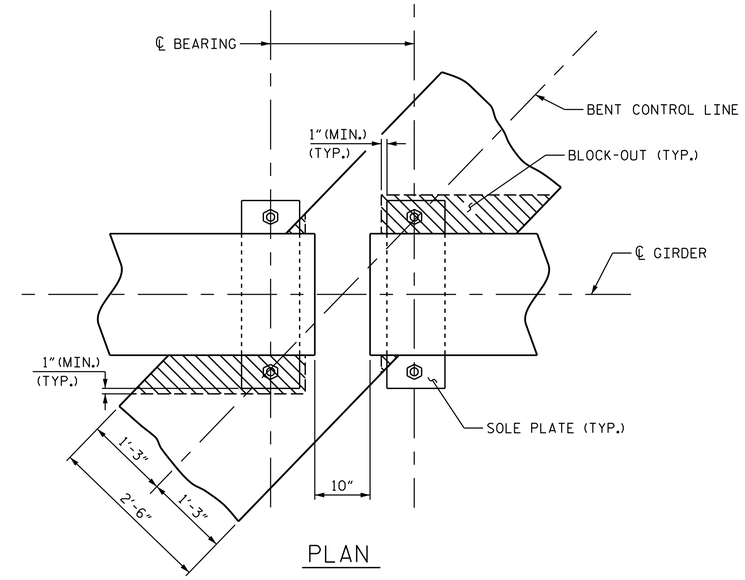

PLAN

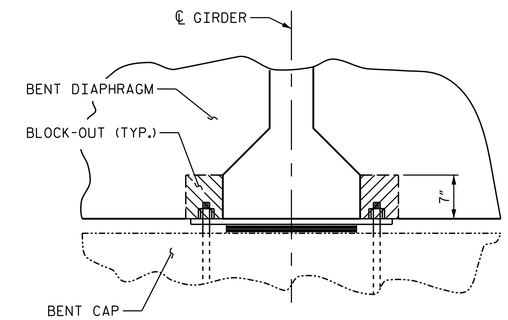

SECTION

BENT DIAPHRAGM BLOCK-OUT DETAIL

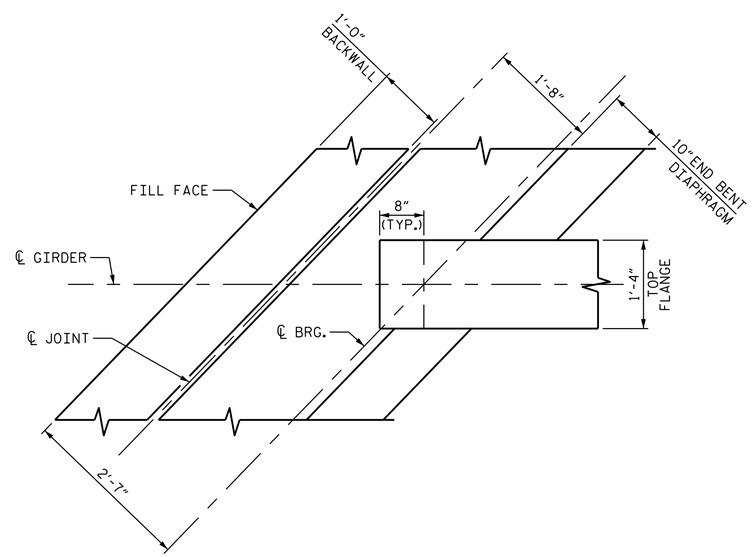

PLAN VIEW OF END BENT DIAPHRAGM

PROJECT NO. I-0914BB
WARREN COUNTY
STATION: 197+54.33 -L-

SHEET 2 OF 2

STATE OF NORTH CAROLINA
DEPARTMENT OF TRANSPORTATION
RALEIGH

SUPERSTRUCTURE
TYPICAL SECTION DETAILS

(SOUTHBOUND LANE)

REVISIONS						SHEET NO.
NO.	BY:	DATE:	NO.	BY:	DATE:	S-6
1			3			TOTAL SHEETS
2			4			72

PLANS PREPARED BY:
Hatch Mott MacDonald
PO Box 700 Fuquay-Varina, NC 27526 (919) 552-2253 www.hatchmott.com
LICENSE NO. F-0669

NORTH CAROLINA PROFESSIONAL SEAL 20532 ENGINEER JOSEPH E. MONDOLFI
9FD2B1FC2FB4D0 10/17/2014

DRAWN BY:	J. T. WILLIAMS	DATE:	6-2014
CHECKED BY:	J. E. MONDOLFI	DATE:	6-2014
DESIGN ENGINEER OF RECORD:	J. E. MONDOLFI	DATE:	6-2014

w:\157077
R:\Structures_SBL\I0914BB_SMU_TS_SBL_01.dgn
9/11/2014 2:02:09 PM