DocuSign Envelope ID: 092FF86A-FF9F-4A0F-BAC7-07FE7A3BD109

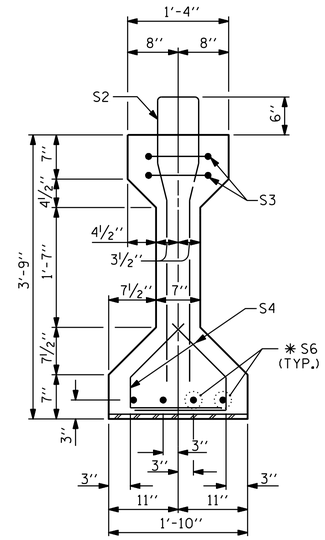

SECTION B-B

DEBONDING LEGEND

- ● FULLY BONDED STRANDS
- STRANDS DEBONDED FOR 4'-0" FROM END OF GIRDER
- STRANDS DEBONDED FOR 14'-0" FROM END OF GIRDER

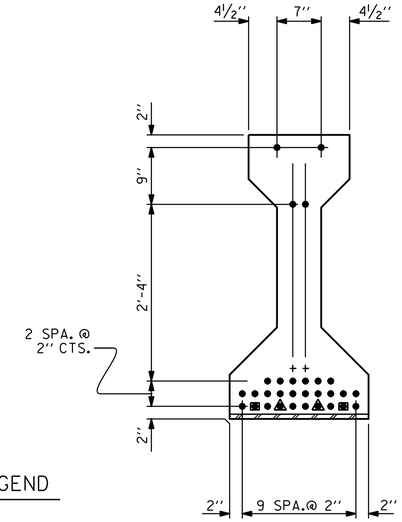

AT END OF GIRDER

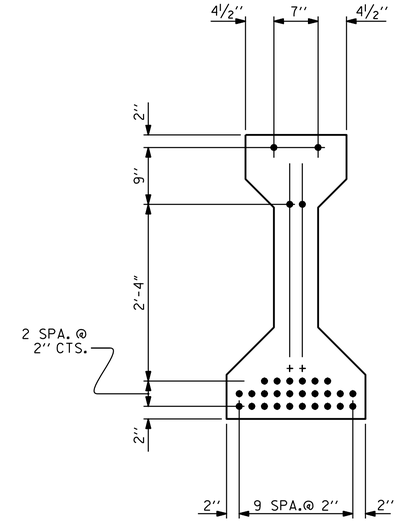

AT ℄ OF GIRDER

0.6'' Ø LOW RELAXATION STRAND LAYOUT

(30 STRANDS, ALL STRAIGHT, 4 DEBONDED STRANDS)

0.6'' Ø L. R. GRADE 270 STRANDS

AREA (SQUARE INCHES)	ULTIMATE STRENGTH (LBS. PER STRAND)	APPLIED PRESTRESS (LBS. PER STRAND)
0.217	58,600	43,950

REINFORCING STEEL FOR ONE GIRDER

	BAR	NUMBER	SIZE	TYPE	LENGTH	WEIGHT
	S1	75	#4	1	8'-6''	426
	S2	16	#6	1	8'-6''	204
	S3	4	#4	3	8'-8''	23
	S4	72	#4	2	2'-9''	132
	✱ S6	8	#5	STR	3'-8''	31
EXTERIOR GDR.	S7	2	#5	3	7'-2''	15
INTERIOR GDR.	S7	4	#5	3	7'-2''	30
EXTERIOR GDR.	S8	5	#4	STR	7'-0''	23
INTERIOR GDR.	S9	5	#4	STR	16-3''	54

✱ NOTE: S6 BARS SHALL BE BENT BEFORE SHIPMENT. HEAT BENDING SHALL NOT BE ALLOWED.

BAR TYPES

ALL BAR DIMENSIONS ARE OUT-TO-OUT

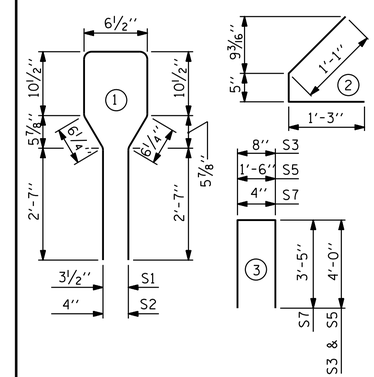

QUANTITIES FOR ONE GIRDER

	REINFORCING STEEL	8500 PSI CONCRETE	0.6'' Ø L. R. STRANDS
	LB.	C.Y.	No.
EXTERIOR GIRDER	854	11.4	30
INTERIOR GIRDER	900	11.4	30

GIRDERS REQUIRED

NUMBER	LENGTH	TOTAL LENGTH
5	79'-2"	395.83'

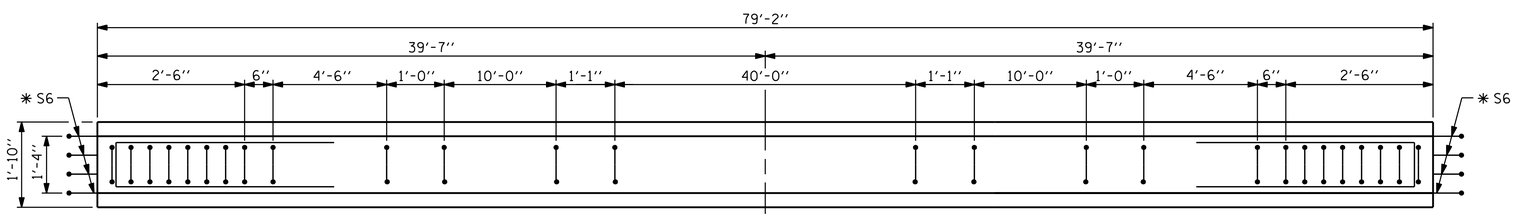

PLAN OF GIRDER

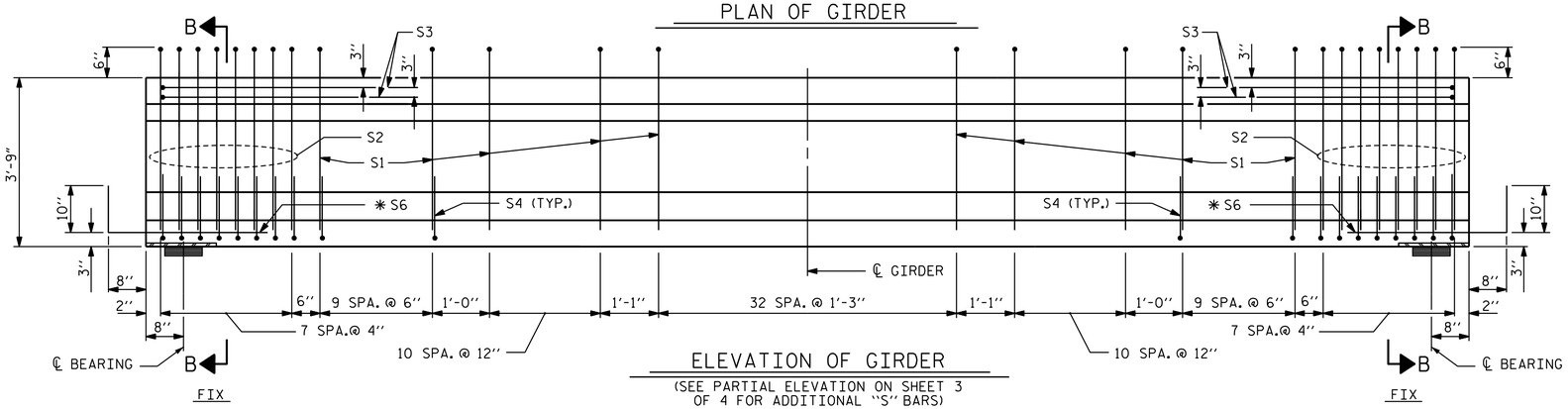

ELEVATION OF GIRDER

(SEE PARTIAL ELEVATION ON SHEET 3 OF 4 FOR ADDITIONAL "S" BARS)

PROJECT NO. I-0914BB

WARREN COUNTY

STATION: 197+54.33 -L-

SHEET 2 OF 4

STATE OF NORTH CAROLINA
DEPARTMENT OF TRANSPORTATION
RALEIGH

AASHTO TYPE III
PRESTRESSED CONCRETE GIRDER
CONTINUOUS FOR LIVE LOAD

SPAN B
(SOUTHBOUND LANE)

REVISIONS						
NO.	BY:	DATE:	NO.	BY:	DATE:	
1			3			
2			4			

SHEET NO. S-12

TOTAL SHEETS 72

DRAWN BY: J. T. WILLIAMS DATE: 6-2014
CHECKED BY: J. E. MONDOLFI DATE: 6-2014
DESIGN ENGINEER OF RECORD: J. E. MONDOLFI DATE: 6-2014

PLANS PREPARED BY:
Hatch Mott MacDonald
PO Box 700 Fuquay-Varina, NC 27526 (919) 552-2253 www.hatchmott.com
LICENSE NO. F-0669

NORTH CAROLINA PROFESSIONAL SEAL 20532 ENGINEER JAMES E. MONDOLFI
9FD29B1FC2FB4D0... 10/17/2014

w:\157077
R:\Structures_SBL\I0914BB_SMU_G2_SBL_01.dgn
9/11/2014 2:02:28 PM