DocuSign Envelope ID: 092FF86A-FF9F-4A0F-BAC7-07FE7A3BD109

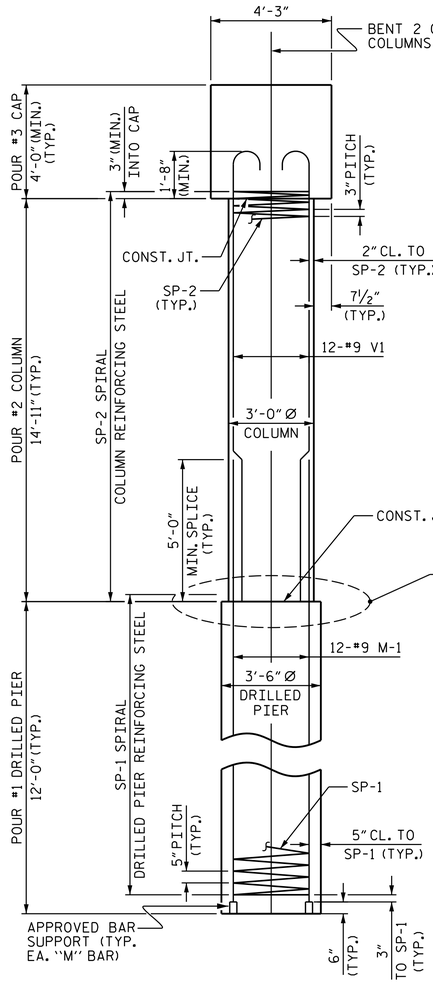

END ELEVATION

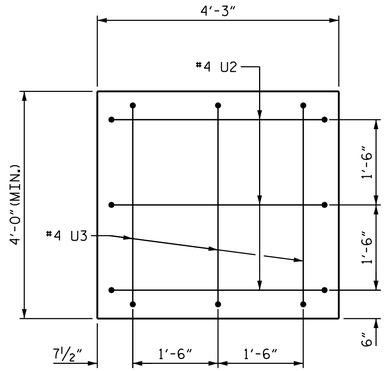

END OF CAP-VIEW X-X

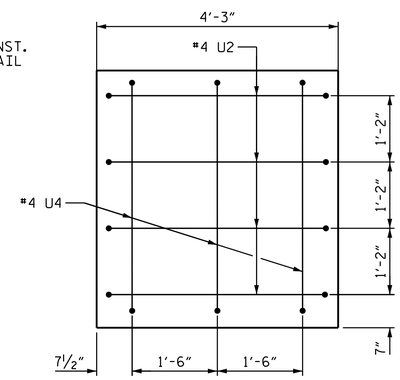

END OF CAP-VIEW Y-Y

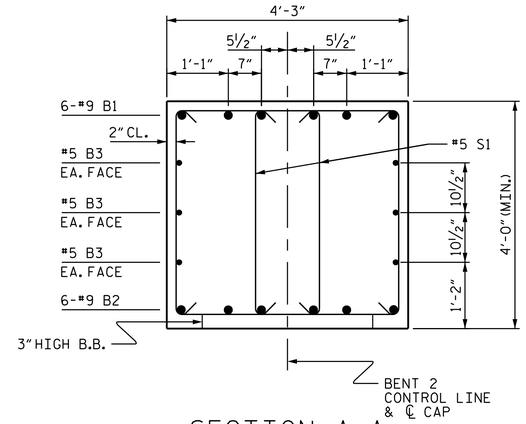

SECTION A-A

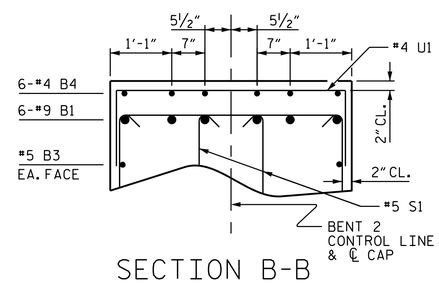

SECTION B-B

BAR TYPES

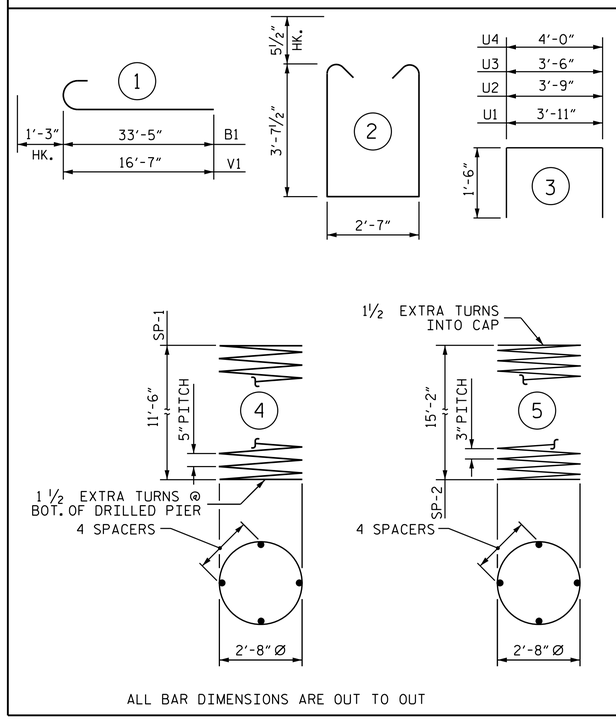

ALL BAR DIMENSIONS ARE OUT TO OUT

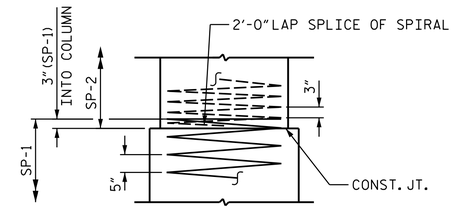

CONSTRUCTION JOINT DETAIL

BILL OF MATERIAL

BENT 2

BAR	NO.	SIZE	TYPE	LENGTH	WEIGHT
B1	12	#9	1	34'-8"	1414
B2	6	#9	STR	58'-2"	1187
B3	6	#5	STR	58'-2"	364
B4	12	#4	STR	13'-3"	106
B5	6	#4	STR	4'-6"	18
M1	48	#9	STR	19'-9"	3223
S1	98	#5	2	10'-9"	1099
U1	52	#4	3	6'-11"	240
U2	7	#4	3	6'-9"	32
U3	3	#4	3	6'-6"	13
U4	3	#4	3	7'-0"	14
V1	48	#9	1	17'-10"	2910
REINFORCING STEEL =					10,620 LBS
SP-1	4	*	4	240'-7"	1004
SP-2	4	**	5	513'-8"	1373
SPIRAL COLUMN REINFORCING STEEL =					2377 LBS

* THE SP-1 SPIRAL REINFORCING STEEL SHALL BE W31 OR D-31 COLD DRAWN WIRE OR #5 PLAIN OR DEFORMED BAR.

** THE SP-2 SPIRAL REINFORCING STEEL SHALL BE W20 OR D-20 COLD DRAWN WIRE OR #4 PLAIN OR DEFORMED BAR.

CLASS A CONCRETE BREAKDOWN

POUR #2 - COLUMNS	15.7 C.Y.
POUR #3 - CAP	39.0 C.Y.
TOTAL	54.7 C.Y.

DRILLED PIERS

DRILLED PIER CONCRETE POUR #1 - DRILLED PIERS	17.1 C.Y.
3'-6" Ø DRILLED PIER IN SOIL	19 LIN. FT.
3'-6" Ø DRILLED PIER NOT IN SOIL	29 LIN. FT.
CSL TUBES	216.0 FT.

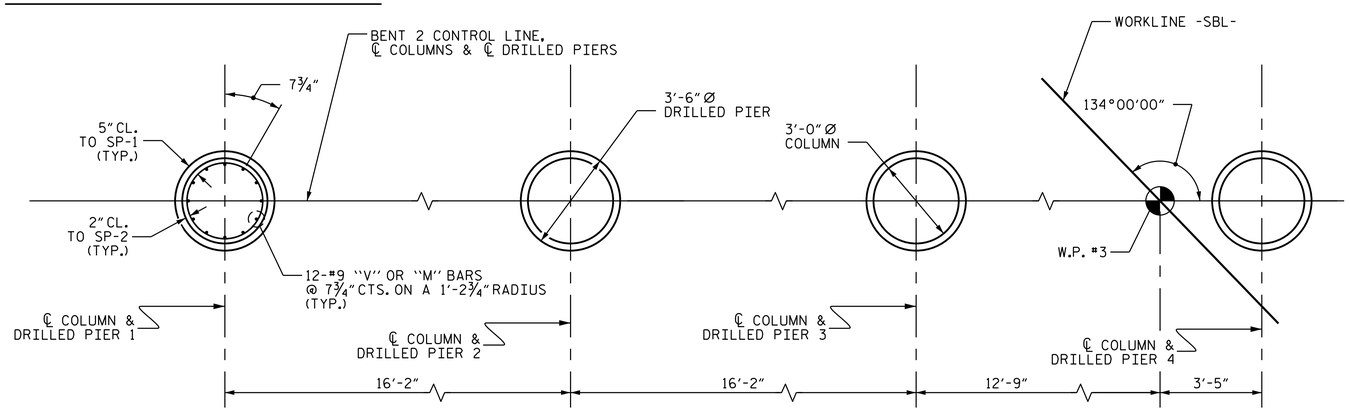

PLAN OF DRILLED PIERS & COLUMNS

PROJECT NO. I-0914BB

WARREN COUNTY

STATION: 197+54.33 -L-

SHEET 2 OF 2

STATE OF NORTH CAROLINA
DEPARTMENT OF TRANSPORTATION
RALEIGH

SUBSTRUCTURE

BENT 2

(SOUTHBOUND LANE)

DRAWN BY:	N.J. MACHAK	DATE:	7-2014
CHECKED BY:	J.T. WILLIAMS/J.E. MONDOLFI	DATE:	7-2014
DESIGN ENGINEER OF RECORD:	J.E. MONDOLFI	DATE:	7-2014

PLANS PREPARED BY:
Hatch Mott MacDonald
PO Box 700 Fuquay-Varina, NC 27526 (919) 552-2253 www.hatchmott.com
LICENSE NO. F-0669

NORTH CAROLINA PROFESSIONAL SEAL 20532 ENGINEER JAMES E. MONDOLFI
9FD29B1FC2FB4D0 10/17/2014

REVISIONS								SHEET NO.
NO.	BY:	DATE:	NO.	BY:	DATE:			S-28
1			3					TOTAL SHEETS
2			4					72

w:\157077 R:\Structures_SBL\I0914BB_SMU_BT_SBL_01.dgn 9/11/2014 2:03:20 PM