DocuSign Envelope ID: 3F424BAB-583E-431A-81CE-1B677A5ACEC2

NOTES:

STIRRUPS IN CAP MAY BE SHIFTED AS NECESSARY TO CLEAR ANCHOR BOLTS.

BACKWALL SHALL BE PLACED BEFORE APPLYING THE EPOXY PROTECTIVE COATING.

THE TOP SURFACE AREAS OF THE END BENT CAPS SHALL BE CURED IN ACCORDANCE WITH THE STANDARD SPECIFICATIONS EXCEPT THE MEMBRANE CURING COMPOUND METHOD SHALL NOT BE USED.

THE TOP SURFACE OF THE CAP EXCEPT THE BRIDGE SEAT BUILDUPS SHALL BE SLOPED TRANSVERSELY FROM THE FILL FACE TO THE BACK FACE AT THE RATE OF 2%.

INSTALL THE 4" DIAMETER DRAIN PIPE THROUGH THE WINGWALL AS REQUIRED FOR REINFORCED BRIDGE APPROACH FILLS. SEE THE ROADWAY PLANS. REINFORCING STEEL IN THE WINGWALL MAY BE SHIFTED AS NECESSARY TO CLEAR THE DRAIN PIPE.

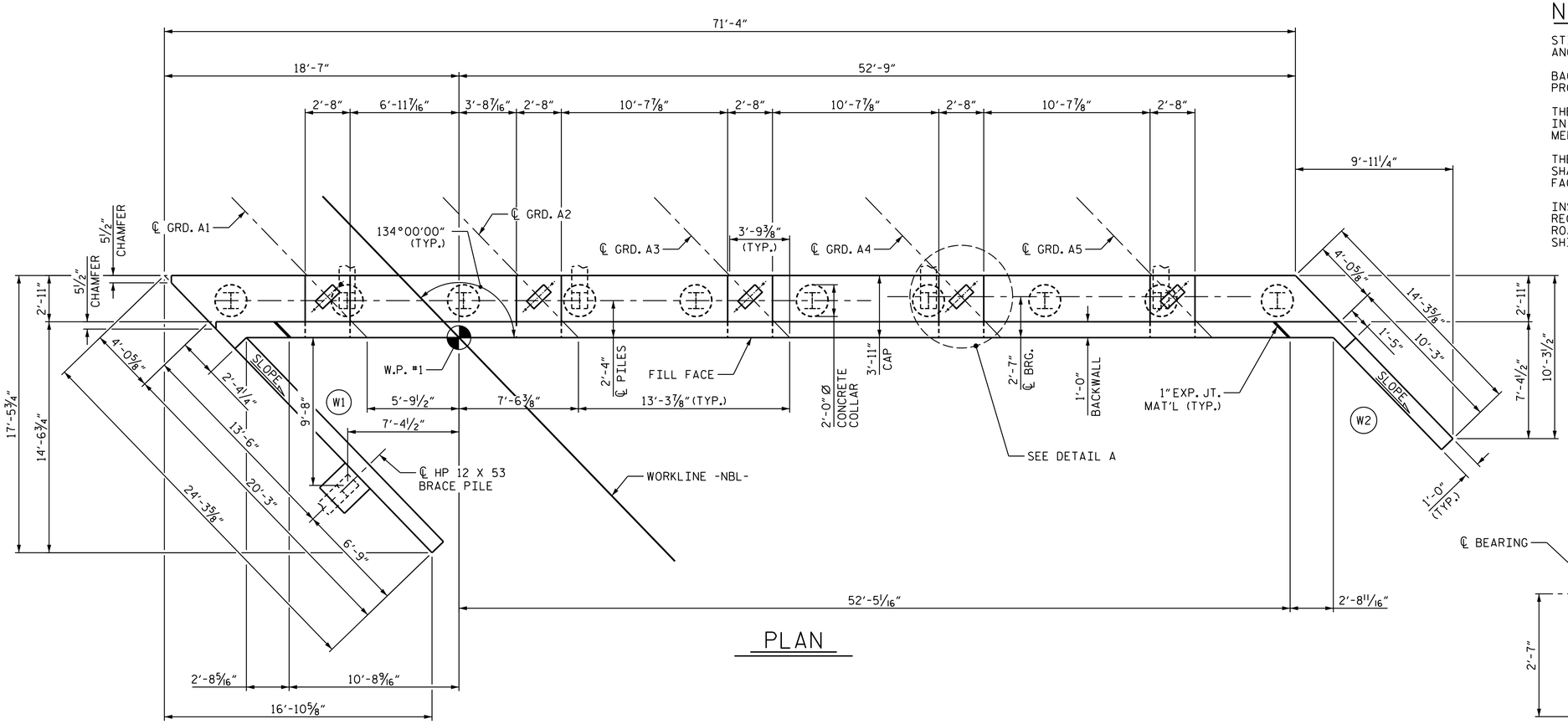

PLAN

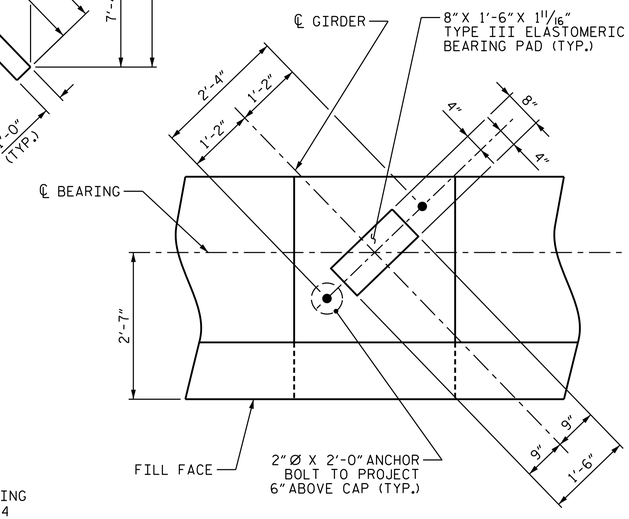

DETAIL A

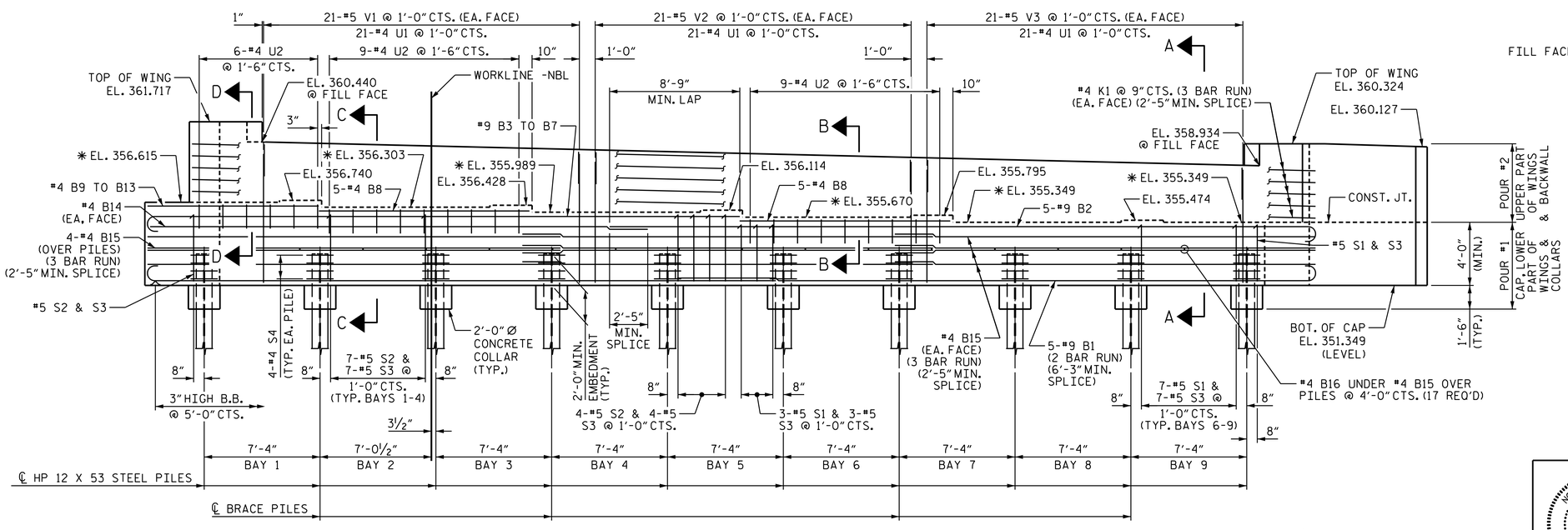

ELEVATION

(LEFT WING NOT SHOWN FOR CLARITY)

✱ FOR LOCATION ON CAP SEE SHEET 3 OF 3

PROJECT NO. I-0914BB
WARREN COUNTY
STATION: 197+54.33 -L-

SHEET 1 OF 3

STATE OF NORTH CAROLINA
DEPARTMENT OF TRANSPORTATION
RALEIGH

SUBSTRUCTURE
END BENT #1

(NORTHBOUND LANE)

REVISIONS								SHEET NO.
NO.	BY:	DATE:	NO.	BY:	DATE:			S-58
1			3					TOTAL SHEETS
2			4					72

NORTH CAROLINA PROFESSIONAL SEAL 20532 ENGINEER JAMES E. MONDOLFI
9FD29B1FC2FB4D0 10/17/2014

PLANS PREPARED BY:
Hatch Mott MacDonald
PO Box 700 Fuquay-Varina, NC 27526 (919) 552-2253 www.hatchmott.com
LICENSE NO. F-0669

DRAWN BY:	J. T. WILLIAMS	DATE:	5-2014
CHECKED BY:	J. E. MONDOLFI	DATE:	5-2014
DESIGN ENGINEER OF RECORD:	J. E. MONDOLFI	DATE:	5-2014

w:\157077
R:\Structures_NBL\I0914BB_SMU_EB_NBL_02.dgn
9/11/2014 2:05:08 PM