DocuSign Envelope ID: 092FF86A-FF9F-4A0F-BAC7-07FE7A3BD109

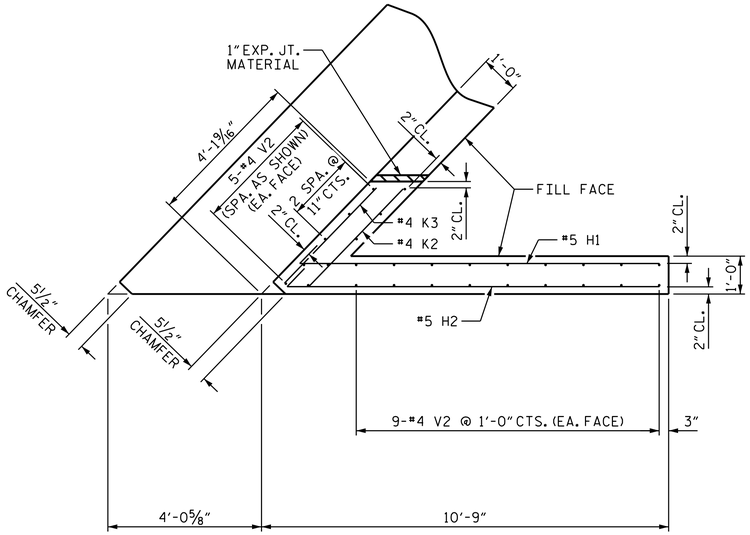

PLAN OF WING W1

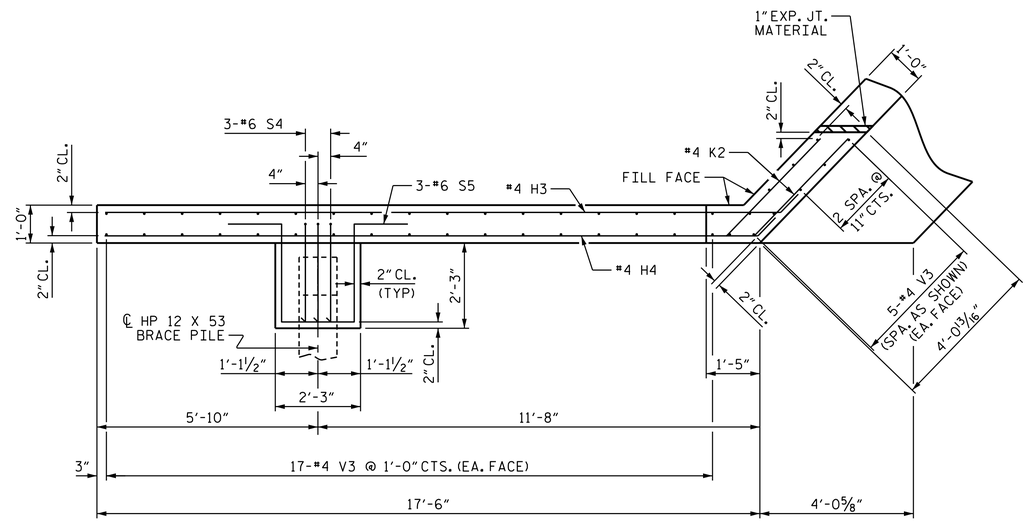

PLAN OF WING W2

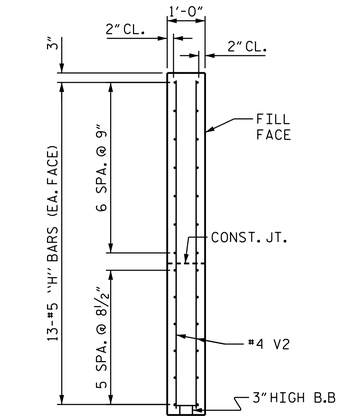

SECTION X-X

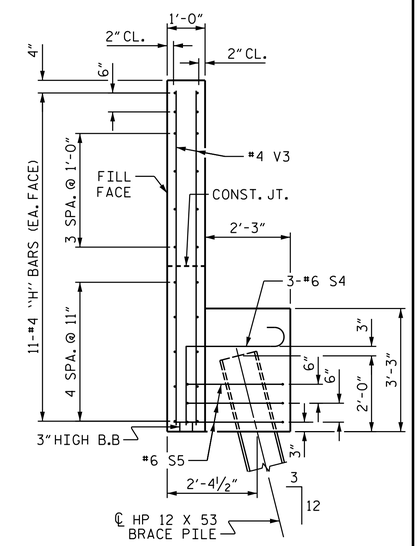

SECTION Y-Y

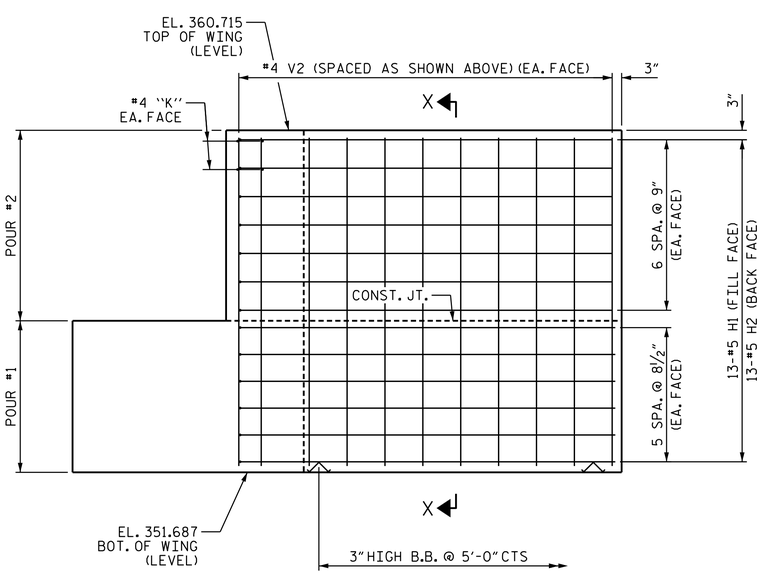

ELEVATION OF WING W1

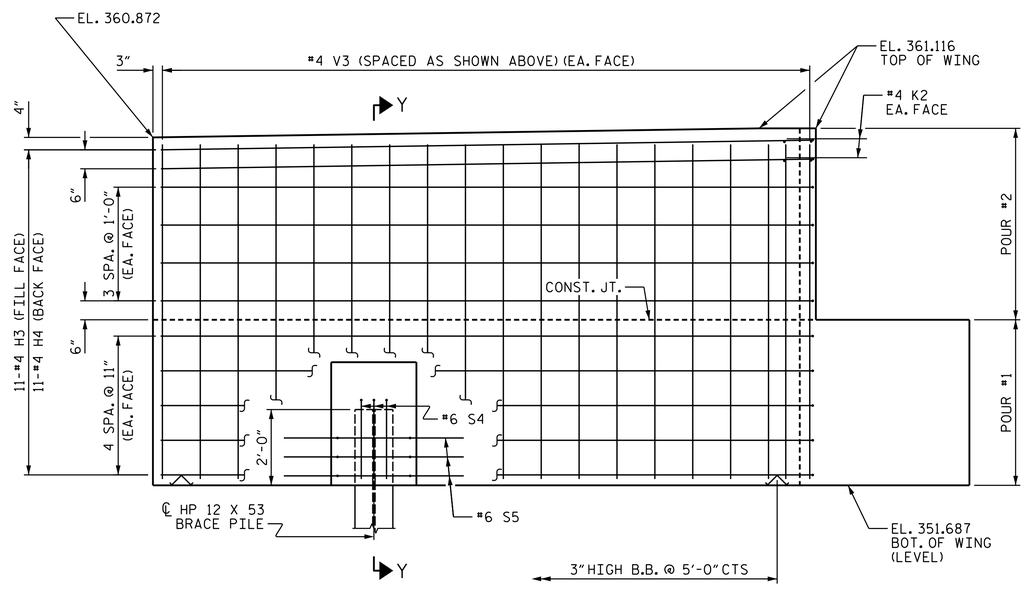

ELEVATION OF WING W2

PROJECT NO. I-0914BB
WARREN COUNTY
STATION: 197+54.33 -L-

SHEET 2 OF 3

STATE OF NORTH CAROLINA
DEPARTMENT OF TRANSPORTATION
RALEIGH

SUBSTRUCTURE
END BENT #1

(SOUTHBOUND LANE)

REVISIONS						SHEET NO.
NO.	BY:	DATE:	NO.	BY:	DATE:	S-23
1			3			TOTAL SHEETS
2			4			72

NORTH CAROLINA PROFESSIONAL SEAL 20532 ENGINEER J. E. MONDOLFI
DocuSigned by: J. E. MONDOLFI
9FD29B1FC2FB4D0... 10/17/2014

PLANS PREPARED BY:
Hatch Mott MacDonald
PO Box 700
Fuquay-Varina, NC 27526
(919) 552-2253
www.hatchmott.com
LICENSE NO. F-0669

DRAWN BY:	J. T. WILLIAMS	DATE:	7-2014
CHECKED BY:	J. E. MONDOLFI	DATE:	7-2014
DESIGN ENGINEER OF RECORD:	J. E. MONDOLFI	DATE:	7-2014

w157077
R:\Structures_SBL\I0914BB_SMU_EB_SBL_01.dgn
9/11/2014 2:03:03 PM