DocuSign Envelope ID: 3F424BAB-583E-431A-81CE-1B677A5ACEC2

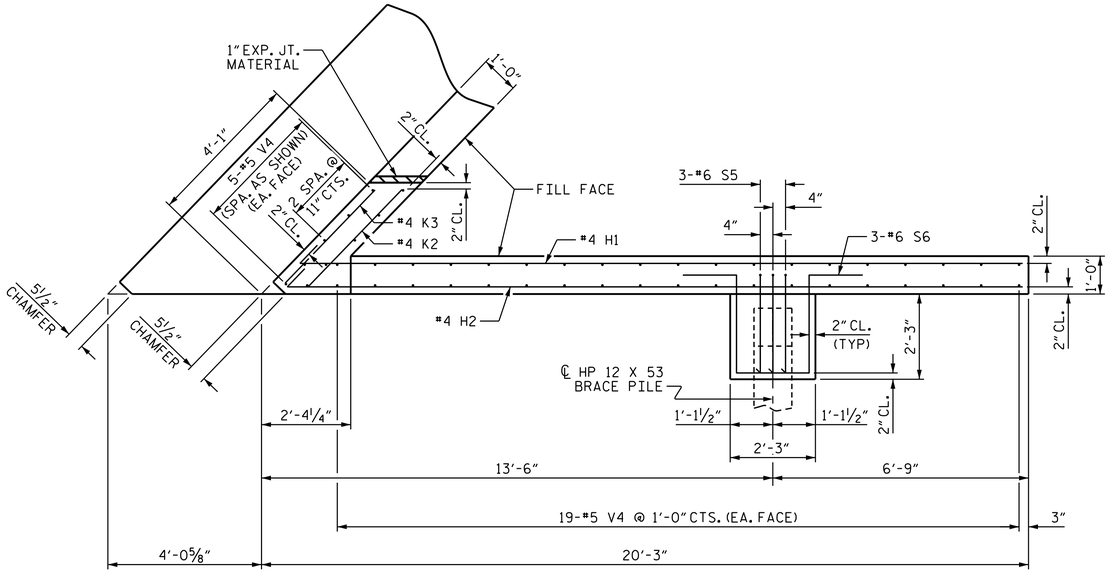

PLAN OF WING W1

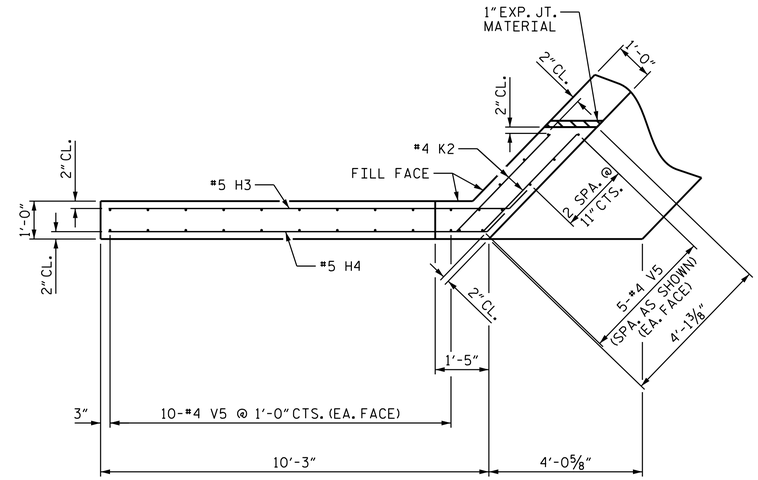

PLAN OF WING W2

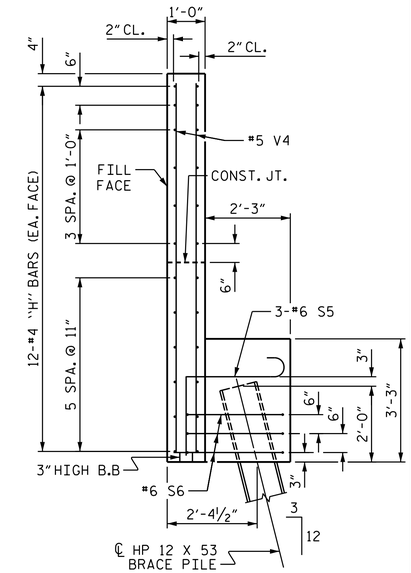

SECTION X-X

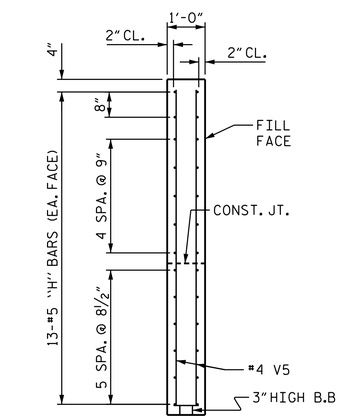

SECTION Y-Y

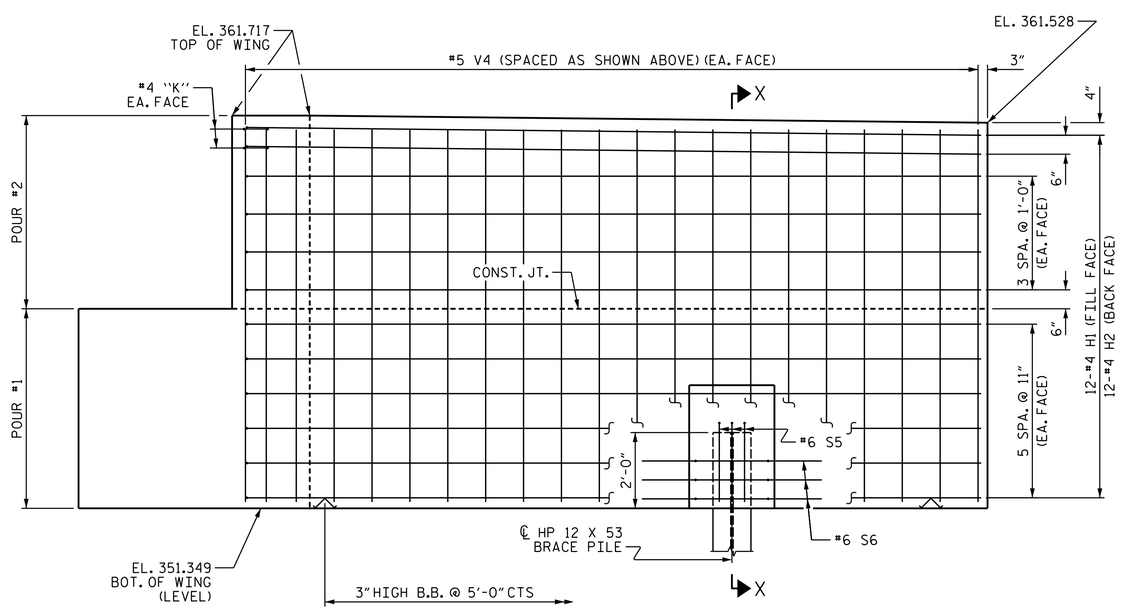

ELEVATION OF WING W1

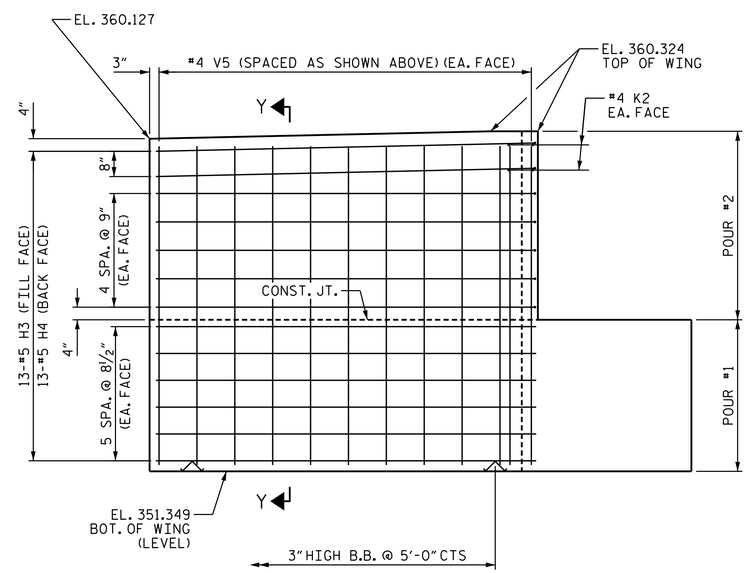

ELEVATION OF WING W2

PROJECT NO. I-0914BB
WARREN COUNTY
STATION: 197+54.33 -L-

SHEET 2 OF 3

STATE OF NORTH CAROLINA
DEPARTMENT OF TRANSPORTATION
RALEIGH

SUBSTRUCTURE
END BENT #1

(NORTHBOUND LANE)

REVISIONS								SHEET NO.
NO.	BY:	DATE:	NO.	BY:	DATE:			S-59
1			3					TOTAL SHEETS
2			4					72

DRAWN BY: J. T. WILLIAMS DATE: 5-2014
CHECKED BY: J. E. MONDOLFI DATE: 5-2014
DESIGN ENGINEER OF RECORD: J. E. MONDOLFI DATE: 5-2014

PLANS PREPARED BY:
Hatch Mott MacDonald
PO Box 700
Fuquay-Varina, NC 27526
(919) 552-2253
www.hatchmott.com
LICENSE NO. F-0669

NORTH CAROLINA PROFESSIONAL SEAL 20532 ENGINEER
JOSEPH E. MONDOLFI
9FD29B1FC2FB4D0... 10/17/2014

w:\157077
R:\Structures_NBL\I0914BB_SMU_EB_NBL_02.dgn
9/11/2014 2:05:12 PM