DocuSign Envelope ID: 3F424BAB-583E-431A-81CE-1B677A5ACEC2

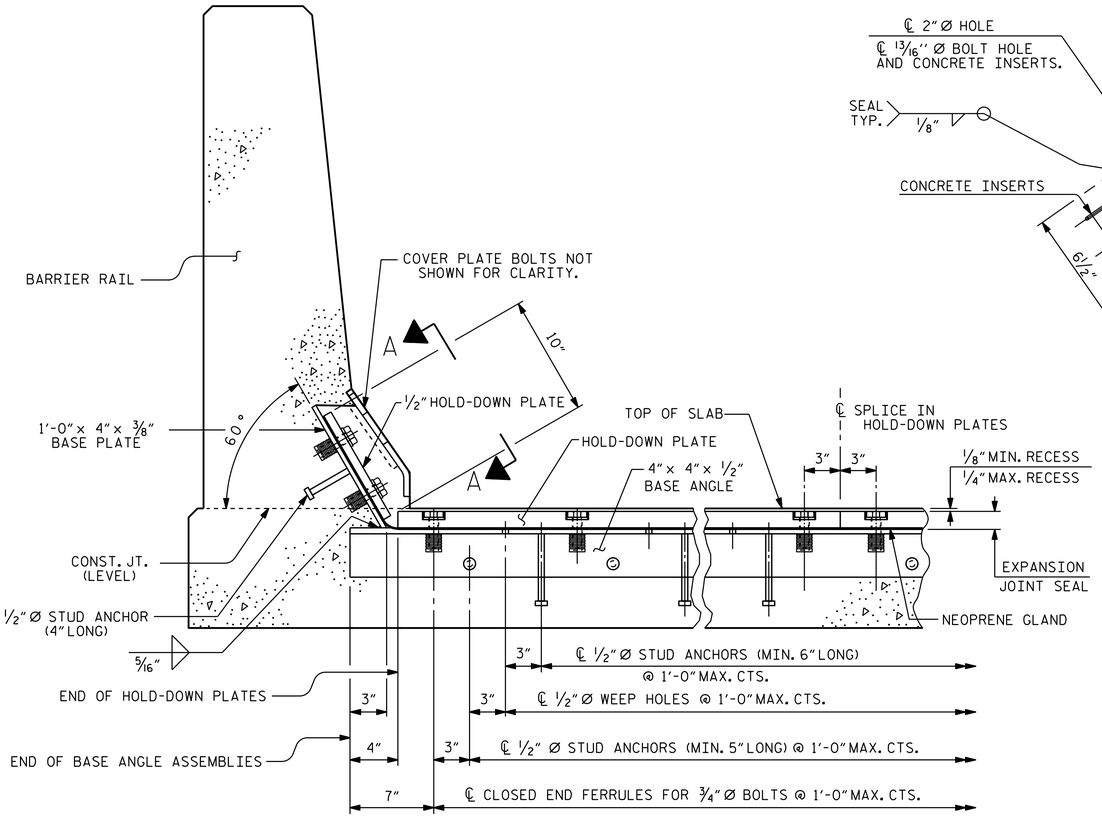

SECTION THRU RAIL NORMAL TO JOINT

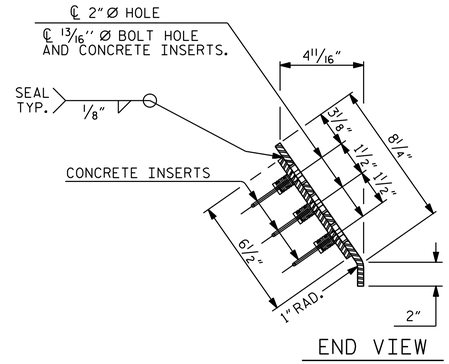

END VIEW

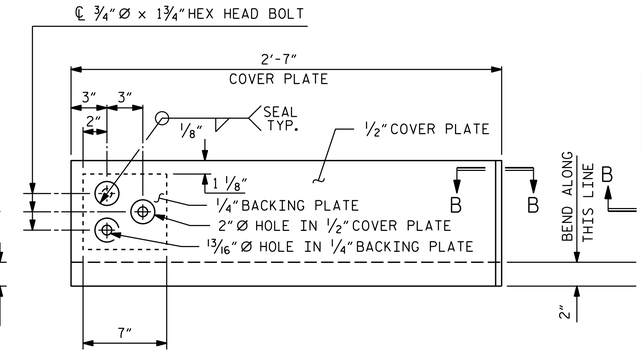

TYPE I - ELEVATION VIEW

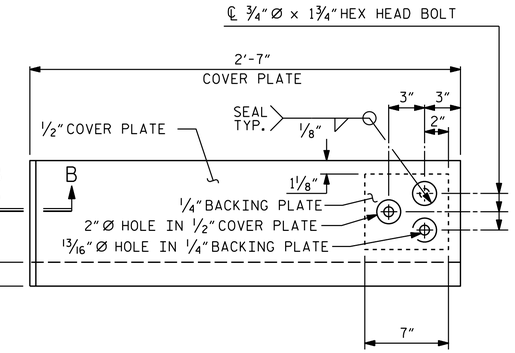

TYPE II - ELEVATION VIEW

COVER PLATE DETAILS

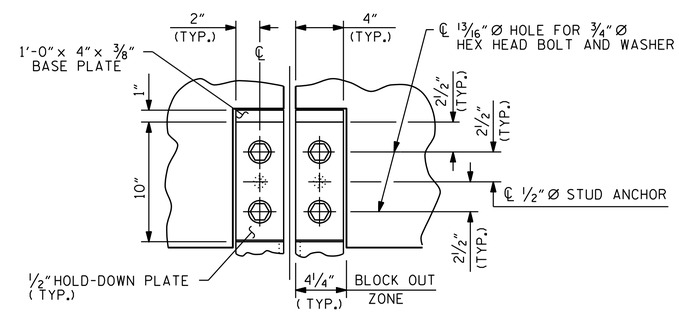

SECTION A - A

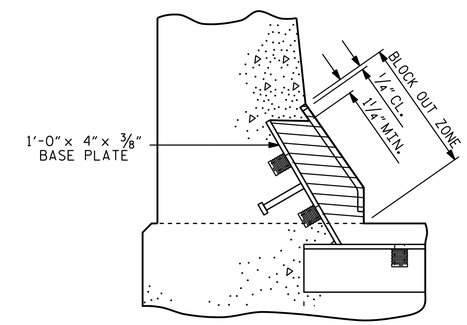

BLOCK OUT DETAIL

SEE " SECTION A - A " FOR OTHER DETAILS.

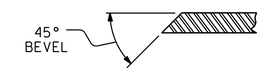

SECTION B - B

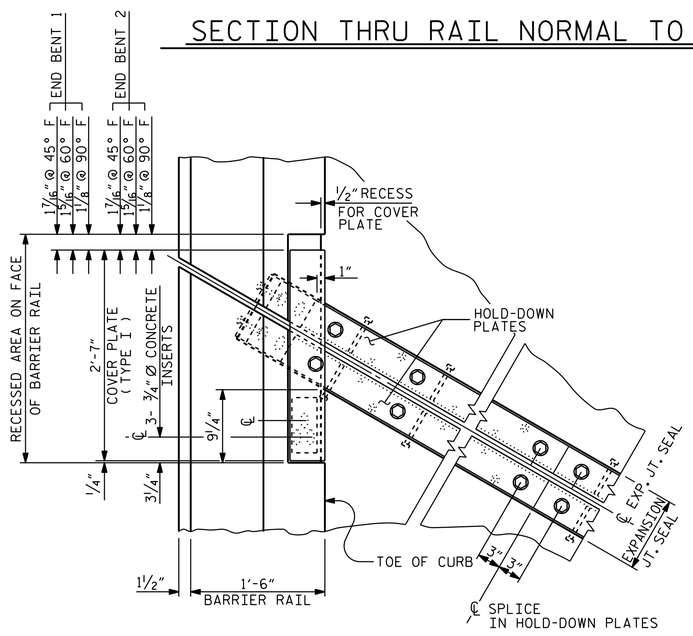

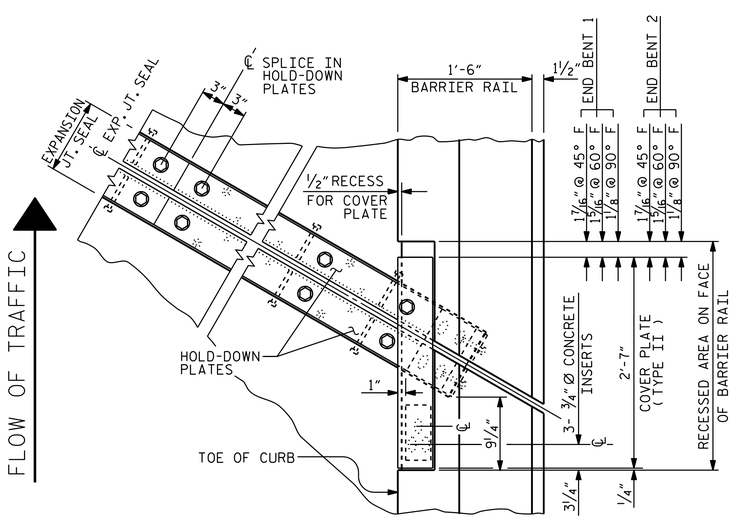

PLAN OF EXPANSION JOINT SEAL

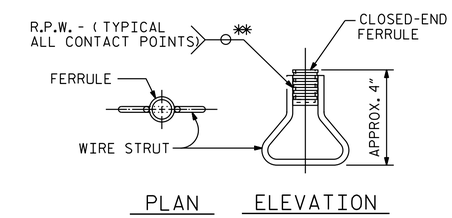

CONCRETE INSERT

** EACH WELDED ATTACHMENT OF WIRE TO FERRULE SHALL DEVELOP THE TENSILE STRENGTH OF THE WIRE.

PROJECT NO. I-0914BB
WARREN COUNTY
STATION: 197+54.33 -L-

SHEET 2 OF 2

STATE OF NORTH CAROLINA
DEPARTMENT OF TRANSPORTATION
RALEIGH

EXPANSION JOINT SEAL DETAILS FOR BARRIER RAIL
(NORTHBOUND LANE)

REVISIONS								SHEET NO.
NO.	BY:	DATE:	NO.	BY:	DATE:			S-53
1			3					TOTAL SHEETS
2			4					72

PLANS PREPARED BY:
Hatch Mott MacDonald
PO Box 700
Fuquay-Varina, NC 27526
(919) 552-2253
www.hatchmott.com
LICENSE NO. F-0669

NORTH CAROLINA PROFESSIONAL SEAL 20532 ENGINEER
JAMES E. MONDOLFI
9FD29B1F2CFB4D0... 10/17/2014

DRAWN BY:	J. T. WILLIAMS	DATE:	4-2014
CHECKED BY:	J. E. MONDOLFI	DATE:	4-2014
DESIGN ENGINEER OF RECORD:	J. E. MONDOLFI	DATE:	4-2014

w:\157077
R:\Structures_NBL\I0914BB_SMU_JS_NBL_02.dgn
9/11/2014 2:04:49 PM