DocuSign Envelope ID: 3F424BAB-583E-431A-81CE-1B677A5ACEC2

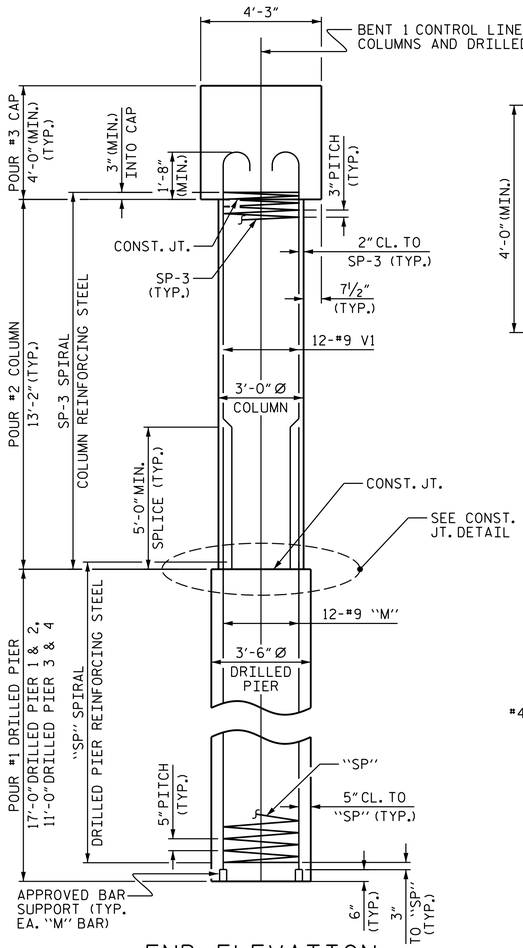

END ELEVATION

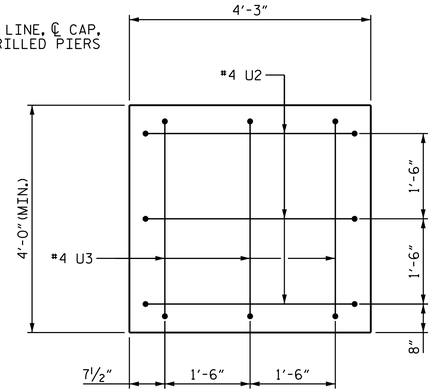

END OF CAP-VIEW X-X

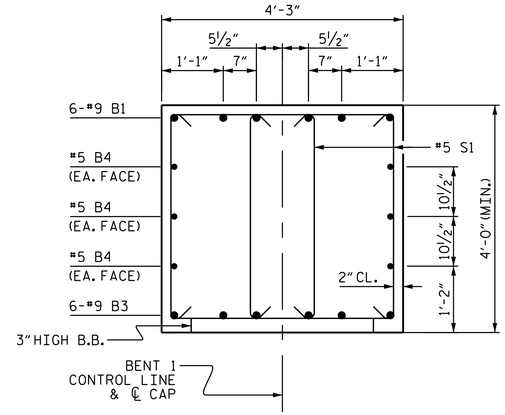

SECTION A-A

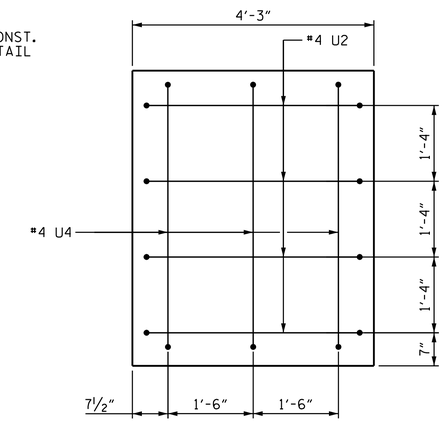

END OF CAP-VIEW Y-Y

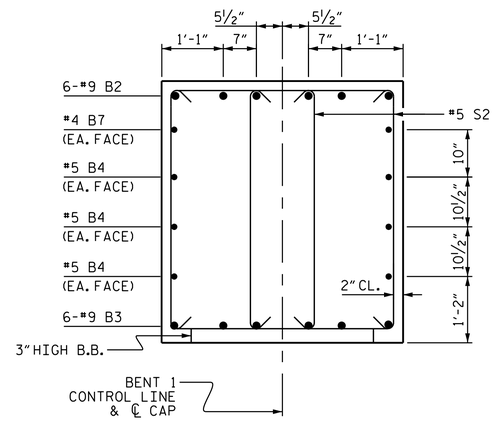

SECTION B-B

BAR TYPES

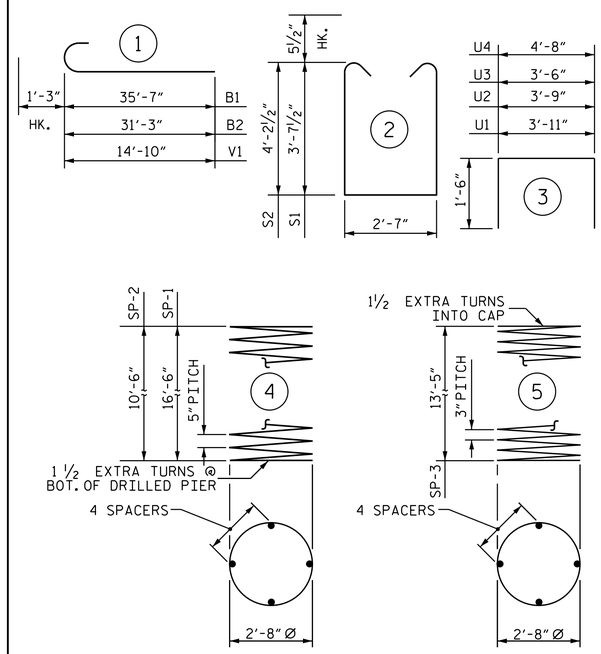

ALL BAR DIMENSIONS ARE OUT TO OUT

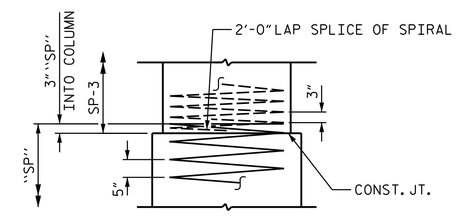

CONSTRUCTION JOINT DETAIL

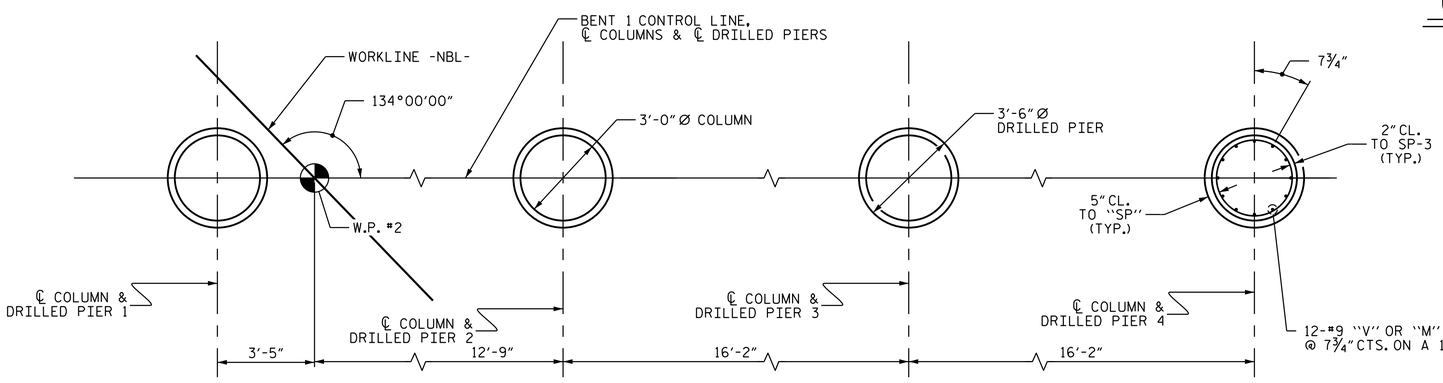

PLAN OF DRILLED PIERS & COLUMNS

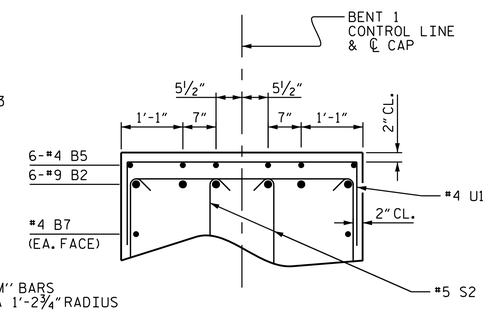

SECTION C-C

BILL OF MATERIAL

BENT 1

BAR	NO.	SIZE	TYPE	LENGTH	WEIGHT
B1	6	#9	1	36'-10"	751
B2	6	#9	1	32'-6"	663
B3	6	#9	STR	58'-2"	1187
B4	6	#5	STR	58'-2"	364
B5	12	#4	STR	13'-3"	106
B6	6	#4	STR	4'-6"	18
B7	2	#4	STR	25'-1"	34
M1	24	#9	STR	24'-9"	2020
M2	24	#9	STR	18'-9"	1530
S1	46	#5	2	10'-9"	516
S2	52	#5	2	11'-11"	646
U1	52	#4	3	6'-11"	240
U2	7	#4	3	6'-9"	32
U3	3	#4	3	6'-6"	13
U4	3	#4	3	7'-8"	15
V1	48	#9	1	16'-1"	2625
REINFORCING STEEL =					10,760 LBS
SP-1	2	*	4	339'-4"	708
SP-2	2	*	4	220'-1"	459
SP-3	4	**	5	455'-11"	1218
SPIRAL COLUMN REINFORCING STEEL =					2385 LBS

* THE SP-1 AND SP-2 SPIRAL REINFORCING STEEL SHALL BE W31 OR D-31 COLD DRAWN WIRE OR #5 PLAIN OR DEFORMED BAR.

** THE SP-3 SPIRAL REINFORCING STEEL SHALL BE W20 OR D-20 COLD DRAWN WIRE OR #4 PLAIN OR DEFORMED BAR.

CLASS A CONCRETE BREAKDOWN	
POUR #2 - COLUMNS	13.8 C.Y.
POUR #3 - CAP	41.6 C.Y.
TOTAL	55.4 C.Y.

DRILLED PIERS	
DRILLED PIER CONCRETE POUR #1 - DRILLED PIERS	20.0 C.Y.
3'-6" Ø DRILLED PIER IN SOIL	23 LIN. FT.
3'-6" Ø DRILLED PIER NOT IN SOIL	33 LIN. FT.
CSL TUBES	248.0 FT.

PROJECT NO. I-0914BB

WARREN COUNTY

STATION: 197+54.33 -L-

SHEET 2 OF 2

STATE OF NORTH CAROLINA
DEPARTMENT OF TRANSPORTATION
RALEIGH

SUBSTRUCTURE

BENT 1

(NORTHBOUND LANE)

REVISIONS							SHEET NO.
NO.	BY:	DATE:	NO.	BY:	DATE:		S-62
1			3				TOTAL SHEETS
2			4				72

PLANS PREPARED BY:
Hatch Mott MacDonald
PO Box 700
Fuquay-Varina, NC 27526
(919) 552-2253
www.hatchmott.com
LICENSE NO. F-0669

NORTH CAROLINA PROFESSIONAL SEAL 20532 ENGINEER JOSEPH E. MONDOLFI
9FD29B1FC2FB4D0... 10/17/2014

DRAWN BY: Q. WILLIAMS DATE: 7-2014
CHECKED BY: J.T. WILLIAMS/J.E. MONDOLFI DATE: 7-2014
DESIGN ENGINEER OF RECORD: J.E. MONDOLFI DATE: 7-2014

w1570077
R:\Structures_NBL\I0914BB_SMU_BT_NBL_02.dgn
9/11/2014 2:05:24 PM