DocuSign Envelope ID: 00605353-4539-49CF-94BE-694EBD6A841D

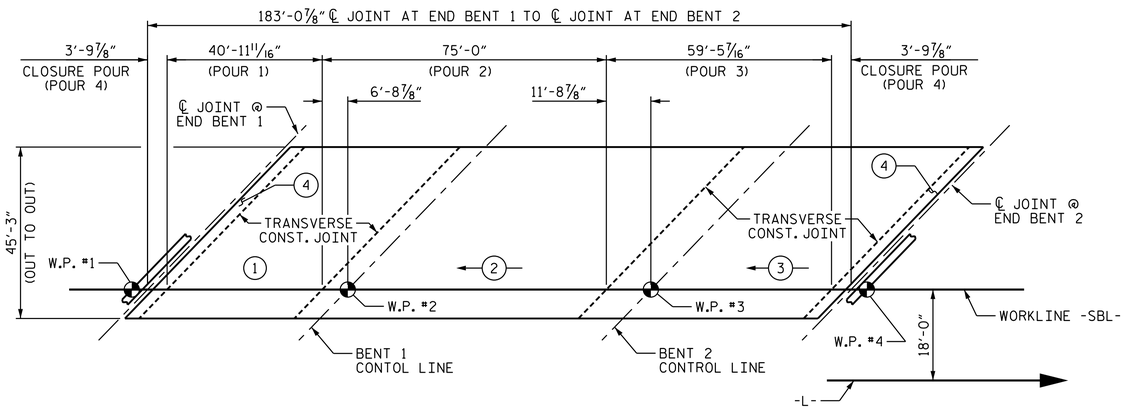

POURING SEQUENCE AND LAYOUT FOR COMPUTING AREA OF REINFORCED CONCRETE DECK SLAB

(CONTINUOUS FOR LIVE LOAD) (8284 SF)

(#) = INDICATES POUR NUMBER AND DIRECTION OF POUR

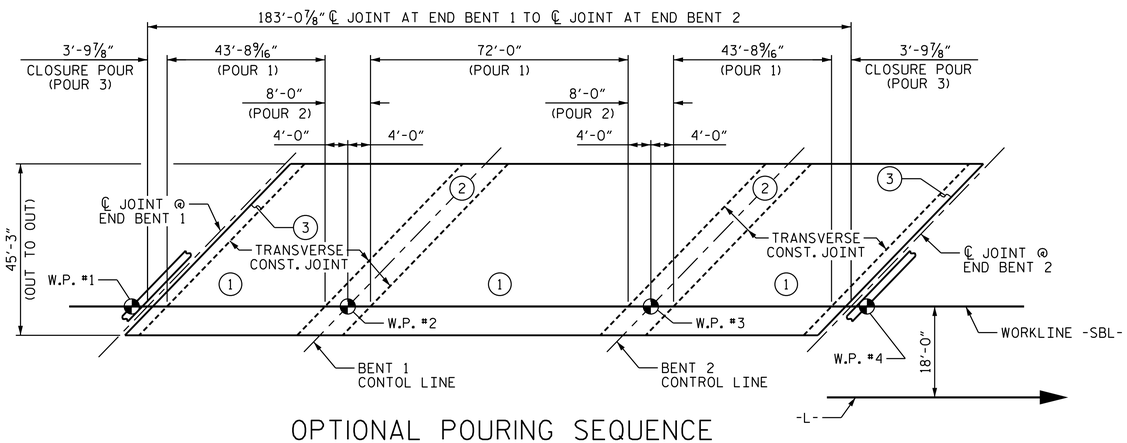

OPTIONAL POURING SEQUENCE

(CONTINUOUS FOR LIVE LOAD)

NOTE: POUR 2 CAN NOT BE STARTED UNTIL BOTH ADJACENT 1 POURS REACH A MINIMUM OF 3000 PSI.

GROOVING BRIDGE FLOORS		
APPROACH SLABS	2,768	SQ.FT.
BRIDGE DECK	7,078	SQ.FT.
TOTAL	9,846	SQ.FT.

BILL OF MATERIAL

BAR	NO.	SIZE	TYPE	LENGTH	WEIGHT	BAR	NO.	SIZE	TYPE	LENGTH	WEIGHT
* A1	278	#5	STR	44'-11"	13024	A213	4	#5	STR	31'-9"	132
A2	278	#5	STR	44'-11"	13024	A214	4	#5	STR	30'-9"	128
						A215	4	#5	STR	29'-9"	124
* A3	6	#6	STR	6'-10"	62	A216	4	#5	STR	28'-8"	120
* A101	4	#5	STR	44'-2"	184	A217	4	#5	STR	27'-8"	115
* A102	4	#5	STR	43'-2"	180	A218	4	#5	STR	26'-7"	111
* A103	4	#5	STR	42'-2"	176	A219	4	#5	STR	25'-7"	107
* A104	4	#5	STR	41'-1"	171	A220	4	#5	STR	24'-6"	102
* A105	4	#5	STR	40'-1"	167	A221	4	#5	STR	23'-6"	98
* A106	4	#5	STR	39'-0"	163	A222	4	#5	STR	22'-5"	94
* A107	4	#5	STR	38'-0"	159	A223	4	#5	STR	21'-5"	89
* A108	4	#5	STR	36'-11"	154	A224	4	#5	STR	20'-5"	85
* A109	4	#5	STR	35'-11"	150	A225	4	#5	STR	19'-4"	81
* A110	4	#5	STR	34'-11"	146	A226	4	#5	STR	18'-4"	76
* A111	4	#5	STR	33'-10"	141	A227	4	#5	STR	17'-3"	72
* A112	4	#5	STR	32'-10"	137	A228	4	#5	STR	16'-3"	68
* A113	4	#5	STR	31'-9"	132	A229	4	#5	STR	15'-2"	63
* A114	4	#5	STR	30'-9"	128	A230	4	#5	STR	14'-2"	59
* A115	4	#5	STR	29'-9"	124	A231	4	#5	STR	13'-2"	55
* A116	4	#5	STR	28'-8"	120	A232	4	#5	STR	12'-1"	50
* A117	4	#5	STR	27'-8"	115	A233	4	#5	STR	11'-1"	46
* A118	4	#5	STR	26'-7"	111	A234	4	#5	STR	10'-0"	42
* A119	4	#5	STR	25'-7"	107	A235	4	#5	STR	9'-0"	38
* A120	4	#5	STR	24'-6"	102	A236	4	#5	STR	7'-11"	33
* A121	4	#5	STR	23'-6"	98	A237	4	#5	STR	6'-11"	29
* A122	4	#5	STR	22'-5"	94	A238	4	#5	STR	5'-11"	25
* A123	4	#5	STR	21'-5"	89	A239	4	#5	STR	4'-10"	20
* A124	4	#5	STR	20'-5"	85	A240	4	#5	STR	3'-10"	16
* A125	4	#5	STR	19'-4"	81	A241	4	#5	STR	2'-9"	11
* A126	4	#5	STR	18'-4"	76						
* A127	4	#5	STR	17'-3"	72	* B1	124	#4	STR	17'-5"	1443
* A128	4	#5	STR	16'-3"	68	* B2	62	#7	STR	49'-6"	6273
* A129	4	#5	STR	15'-2"	63	* B3	60	#7	STR	19'-9"	2422
* A130	4	#5	STR	14'-2"	59	* B4	31	#4	STR	26'-0"	538
* A131	4	#5	STR	13'-2"	55	B5	224	#5	STR	47'-4"	11059
* A132	4	#5	STR	12'-1"	50						
* A133	4	#5	STR	11'-1"	46	* G1	4	#5	STR	32'-6"	136
* A134	4	#5	STR	10'-0"	42						
* A135	4	#5	STR	9'-0"	38	* J1	118	#4	8	1'-5"	112
* A136	4	#5	STR	7'-11"	33						
* A137	4	#5	STR	6'-11"	29	* K1	8	#8	1	14'-7"	312
* A138	4	#5	STR	5'-11"	25	* K2	12	#8	2	23'-4"	748
* A139	4	#5	STR	4'-10"	20	* K3	24	#6	STR	11'-0"	397
* A140	4	#5	STR	3'-10"	16	K4	32	#4	STR	11'-0"	235
* A141	4	#5	STR	2'-9"	11	K5	32	#4	STR	12'-0"	257
						K6	16	#4	STR	9'-6"	102
A201	4	#5	STR	44'-2"	184	K7	20	#4	6	8'-2"	109
A202	4	#5	STR	43'-2"	180	K8	30	#4	7	16'-1"	322
A203	4	#5	STR	42'-2"	176						
A204	4	#5	STR	41'-1"	171	* S1	64	#5	3	5'-5"	362
A205	4	#5	STR	40'-1"	167	* S2	64	#4	4	6'-3"	267
A206	4	#5	STR	39'-0"	163	S3	272	#4	5	3'-9"	681
A207	4	#5	STR	38'-0"	159						
A208	4	#5	STR	36'-11"	154	U1	16	#4	2	12'-10"	137
A209	4	#5	STR	35'-11"	150	U2	56	#4	2	14'-8"	549
A210	4	#5	STR	34'-11"	146	REINFORCING STEEL				LBS.	30,492
A211	4	#5	STR	33'-10"	141	* EPOXY COATED REINFORCING STEEL				LBS.	30,113
A212	4	#5	STR	32'-10"	137						

BAR TYPES

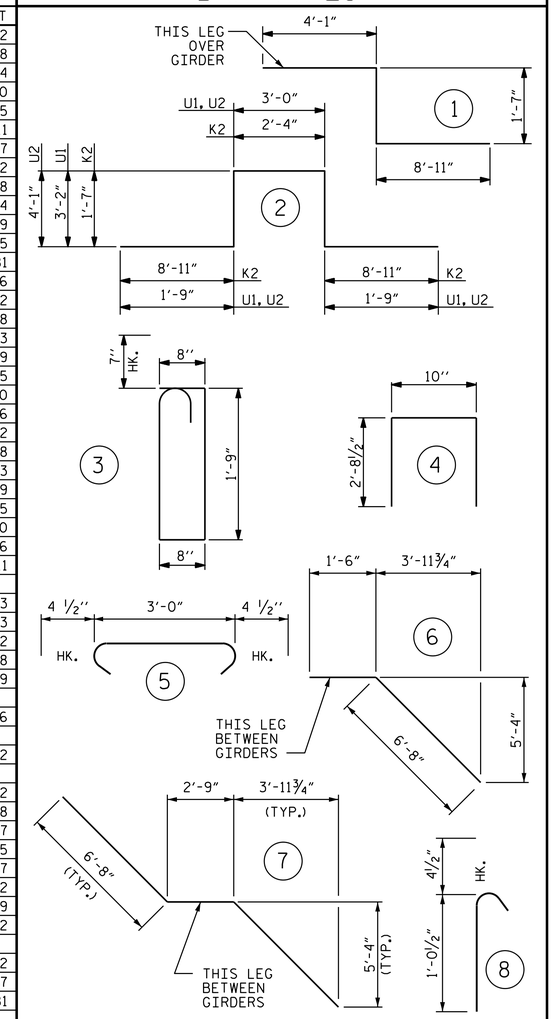

ALL BAR DIMENSIONS ARE OUT TO OUT

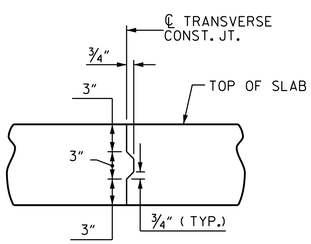

TRANSVERSE CONSTRUCTION JOINT DETAIL

NOTE: REINFORCING STEEL IN SLAB NOT SHOWN. LONGITUDINAL REINFORCING STEEL SHALL BE CONTINUOUS THRU JOINT

SUPERSTRUCTURE REINFORCING STEEL LENGTHS ARE BASED ON THE FOLLOWING MINIMUM SPLICE LENGTHS					
BAR SIZE	SUPERSTRUCTURE EXCEPT APPROACH SLABS, PARAPET, AND BARRIER RAIL		APPROACH SLABS		PARAPET AND BARRIER RAIL
	EPOXY COATED	UNCOATED	EPOXY COATED	UNCOATED	
#4	2'-0"	1'-9"	2'-0"	1'-9"	2'-9"
#5	2'-6"	2'-2"	2'-6"	2'-2"	3'-5"
#6	3'-0"	2'-7"	3'-10"	2'-7"	4'-4"
#7	5'-3"	3'-6"			
#8	6'-10"	4'-7"			

SUPERSTRUCTURE BILL OF MATERIAL

	CLASS AA CONCRETE	REINFORCING STEEL	EPOXY COATED REINFORCING STEEL
	(CU. YDS.)	(LBS.)	(LBS.)
SPANS	A, B, & C	30,492	30,113
POUR 1	60.9		
POUR 2	129.0		
POUR 3	106.9		
POUR 4	19.2		
TOTALS**	316.0	30,492	30,113

**QUANTITIES FOR BARRIER RAIL ARE NOT INCLUDED

PROJECT NO. I-0914BB
WARREN COUNTY
STATION: 197+54.33 -L-

STATE OF NORTH CAROLINA
DEPARTMENT OF TRANSPORTATION
RALEIGH

SUPERSTRUCTURE BILL OF MATERIAL

(SOUTHBOUND LANE)

REVISIONS							SHEET NO.
NO.	BY:	DATE:	NO.	BY:	DATE:		S-21
1			3				TOTAL SHEETS
2			4				72

PLANS PREPARED BY:
Hatch Mott MacDonald
PO Box 700 Fuquay-Varina, NC 27526
(919) 552-2253
www.hatchmott.com
LICENSE NO. F-0669

NORTH CAROLINA PROFESSIONAL SEAL 20532 ENGINEER JOHN E. MONDOLFI
9FD29B1FC2FB4DC... 10/17/2014

DRAWN BY:	J. T. WILLIAMS	DATE:	4-2014
CHECKED BY:	J. E. MONDOLFI	DATE:	4-2014
DESIGN ENGINEER OF RECORD:	J. E. MONDOLFI	DATE:	4-2014

w157077
R:\Structures_SBL\I0914BB_SMU_BM_SBL_01.dgn
10/17/2014 12:16:22 PM