DocuSign Envelope ID: 092FF86A-FF9F-4A0F-BAC7-07FE7A3BD109

F.A. PROJECT NO. IMS-085-4(117)224

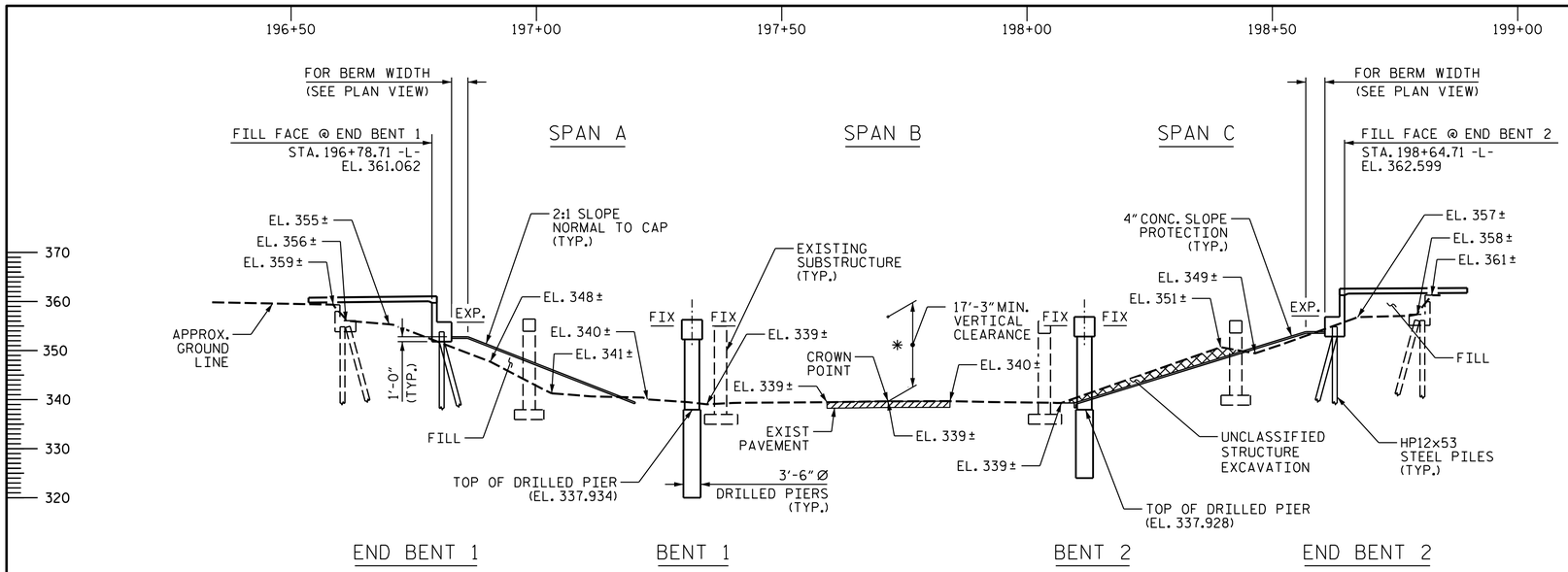

SECTION ALONG -SBL-

SECTIONS AT END BENTS AND BENTS ARE TAKEN AT RIGHT ANGLES

GRADE DATA -SBL-

(+)2.7618% (-)1.0975%

PI STA 197+70.00 -SBL-
EL. 367.65
VC = 1,180'

HORIZONTAL CURVE DATA -Y2-

PI STA 13+28.36 -Y2-
Δ = 5° 09' 01.0" (RT)
D = 1° 25' 56.6"
L = 359.56'
T = 179.90'
R = 4000.00'

* THE EXISTING PAVEMENT ELEVATION AND MINIMUM VERTICAL CLEARANCE SHOWN DOES NOT ACCOUNT FOR THE PROPOSED 1½" ASPHALT OVERLAY. AFTER COMPLETION OF THE PROJECT AND THE APPLICATION OF THE 1½" ASPHALT OVERLAY, THE ENGINEER SHOULD DETERMINE THE FINAL VERTICAL CLEARANCE AND MARK THE AS-BUILT PLANS ACCORDINGLY.

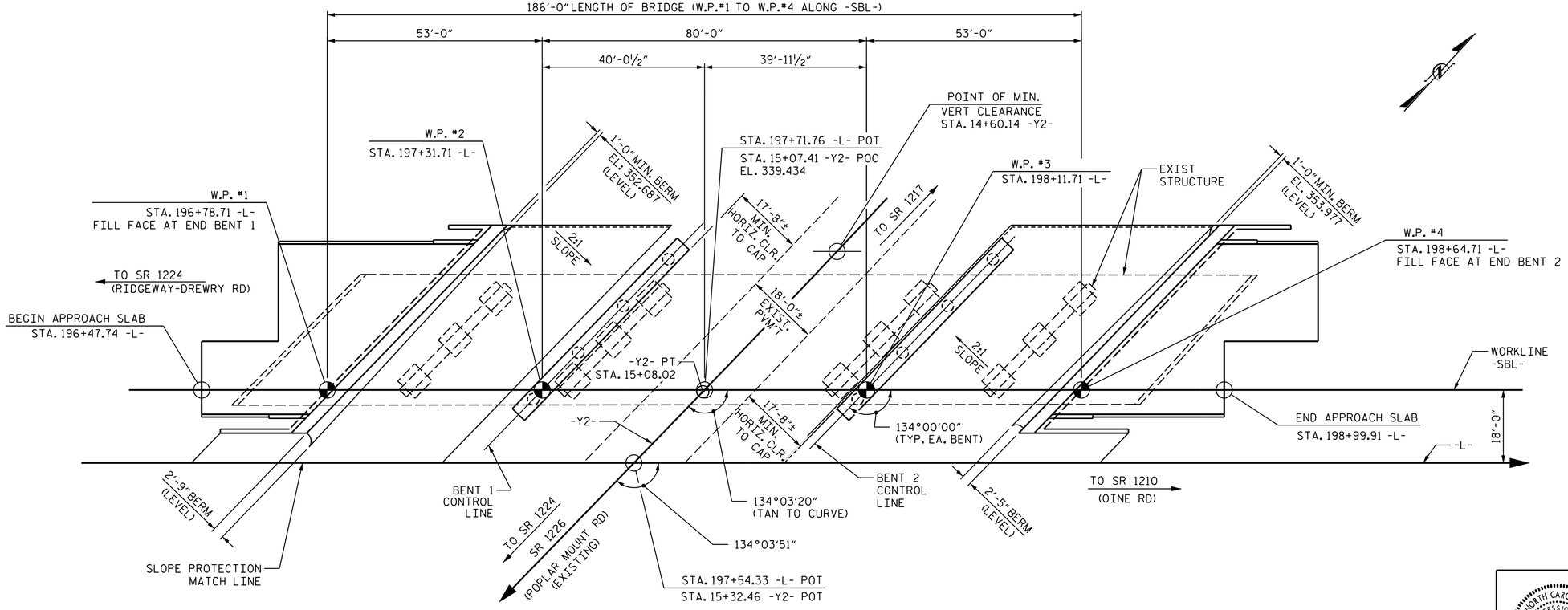

PLAN

FOUNDATIONS NOT SHOWN FOR CLARITY

PROJECT NO. I-0914BB
WARREN COUNTY
STATION: 197+54.33 -L- POT = 15+32.46 -Y2- POT

SHEET 1 OF 3 REPLACES BRIDGE NO. 49

STATE OF NORTH CAROLINA
DEPARTMENT OF TRANSPORTATION
RALEIGH

GENERAL DRAWING

BRIDGE ON I-85 OVER POPLAR MOUNT ROAD (SR 1226) BETWEEN SR 1224 & SR 1210 (SOUTHBOUND LANE)

REVISIONS								SHEET NO.
NO.	BY:	DATE:	NO.	BY:	DATE:			S-1
1			3					TOTAL SHEETS
2			4					72

PLANS PREPARED BY:
Hatch Mott MacDonald
P.O. Box 700
Fuquay-Varina, NC 27526
(919) 552-2253
www.hatchmott.com
LICENSE NO. F-0669

NORTH CAROLINA PROFESSIONAL SEAL 11915 ENGINEER
SADIAFSEROFIEVA 10/17/2014

DRAWN BY: J. T. WILLIAMS DATE: 6-2014
CHECKED BY: J. E. MONDOLFI DATE: 6-2014
DESIGN ENGINEER OF RECORD: J. C. FRYE DATE: 6-2014

w:\157077
R:\Structures_SBL\I0914BB_SMU_GD_SBL_01.dgn
9/11/2014 2:01:51 PM