PROJ. REFERENCE NO.	SHEET NO.
I-0914BB	TMP-26

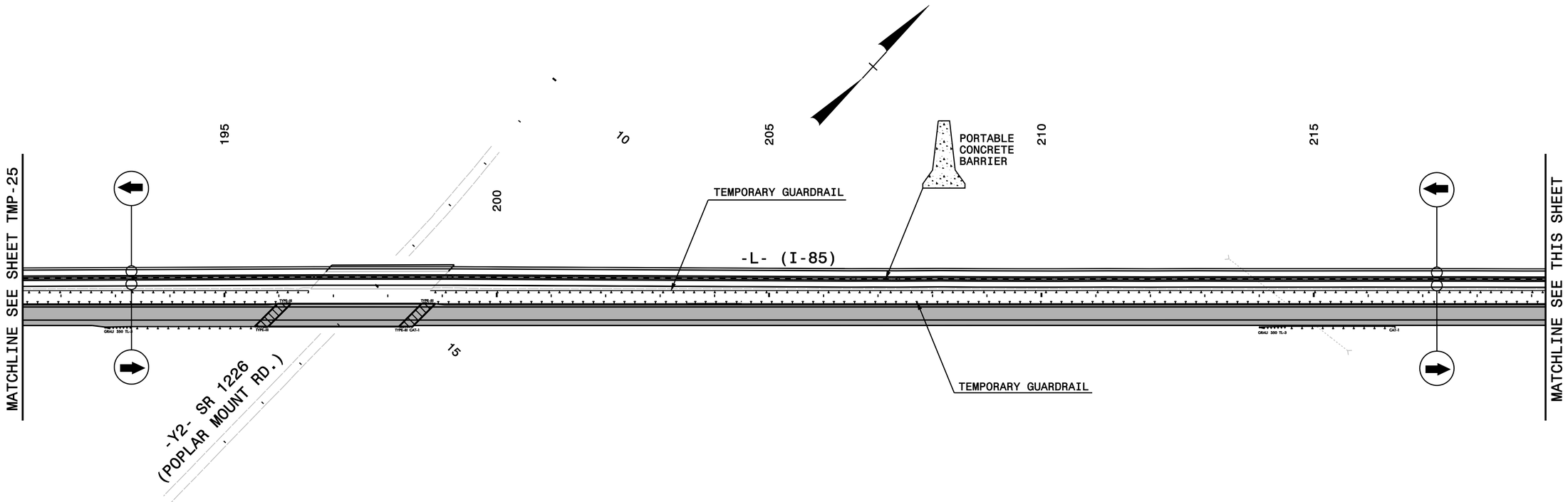

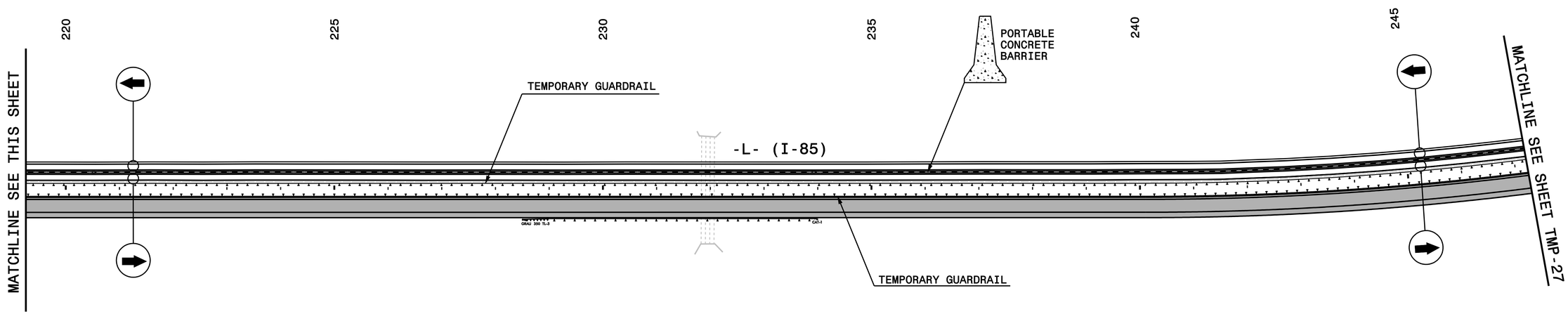

PLAN PREPARED IN THE OFFICE OF:

PROGRESSIVE DESIGN GROUP, INC.

ENGINEERS • CONSULTANTS

APPROVED: DocuSigned by: Tim Ilvey DATE: 11/4/2014

SEAL

NORTH CAROLINA PROFESSIONAL SEAL 025465 ENGINEER TIM ILVEY

DIVISION OF HIGHWAYS • STATE OF NORTH CAROLINA • DEPARTMENT OF TRANSPORTATION • WORK ZONE TRAFFIC CONTROL

TRANSPORTATION MANAGEMENT PLAN
PHASE II OVERVIEWS