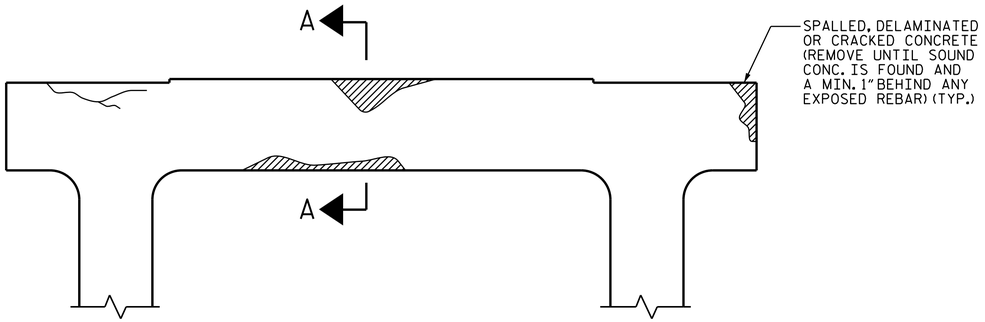

BENT CAP REPAIRS

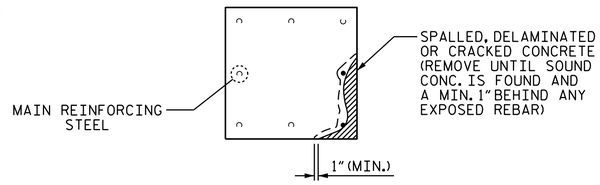

PLAN OF COLUMN

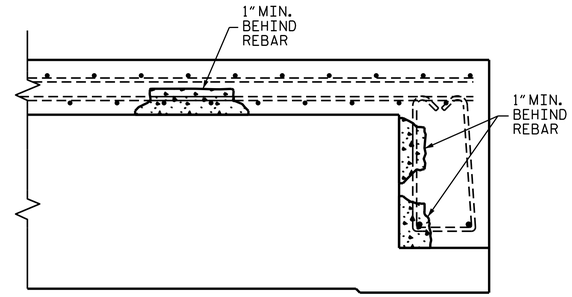

DECK AND GIRDER

SUPERSTRUCTURE REPAIR

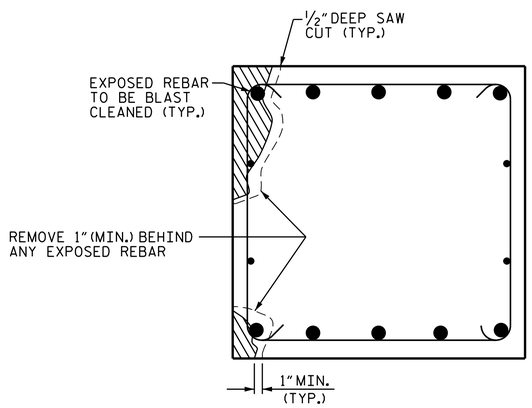

SECTION A-A

CAP REPAIR

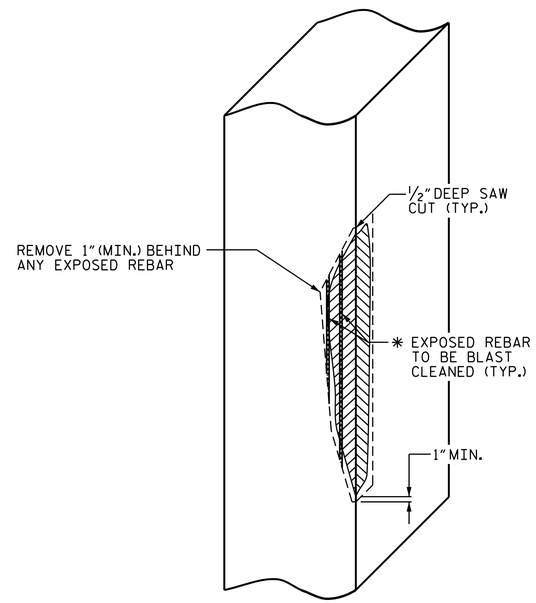

ELEVATION OF COLUMN

* DUE TO LACK OF CONFINEMENT, STEEL REPAIR LENGTH SHALL NOT EXCEED 10 FEET.

COLUMN REPAIR

PROJECT NO. I-0914BA
VANCE - WARREN COUNTY
BRIDGE NO. 54, 55, 57, 60, 64, 10

NORTH CAROLINA PROFESSIONAL SEAL 14855 ENGINEER DOUGLAS R. CALHOUN

DocuSigned by: Douglas R. Calhoun
430196F9D5E0429...
12/19/2014

NORTH CAROLINA PROFESSIONAL SEAL 29441 ENGINEER KRISTY W. ALFORD

DocuSigned by:
F245838930BF40E...
12/19/2014

STATE OF NORTH CAROLINA
DEPARTMENT OF TRANSPORTATION
RALEIGH

TYPICAL REPAIR DETAILS

REVISIONS						SHEET NO.
NO.	BY:	DATE:	NO.	BY:	DATE:	SP-2
1			3			TOTAL SHEETS
2			4			58

DRAWN BY : A. K. PATEL DATE : 10/13
CHECKED BY : Fr. LEA DATE : 3/14

19-DEC-2014 09:10
O:\Structures\Plans\Final Plans\I0914BA_SD_54.dgn
kalford