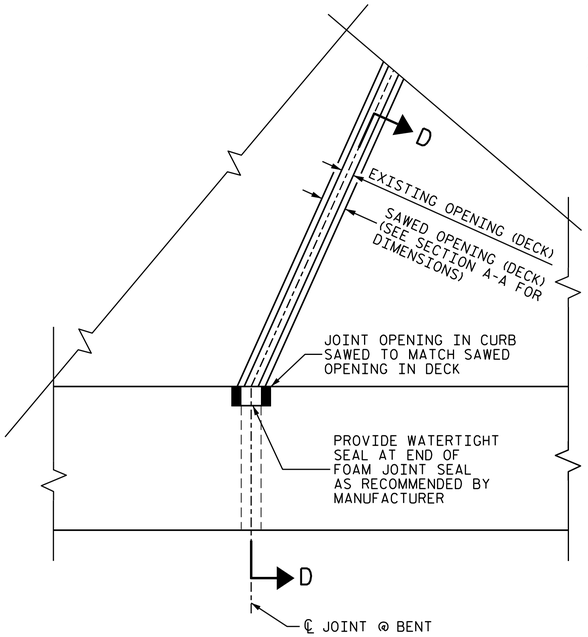

PLAN

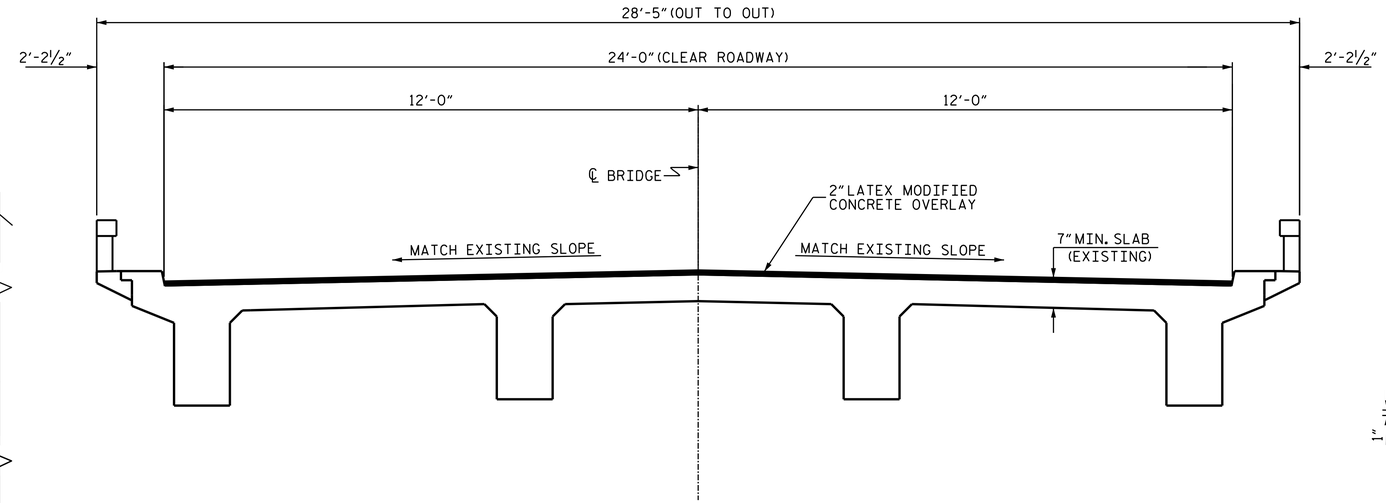

TYPICAL SECTION

NOTES

FOR FOAM JOINT SEALS, SEE SPECIAL PROVISIONS.

THE INSTALLED FOAM JOINT SEALS SHALL BE WATERTIGHT.

NOMINAL UNCOMPRESSED SEAL WIDTH OF FOAM JOINT SEAL SHALL BE 2" AT BENTS.

THE CONTRACTOR WILL NOT BE PERMITTED TO FORM THE JOINT FOR THE FOAM JOINT SEAL IN LIEU OF SAWING THE JOINT.

FOR ELASTOMERIC CONCRETE, SEE SPECIAL PROVISIONS.

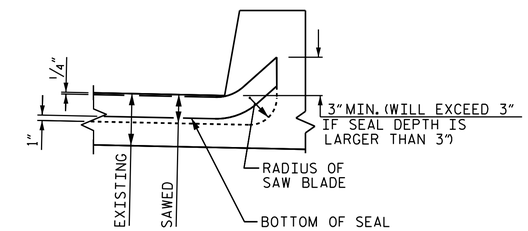

SECTION D-D

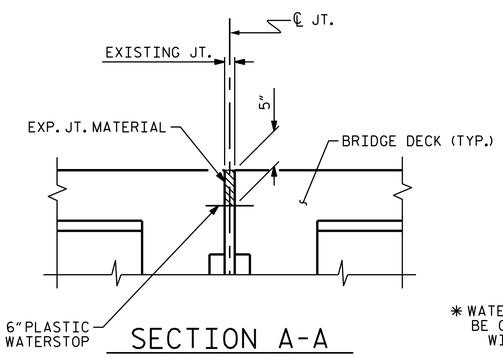

SECTION A-A
(EXISTING JOINT)

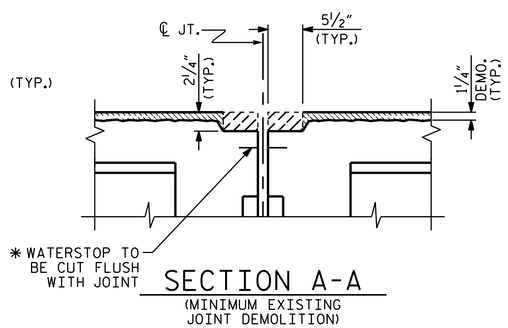

SECTION A-A
(MINIMUM EXISTING JOINT DEMOLITION)

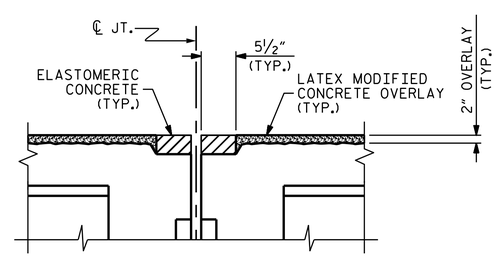

SECTION A-A
(PROPOSED FOAM JOINT SEAL PRE-SAWED DIMENSIONS)

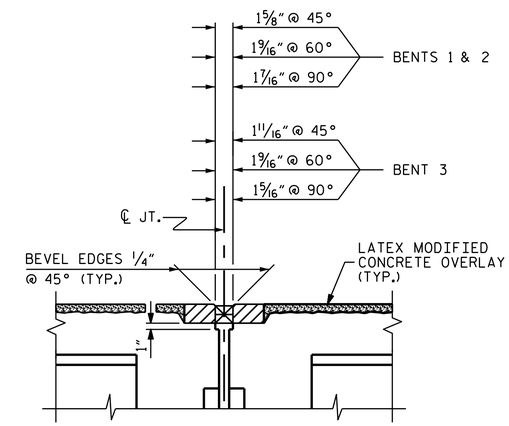

SECTION A-A
(PROPOSED FOAM JOINT SEAL EXPANSION)

* ALL LOOSE AND UNSOUND CONCRETE SHALL BE REMOVED. IF THE EMBEDDED PORTION OF THE EXISTING WATERSTOP IS EXPOSED DURING REMOVAL, THE ENTIRE WATERSTOP SHALL BE REMOVED.

JOINT INSTALLATION SEQUENCE AT BENTS

ELASTOMERIC CONCRETE		
BENTS	13.6	(CU. FT.)
* TOTAL	13.6	(CU. FT.)

* BASED ON THE MINIMUM BLOCKOUT SHOWN.

PROJECT NO. I-0914BA
VANCE COUNTY
BRIDGE NO. 60
SHEET 3 OF 3

STATE OF NORTH CAROLINA
DEPARTMENT OF TRANSPORTATION
RALEIGH

TYPICAL SECTION & JOINT DETAILS

NORTH CAROLINA PROFESSIONAL SEAL 14855 ENGINEER DOUGLAS R. CALHOUN

DocuSigned by: Douglas R. Calhoun
430196F9D5ED429...
12/19/2014

REVISIONS								SHEET NO.
NO.	BY:	DATE:	NO.	BY:	DATE:			SP-34
1			3					TOTAL SHEETS
2			4					58

DRAWN BY : D. SHACKELFORD DATE : 02/2014
CHECKED BY : Fr. LEA DATE : 02/2014

19-DEC-2014 10:27
0:\Structures\Plans\Final Plans\I0914BA_SD_60.dgn
kalford