PLAN - TOP

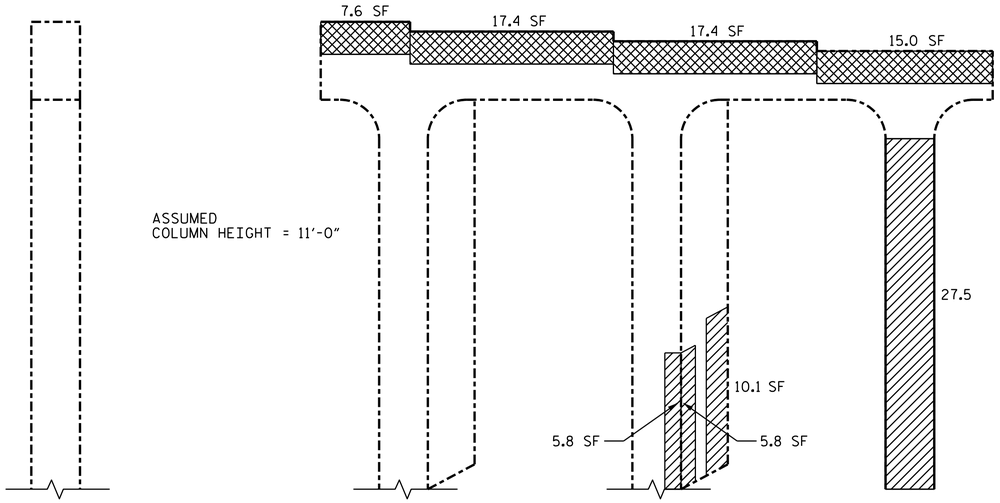

WEST FACE

SOUTH FACE

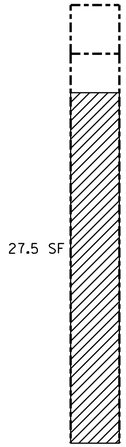

EAST FACE

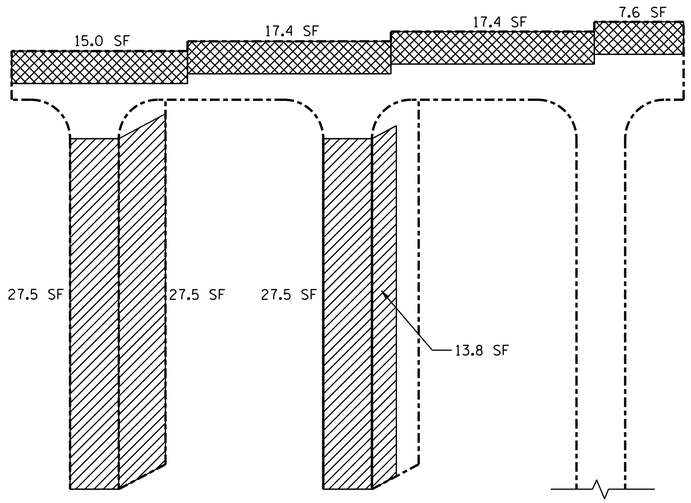

NORTH FACE

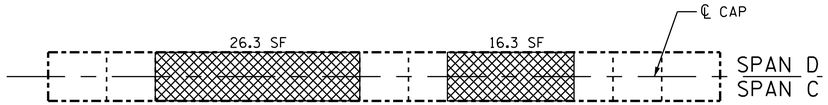

PLAN - BOTTOM

REPAIR QUANTITY TABLE				
REPAIRS BENT 3	QUANTITIES			
	ESTIMATE		ACTUAL	
SHOTCRETE REPAIRS	AREA SF.	VOLUME CF.	AREA SF.	VOLUME CF.
CAP (VERTICAL FACE)	0	0		
CAP (HORIZONTAL FACE)	0	0		
COLUMN (VERTICAL FACE)	173.0	57.6		
CONCRETE REPAIRS	243.7	81.2		
EPOXY RESIN INJECTION		LN. FT.		LN. FT.
CAP		0		
COLUMN		0		
EPOXY COATING		SQ. FT.		SQ. FT.
TOP OF CAP		86		

VALUES IN CHART REPRESENT ESTIMATED REPAIR TOTALS AFTER REMOVAL OF UNSOUND CONCRETE, MIN. OF 1" BEHIND REBAR AND MIN. 1" CL TO SAWCUT. SEE REPAIR DETAILS.

CONCRETE REPAIR

SHOTCRETE REPAIR

ERI - EPOXY RESIN INJECTION

NOTE

REPAIR LOCATIONS AND ESTIMATE OF QUANTITIES ARE GIVEN WITH THE BEST INFORMATION AVAILABLE. IF ADDITIONAL REPAIRS NOT SHOWN ON THE DRAWINGS ARE DEEMED NECESSARY BY THE ENGINEER, THE ENGINEER SHALL NOTE ON THE DRAWINGS THE APPROXIMATE LOCATION AND DESCRIPTION OF THE REPAIRS AND ADJUST THE ACTUAL QUANTITIES ENTERED INTO THE REPAIR QUANTITY TABLE.

FOR STRUCTURE REPAIRS, SEE "TYPICAL REPAIR DETAILS" SHEET.

EPOXY COATING SHALL BE APPLIED TO THE TOP FACE OF THE BENT CAPS AND ENDS OF GIRDERS.

NORTH CAROLINA PROFESSIONAL SEAL 29441 ENGINEER KRISTY W. ALFORD

DocuSigned by:
F245838930BF40E...
12/19/2014

PROJECT NO. I-0914BA
VANCE COUNTY
BRIDGE NO. 57

SHEET 3 OF 4

STATE OF NORTH CAROLINA
DEPARTMENT OF TRANSPORTATION
RALEIGH

SUBSTRUCTURE REPAIRS

BENT 3

REVISIONS						SHEET NO.
NO.	BY:	DATE:	NO.	BY:	DATE:	SP-30
1			3			TOTAL SHEETS
2			4			58

DRAWN BY : Fr. Lea DATE : 6/7/13
CHECKED BY : P.K. NEWTON DATE : 6/27/13

19-DEC-2014 10:26
O:\Structures\Plans\Final Plans\I0914BA_SD_57.dgn
kalford