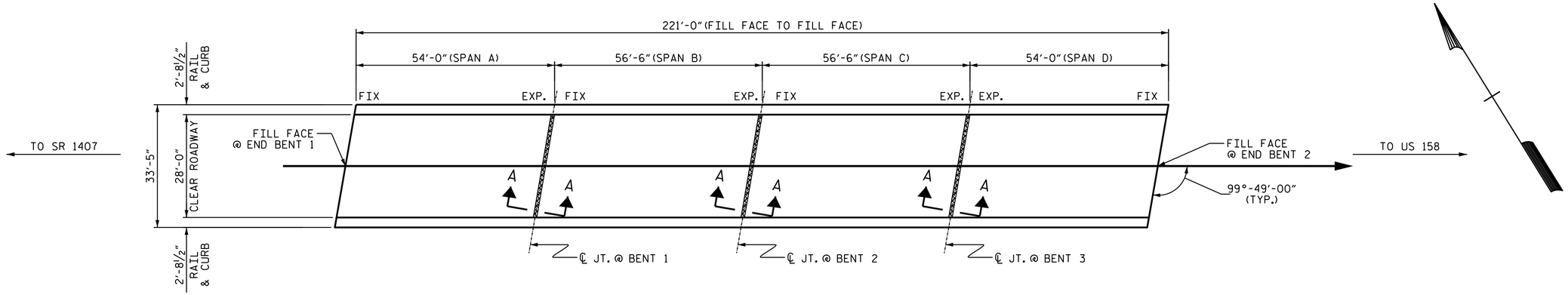

PLAN OF SPANS

FOR SECTION A-A, SEE SHEET 3 OF 3.

BRIDGE JOINT DEMOLITION

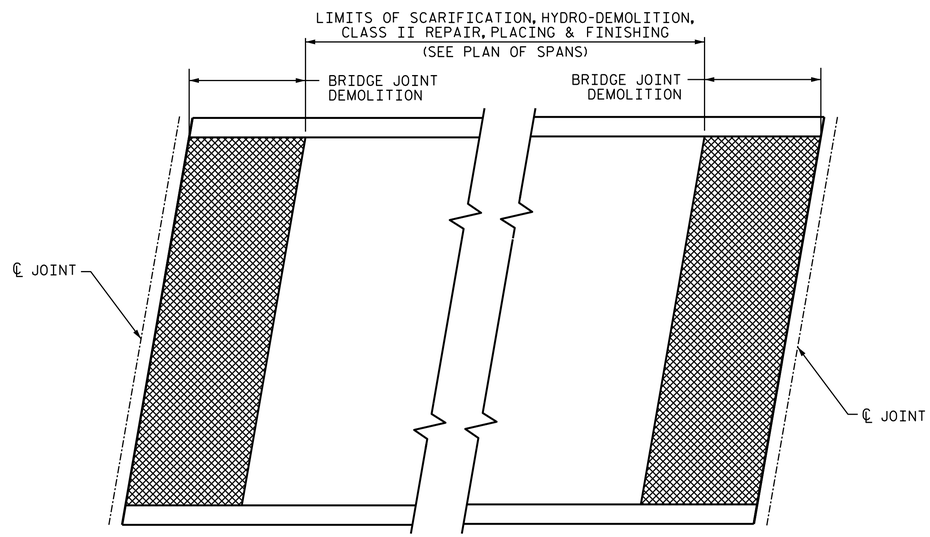

PLAN

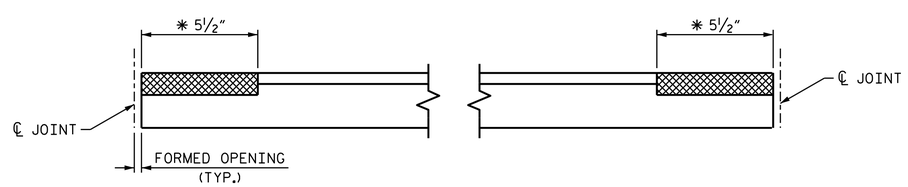

ELEVATION

* DIMENSION MEASURED PERPENDICULAR TO JOINT

BRIDGE JOINT DEMOLITION

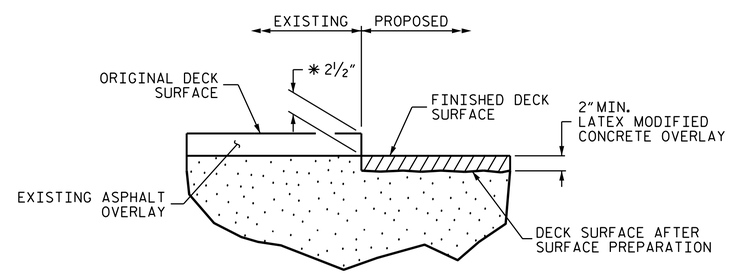

DETAIL FOR LATEX MODIFIED CONCRETE OVERLAY

* ASSUMES 2½" EXISTING ASPHALT OVERLAY ON THE BRIDGE. THE CONTRACTOR SHALL CONFIRM EXISTING ASPHALT THICKNESS AND ADJUST AS NECESSARY.

PROJECT NO. I-0914BA

VANCE COUNTY

BRIDGE NO. 54

SHEET 1 OF 3

NORTH CAROLINA PROFESSIONAL SEAL 29441 ENGINEER KRISTY W. ALFORD

DocuSigned by: F245838930BF40E...

12/19/2014

STATE OF NORTH CAROLINA
DEPARTMENT OF TRANSPORTATION
RALEIGH

PLAN VIEW OF BRIDGE 54 ON SR 1312 OVER I-85

REVISIONS						SHEET NO.
NO.	BY:	DATE:	NO.	BY:	DATE:	SP-3
1			3			TOTAL SHEETS
2			4			58

DRAWN BY : D. SHACKELFORD DATE : 1/2014

CHECKED BY : Fr. LEA DATE : 1/2014

19-DEC-2014 09:10
O:\Structures\Plans\Final Plans\I0914BA_SD_54.dgn
kalford