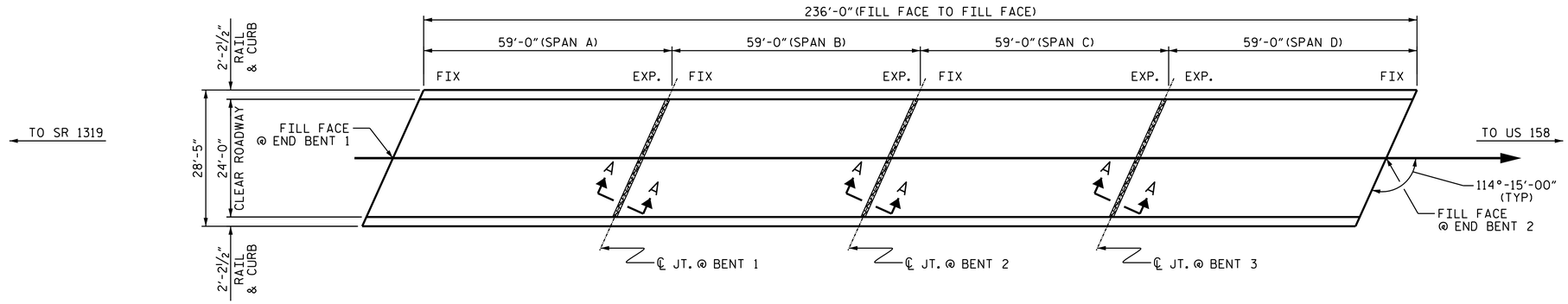

PLAN OF SPANS

FOR SECTION A-A, SEE SHEET 3 OF 3

BRIDGE JOINT DEMOLITION

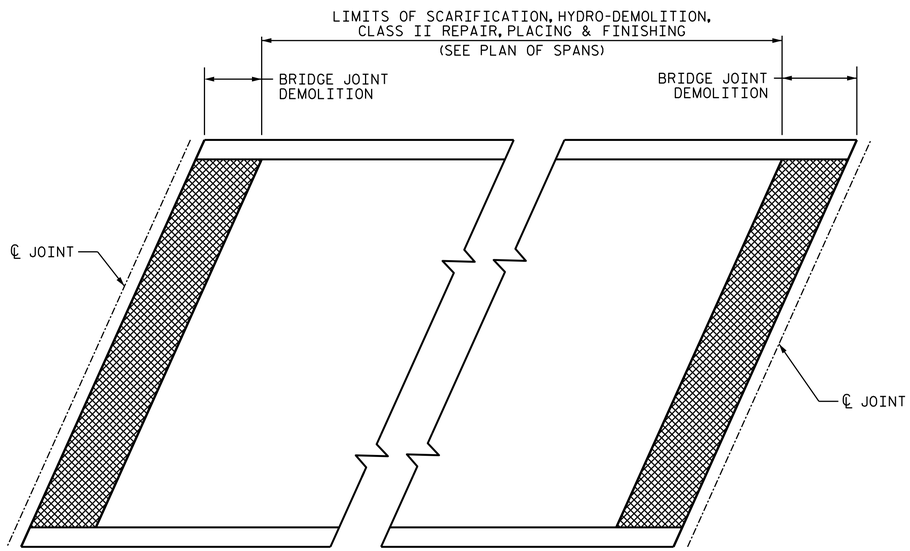

PLAN

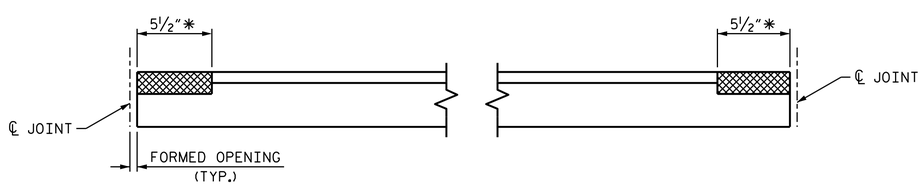

ELEVATION

* DIMENSION MEASURED PERPENDICULAR TO JOINT

BRIDGE JOINT DEMOLITION

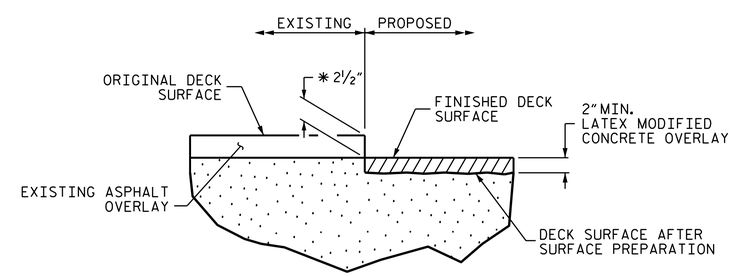

DETAIL FOR LATEX MODIFIED CONCRETE OVERLAY

* ASSUMES 2½" EXISTING ASPHALT OVERLAY ON THE BRIDGE. THE CONTRACTOR SHALL CONFIRM EXISTING ASPHALT THICKNESS AND ADJUST AS NECESSARY.

PROJECT NO. I-0914BA

VANCE COUNTY

BRIDGE NO. 60

SHEET 1 OF 3

STATE OF NORTH CAROLINA
DEPARTMENT OF TRANSPORTATION
RALEIGH

PLAN VIEW OF BRIDGE 60 ON SR 1322 OVER I-85

NORTH CAROLINA PROFESSIONAL SEAL 14855 ENGINEER DOUGLAS R. CALHOUN

DocuSigned by: Douglas R. Calhoun
430196F9D0E0429...
12/19/2014

REVISIONS						SHEET NO.
NO.	BY:	DATE:	NO.	BY:	DATE:	SP-32
1			3			TOTAL SHEETS
2			4			58

DRAWN BY : D. SHACKELFORD DATE : 02/2014

CHECKED BY : Fr. LEA DATE : 02/2014

19-DEC-2014 10:26
O:\Structures\Plans\FinalPlans\I0914BA_SD_60.dgn
kalford