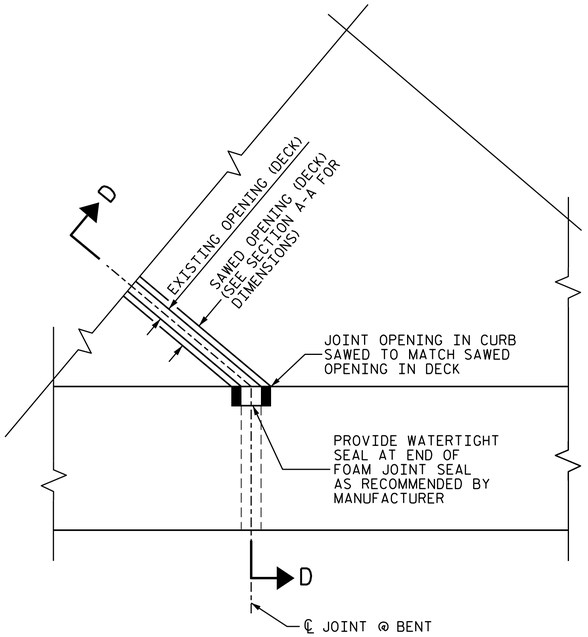

PLAN

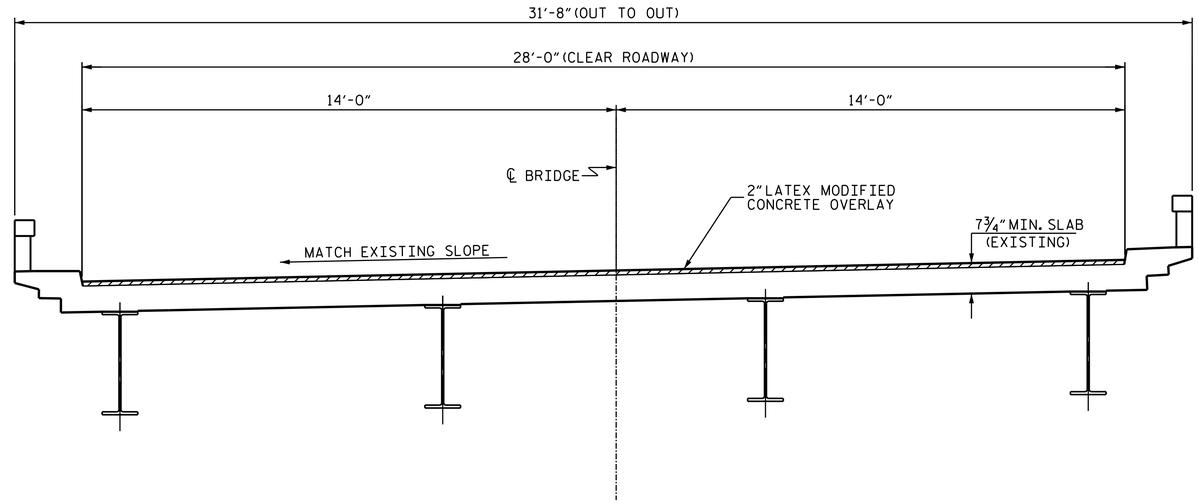

TYPICAL SECTION

NOTES

FOR FOAM JOINT SEALS, SEE SPECIAL PROVISIONS.

THE INSTALLED FOAM JOINT SEALS SHALL BE WATERTIGHT.

NOMINAL UNCOMPRESSED SEAL WIDTH OF FOAM JOINT SEAL SHALL BE 2" AT BENTS.

THE CONTRACTOR WILL NOT BE PERMITTED TO FORM THE JOINT FOR THE FOAM JOINT SEAL IN LIEU OF SAWING THE JOINT.

FOR ELASTOMERIC CONCRETE, SEE SPECIAL PROVISIONS.

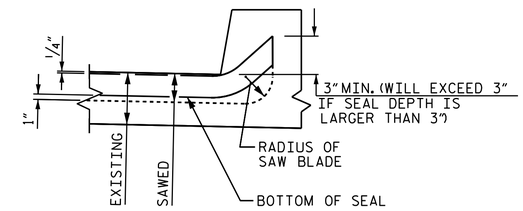

SECTION D-D

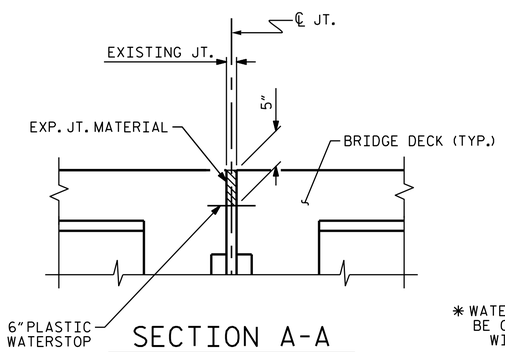

SECTION A-A
(EXISTING JOINT)

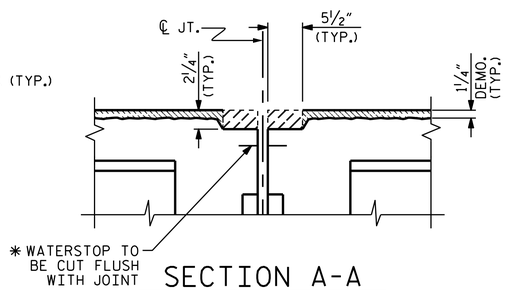

SECTION A-A
(MINIMUM EXISTING JOINT DEMOLITION)

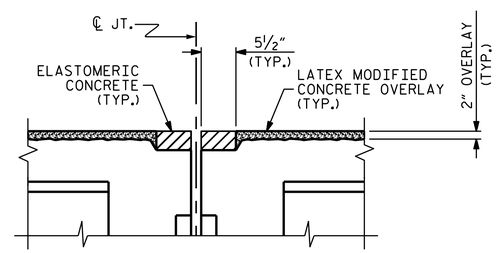

SECTION A-A
(PROPOSED FOAM JOINT SEAL PRE-SAWED DIMENSIONS)

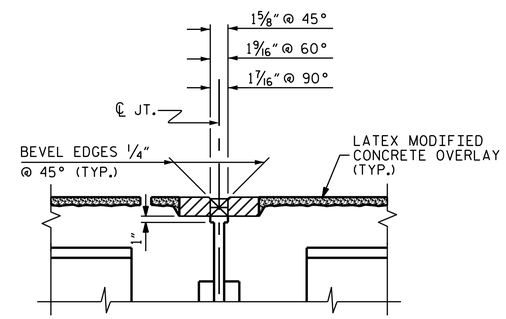

SECTION A-A
(PROPOSED FOAM JOINT SEAL EXPANSION)

* ALL LOOSE AND UNSOUND CONCRETE SHALL BE REMOVED. IF THE EMBEDDED PORTION OF THE EXISTING WATERSTOP IS EXPOSED DURING REMOVAL, THE ENTIRE WATERSTOP SHALL BE REMOVED.

JOINT INSTALLATION SEQUENCE AT BENTS

ELASTOMERIC CONCRETE		
BENTS	25.1	(CU. FT.)
* TOTAL	25.1	(CU. FT.)

* BASED ON THE MINIMUM BLOCKOUT SHOWN.

NORTH CAROLINA PROFESSIONAL SEAL 29441 ENGINEER KEITH W. ALFORD

DocuSigned by: F2458389308F40E...
12/19/2014

PROJECT NO. I-0914BA
VANCE COUNTY
BRIDGE NO. 57

SHEET 3 OF 3

STATE OF NORTH CAROLINA
DEPARTMENT OF TRANSPORTATION
RALEIGH

TYPICAL SECTION & JOINT DETAILS

REVISIONS							
NO.	BY:	DATE:	NO.	BY:	DATE:	SHEET NO.	
1			3			SP-23	
2			4			TOTAL SHEETS	
						58	

DRAWN BY : Fr. LEA DATE : 1/2014
CHECKED BY : D. SHACKELFORD DATE : 1/2014

19-DEC-2014 10:26
0:\Structures\Plans\Final Plans\I0914BA_SD_57.dgn
kalford