TIP NO.	SHEET NO.
I-0914BA	SIGN-2F

APPROVED: DocuSigned by: Ronald W. King 0695D7A9577C4DC...

DATE: 2/11/2015

SEAL

NORTH CAROLINA PROFESSIONAL SEAL 022959 ENGINEER RONALD W. KING

STATE OF NORTH CAROLINA
DEPT. OF TRANSPORTATION
DIVISION OF HIGHWAYS
RALEIGH, N.C.

1-12

ENGLISH STANDARD DRAWING FOR

GROUND MOUNTED SIGN SUPPORTS

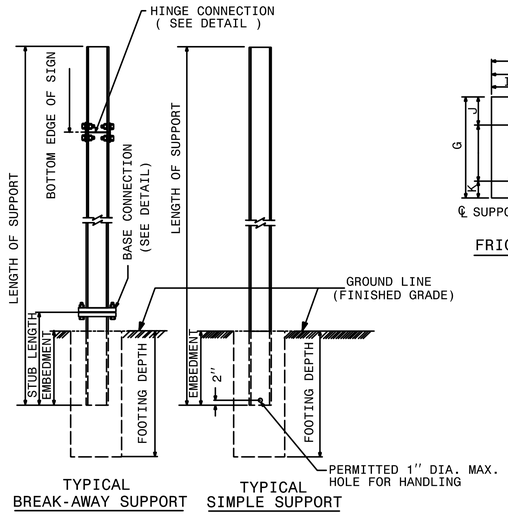

TYPICAL BREAK-AWAY SUPPORT

TYPICAL SIMPLE SUPPORT

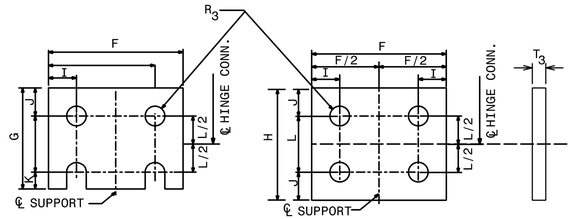

FRICTION ℄ DETAIL

HINGE ℄ DETAIL

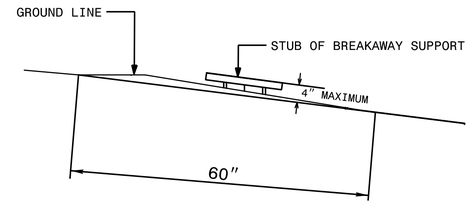

STUB HEIGHT REQUIREMENTS

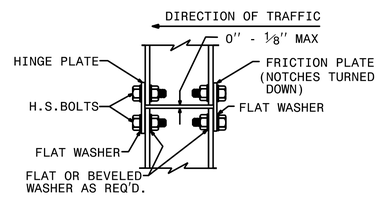

HINGE CONNECTION

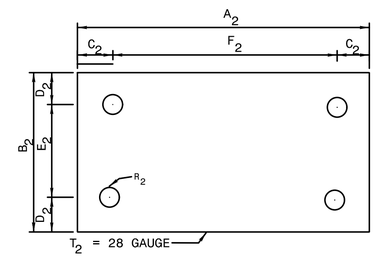

KEEPER PLATE

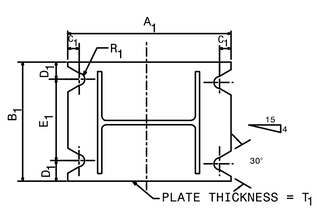

SLIP BASE PLATE

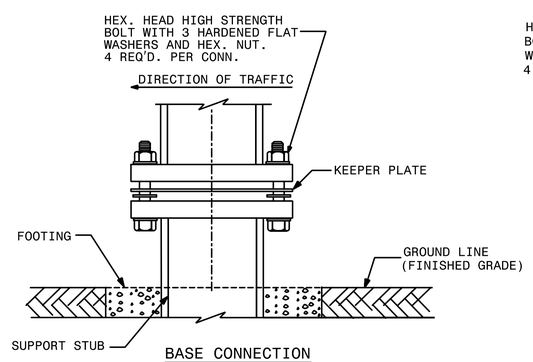

BASE CONNECTION

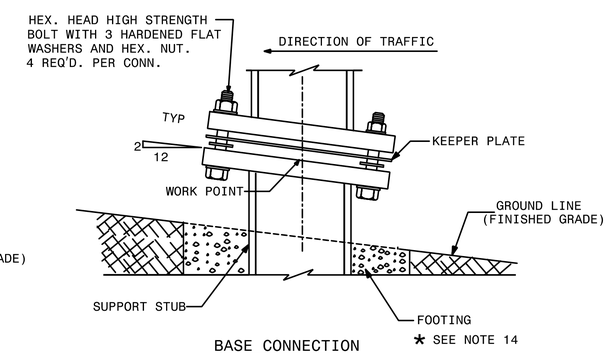

BASE CONNECTION

SEE SHEET 2 OF 3 FOR
BASE CONNECTION DATA
HINGE CONNECTION DATA
& FOUNDATION DATA.
SEE SHEET 3 OF 3 FOR
GENERAL NOTES.

SHEET 1 OF 3

903D10

STATE OF NORTH CAROLINA
DEPT. OF TRANSPORTATION
DIVISION OF HIGHWAYS
RALEIGH, N.C.

1-12

ENGLISH STANDARD DRAWING FOR

GROUND MOUNTED SIGN SUPPORTS

SHEET 1 OF 3

903D10

REVISED SIGNING
ROADWAY STANDARD DRAWING