TIP NO.	SHEET NO.
I-0914BA	SIGN-5

APPROVED: DocuSigned by: Charles A. Johnson, III 59A15658B47F54A8...

DATE: 11/4/2014

SEAL

NORTH CAROLINA PROFESSIONAL SEAL 20675 ENGINEER CHARLES A. JOHNSON III

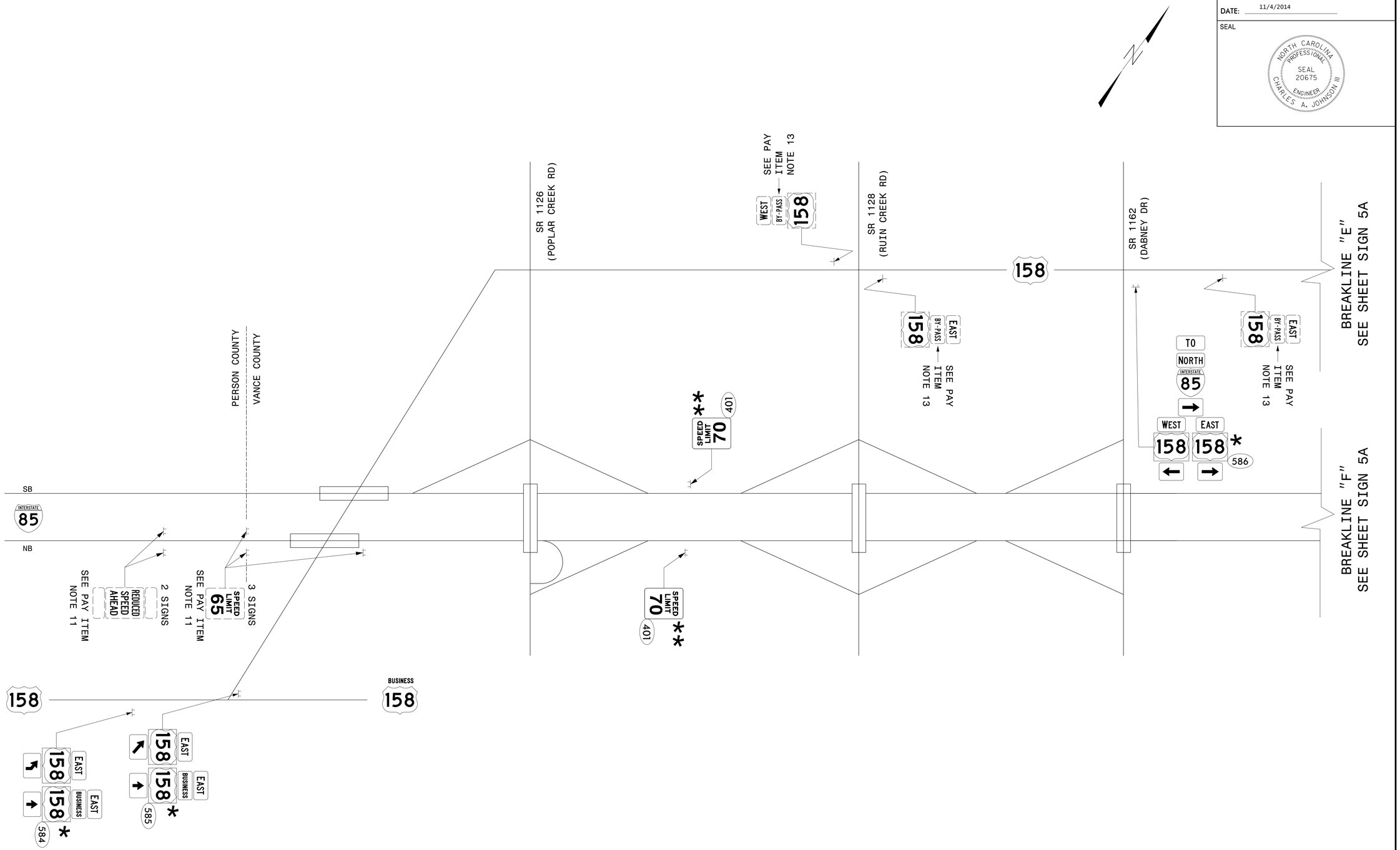

* REMOVE EXISTING F-ASSEMBLY AND INSTALL NEW F-ASSEMBLY.
SEE PAY ITEM NOTES 3,11.

** REMOVE EXISTING E-SIGN AND INSTALL NEW E-SIGN.
SEE PAY ITEM NOTES 3,11.

HNTB
HNTB NORTH CAROLINA, P.C.
343 E. Six Forks Road, Suite 200
Raleigh, North Carolina 27609
NC License No: C-1554

EXISTING AND PROPOSED SIGNS I-85 / US-158