5/14/99

PROJECT REFERENCE NO.	SHEET NO.
W-5107	UC-18
DESIGNED BY: EWH	
DRAWN BY: EWH	
CHECKED BY: RBW	
APPROVED BY: RBW	
REVISED:	
NORTH CAROLINA DEPARTMENT OF TRANSPORTATION	
UTILITIES ENGINEERING SEC. PHONE:(919)707-6690 FAX:(919)250-4151	UTILITY CONSTRUCTION PLANS ONLY

NORTH CAROLINA PROFESSIONAL SEAL 10157 ENGINEER RONALD B. WILKINS
DocuSigned by: Ron Wilkins 11/5/2014

UTILITY CONSTRUCTION

UTILITY PLAN NOTES AND SPECIAL DETAILS

GENERAL UTILITY CONSTRUCTION NOTES:

1. ALL WATER LINES SHALL BE INSTALLED WITHIN COMPLIANCE OF THE RULES AND REGULATIONS OF THE NORTH CAROLINA DEPARTMENT OF ENVIRONMENTAL AND NATURAL RESOURCES, PUBLIC WATER SUPPLY SECTION.
2. THE UTILITY OWNERS WILL OWN THE NEW (RELOCATED) FACILITIES AFTER ACCEPTANCE BY THE DEPARTMENT. THE DEPARTMENT OWNS THE CONSTRUCTION CONTRACT AND HAS ADMINISTRATIVE AUTHORITY. COMMUNICATIONS AND DECISIONS BETWEEN THE CONTRACTOR AND UTILITY OWNER ARE NOT BINDING UPON THE DEPARTMENT OR THIS CONTRACT UNLESS AUTHORIZED BY THE ENGINEER. AGREEMENTS BETWEEN THE UTILITY OWNER AND CONTRACTOR FOR THE WORK THAT IS NOT PART OF THIS CONTRACT OR IS SECONDARY TO THIS CONTRACT ARE ALLOWED, BUT ARE NOT BINDING UPON THE DEPARTMENT.
3. PROVIDE ACCESS FOR THE DEPARTMENT PERSONNEL AND THE OWNER'S REPRESENTATIVES TO ALL PHASES OF CONSTRUCTION. NOTIFY DEPARTMENT PERSONNEL AND THE UTILITY OWNER TWO WEEKS PRIOR TO COMMENCEMENT OF ANY WORK AND ONE WEEK PRIOR TO SERVICE INTERRUPTION. KEEP UTILITY OWNERS' REPRESENTATIVES INFORMED OF WORK PROGRESS AND PROVIDE OPPORTUNITY FOR INSPECTION OF CONSTRUCTION AND TESTING.
4. THE PLANS DEPICT THE BEST AVAILABLE INFORMATION FOR THE LOCATION, SIZE, AND MATERIAL TYPE OF EXISTING UTILITIES. MAKE INVESTIGATIONS FOR DETERMINING THE EXACT LOCATION, SIZE, AND TYPE OF MATERIAL OF THE EXISTING FACILITIES AS NECESSARY FOR CONSTRUCTION OF THE PROPOSED UTILITIES AND FOR AVOIDING DAMAGE TO EXISTING FACILITIES. REPAIR ANY DAMAGE INCURRED TO EXISTING FACILITIES TO THE ORIGINAL OR BETTER CONDITION AT NO ADDITIONAL COST TO THE DEPARTMENT.
5. MAKE FINAL CONNECTIONS OF THE NEW WORK TO THE EXISTING SYSTEM WHERE INDICATED ON THE PLANS, AS REQUIRED TO FIT THE ACTUAL CONDITIONS, OR AS DIRECTED.
6. MAKE CONNECTIONS BETWEEN EXISTING AND PROPOSED UTILITIES AT TIMES MOST CONVENIENT TO THE PUBLIC WITHOUT ENDANGERING THE UTILITY SERVICE AND IN ACCORDANCE WITH THE UTILITY OWNER'S REQUIREMENTS. MAKE CONNECTIONS ON WEEKENDS, AT NIGHT, AND ON HOLIDAYS IF NECESSARY.
7. ALL UTILITY MATERIALS SHALL BE APPROVED PRIOR TO DELIVERY TO THE PROJECT. SEE NCDOT SPECIFICATION 1500-7 "SUBMITTALS AND RECORDS."
8. THE CONTRACTOR'S ATTENTION IS DIRECTED TO SECTIONS 102, 107, AND 1550 OF THE STANDARD SPECIFICATIONS CONCERNING TRENCHLESS INSTALLATION. IT IS THE CONTRACTOR'S RESPONSIBILITY TO HAVE BORE PATH DESIGNED AND SEALED BY A LICENSED NORTH CAROLINA PROFESSIONAL ENGINEER. NO DAMAGE IS ALLOWED TO RIVER, WETLANDS, OR BUFFER ZONES.

PROJECT SPECIFIC NOTES:

THE MATERIALS AND METHODS USED IN THE CONSTRUCTION OF WATER DISTRIBUTION FACILITIES FOR THIS PROJECT SHALL CONFORM TO SPECIFICATIONS ESTABLISHED BY UTILITY OWNERS (JOHNSTON COUNTY, TOWN OF PINE LEVEL) AND NCDOT, WHICHEVER IS MOST STRINGENT. THE FOLLOWING NOTES EMPHASIZE ONLY MAIN POINTS OF THE SPECIFICATIONS COVERING THIS PROJECT. CONTRACTOR IS ADVISED TO OBTAIN THE COMPLETE SPECIFICATIONS FOR REFERENCE.
JOHNSTON COUNTY SPECIFICATIONS: "HTTP://WWW.JOHNSTONNC.COM/FILES/UTILS/STDS/SEC1WATERMAINS2011.PDF"
NCDOT SPECIFICATIONS: "HTTPS://CONNECT.NCDOT.GOV/RESOURCES/SPECIFICATIONS/PAGES/SPECIFICATIONS-AND-SPECIAL-PROVISIONS.ASPX"

1. 4", 6", AND 8" DIAMETER WATER MAIN PIPE SHALL BE MADE OF DUCTILE IRON CONFORMING TO ANSI A21.50 AND ANSI A21.51 (AWWA C151) AND SHALL BE INSTALLED WITH 3.0' (MINIMUM) COVER.
2. 12" DIAMETER WATER MAIN PIPE SHALL BE MADE OF DUCTILE IRON CONFORMING TO ANSI A21.50 AND ANSI A21.51 (AWWA C151) AND SHALL BE INSTALLED WITH 3.5' (MINIMUM) COVER.
3. HDPE PIPE SHALL BE USED FOR HDD (HORIZONTAL DIRECTIONAL DRILL) INSTALLATIONS. HDPE PIPE SHALL HAVE A WALL DIMENSION RATING OF DR11 OR HEAVIER WITH MINIMUM PRESSURE CLASS OF 200 PSI. THE INTERIOR DIAMETER OF HDPE PIPE SHALL BE GREATER THAN OR EQUAL TO THE INTERIOR DIAMETER OF THE PROPOSED (DUCTILE IRON) WATER PIPE CONNECTING INTO THE HDD PIPE SECTION. CONNECTION OF THE HDD PIPE (HDPE) SECTION TO THE STANDARD PIPE (DUCTILE IRON) SECTION INSTALLED BY OPEN-TRENCH SHALL BE SPECIFICALLY APPROVED BY JOHNSTON COUNTY.
4. WATER SERVICE PIPE SHALL BE ¾" DIAMETER, TYPE-K COPPER WATER TUBING CONFORMING TO ASTM B-88.
5. DUCTILE IRON PIPES SHALL HAVE INTERIOR SURFACES CEMENT LINED (IN ACCORDANCE WITH ANSI 21.4) WITH A MINIMUM THICKNESS OF 1/16".
6. ENCASEMENT PIPES SHALL BE STEEL AND MEET ASTM SPECIFICATION A252-61, GRADE-2 WITH A BITUMINOUS COATING FURNISHED ON THE OUTSIDE.
7. ENCASEMENT ENDS SHALL BE SEALED WITH BRICK AND MORTAR. GROUTING THE ANNULAR SPACE IS NOT ALLOWED. INSTALL STAINLESS STEEL "BRIDLE RODS" CONNECTING WATER CARRIER PIPE TO ENCASEMENT PIPE. TWO ¾" BRIDLE RODS ARE REQUIRED FOR 6", 8" DIAMETER PIPES AND FOUR ¾" BRIDLE RODS ARE REQUIRED FOR 12" DIAMETER PIPES AS PER JOHNSTON COUNTY STANDARD DETAIL "STANDARD BORE ENCASMENT" AS SHOWN ON SHEET UC-20.
8. WATER CARRIER PIPES INSTALLED INSIDE ENCASEMENT PIPE (AND FOR THE FIRST JOINT IN EACH DIRECTION OUTSIDE ENCASEMENT PIPE) SHALL CONSIST OF DUCTILE IRON FLEXIBLE-RESTRAINED JOINT PIPE (WITH SELF-RESTRAINING GASKETS). DO NOT USE RETAINER GLANDS (I.E. "MEGALUG") INSIDE THE ENCASEMENT PIPE. THE WATER CARRIER PIPE SHALL BE SUPPORTED BY STAINLESS STEEL SPIDERS (SPACERS) INSIDE ENCASEMENT PIPE AS PER JOHNSTON COUNTY SPECIFICATIONS (SEC 2.5.2) AND STANDARD DETAIL "STANDARD BORE ENCASEMENT" AS SHOWN ON UC-20.
9. IT IS THE CONTRACTOR'S RESPONSIBILITY TO HAVE ALL TRENCHLESS WATER LINE INSTALLATIONS DESIGNED AND SEALED BY A NORTH CAROLINA REGISTERED PROFESSIONAL ENGINEER. CONTRACTOR TO HAVE ENGINEER DESIGN AND SEAL ALL COMPONENTS OF HDD INSTALLATION INCLUDING BUT NOT LIMITED TO BORE PATH (HORIZONTAL, VERTICAL) ALIGNMENTS AND ENVIRONMENTAL MONITORING/PROTECTION PLANS.
10. ALL CONNECTIONS TO COUNTY LINES SHALL BE WITNESSED BY A REPRESENTATIVE OF THE COUNTY. IN NO CASE SHALL THE CONTRACTOR SHUT OFF THE WATER OR OPERATE THE FIRE HYDRANTS OR GATE VALVES IN THE EXISTING SYSTEMS WITHOUT THE EXPRESSED PERMISSION OF THE OWNER. A MINIMUM OF 72 HOURS NOTICE MUST BE GIVEN FOR WHEN THE WATER MAIN MUST BE REMOVED FROM SERVICE AND CUT. SEE JOHNSTON COUNTY SPECIFICATION 3.1.16.1.
11. PERFORM ALL PRESSURE TESTS, LEAKAGE TESTS, AND STERILIZATION ON NEWLY INSTALLED WATER MAINS AS PER NCDOT SPECIFICATIONS 1510-3(B).
12. ALL HORIZONTAL AND VERTICAL PIPE JOINT DEFLECTION AREAS CALLED FOR ON PLANS ARE MAXIMUM FOUR DEGREE DEFLECTIONS WHICH IS BASED ON 80% OF MANUFACTURERS SPECIFICATIONS OF ALLOWABLE DEFLECTION OF FIVE DEGREES. INSTALLATION SHALL NOT EXCEED MANUFACTURER SPECIFICATIONS FOR DEFLECTION, IF MORE RESTRICTIVE.
13. ALL LOCATIONS (ON PROFILE SHEETS) SPECIFYING RESTRAINED JOINTS SHALL UTILIZE FLEXIBLE (NOT RIGID) RESTRAINED PIPE AND FITTING JOINTS. THE ONLY LOCATION SPECIFYING RIGID RESTRAINED JOINTS IS FOR WATER LINE "W5" WHERE IT WILL BE INSTALLED IN THE STREAM BOTTOM AS SHOWN ON PROFILE SHEET UC-14 (W5-STA 11+25 TO W5-STA 13+50).
14. ALL EXISTING FIRE HYDRANTS AND WATER VALVES REMOVED AS PART OF THIS PROJECT SHALL BECOME PROPERTY OF JOHNSTON COUNTY...CONTRACTOR SHALL COORDINATE WITH JOHNSTON COUNTY FOR TEMPORARY ON-SITE STORAGE LOCATION AND PICK-UP/TRANSPORT BY JOHNSTON COUNTY.

EXISTING WATER LINE ANCHOR BLOCK

(TWELVE PLAN LOCATIONS)

PLAN VIEW

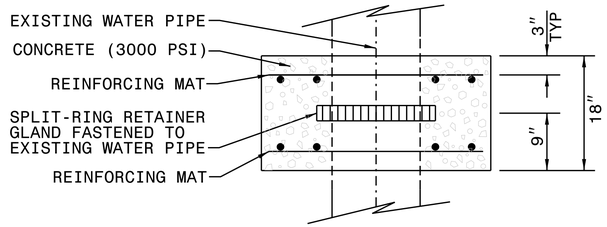

CROSS-SECTION VIEW

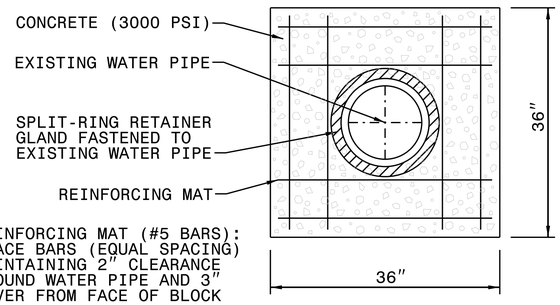

REINFORCING MAT (#5 BARS): PLACE BARS (EQUAL SPACING) MAINTAINING 2" CLEARANCE AROUND WATER PIPE AND 3" COVER FROM FACE OF BLOCK

CONCRETE ANCHOR BLOCK FOR EXISTING WATER LINE NOTES:

1. CONCRETE ANCHOR BLOCK TO BE PLACED ON PORTION OF EXISTING WATER PIPE ADJACENT TO "TIE-IN" LOCATION (WHERE PROPOSED WATER PIPE CONNECTS TO EXISTING PIPE) ON SIDE OF CONNECTION THAT WILL REMAIN IN SERVICE...IF ANCHOR BLOCK CAN NOT BE INSTALLED ON SAME SECTION OF EXISTING PIPE THAT IS CUT FOR CONNECTION OF PROPOSED WATER PIPE, THEN PIPE JOINT (ON EXISTING WATER LINE) BETWEEN ANCHOR BLOCK AND "TIE-IN" FITTING SHALL BE RESTRAINED WITH SPLIT-RING RETAINER GLAND.
2. CONCRETE SHALL BE SUFFICIENTLY CURED BEFORE EXISTING PIPE IS CUT.
3. AFTER SPLIT-RING RETAINER GLANDS ARE INSTALLED ON PIPE, THEY SHALL BE SUFFICIENTLY WRAPPED IN POLYETHYLENE TO PREVENT CONCRETE FROM CONTACTING ANY COMPONENTS OF RETAINER GLAND TO PREVENT CONCRETE INTRUSION INTO THE WEDGE POCKET.
4. CONTRACTOR TO ENSURE PROPER RETAINING GLANDS ARE USED FOR EACH TYPE OF PIPE (DUCTILE IRON OR PVC).

STANDARD UTILITY TRENCH

TRENCH DETAIL

MAXIMUM UTILITY TRENCH WIDTH AT TOP OF PIPE (NOMINAL PIPE SIZES)

28" (4" PIPE)
30" (6" PIPE)
32" (8" PIPE)
36" (12" PIPE)

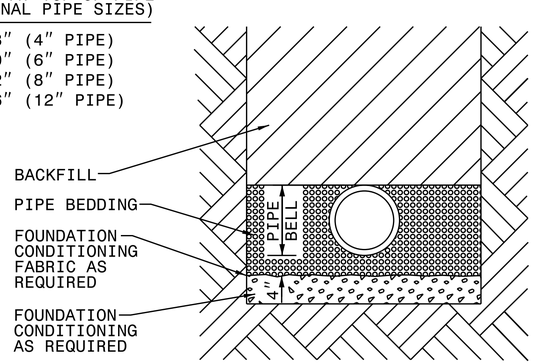

PLACE FOUNDATION CONDITIONING MATERIAL BELOW BEDDING IF REQUIRED, AS DIRECTED BY ENGINEER. PIPE BEDDED IN SELECT MATERIAL, CLASS-II (TYPE 1) OR CLASS III. TRENCH BACKFILLED IN LOOSE 6" LAYERS COMPACTED TO TOP OF TRENCH USING LOCAL EXCAVATED MATERIAL APPROVED BY THE ENGINEER, OR SELECT MATERIAL. ALL MATERIAL SHALL BE FREE OF ROCKS, FOREIGN MATERIAL, AND FROZEN EARTH. COMPACTION SHALL BE TO APPROXIMATELY 95% DENSITY IN ACCORDANCE WITH AASHTO T-99 AS MODIFIED BY THE DEPARTMENT OF TRANSPORTATION.

04-NOV-2014 09:19
$$$$USERNAME$$$$