STANDARD DETAILS FOR JOHNSTON COUNTY WATER SYSTEM

STANDARD BORE ENCASEMENT
STANDARD WATER TAP

PROJECT REFERENCE NO.	SHEET NO.
W-5107	UC-20
DESIGNED BY: EWH	
DRAWN BY: EWH	
CHECKED BY: RBW	
APPROVED BY: RBW	
REVISED:	
NORTH CAROLINA DEPARTMENT OF TRANSPORTATION	
UTILITIES ENGINEERING SEC. PHONE:(919)707-6690 FAX:(919)250-4151	11/5/2014 UTILITY CONSTRUCTION PLANS ONLY

NORTH CAROLINA PROFESSIONAL SEAL 19157 ENGINEER RONALD B. WILKINS

DocuSigned by: Ron Wilkins

UTILITY CONSTRUCTION

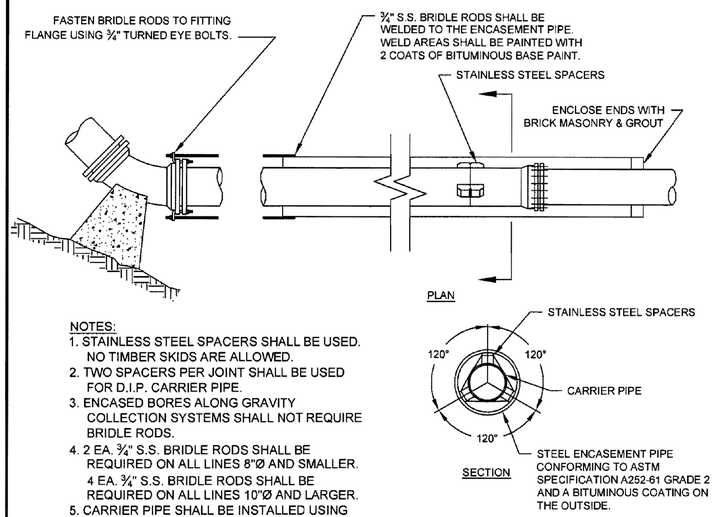

NOTES:
1. STAINLESS STEEL SPACERS SHALL BE USED. NO TIMBER SKIDS ARE ALLOWED.
2. TWO SPACERS PER JOINT SHALL BE USED FOR D.I.P. CARRIER PIPE.
3. ENCASED BORES ALONG GRAVITY COLLECTION SYSTEMS SHALL NOT REQUIRE BRIDLE RODS.
4. 2 EA. ¾" S.S. BRIDLE RODS SHALL BE REQUIRED ON ALL LINES 8"Ø AND SMALLER. 4 EA. ¾" S.S. BRIDLE RODS SHALL BE REQUIRED ON ALL LINES 10"Ø AND LARGER.
5. CARRIER PIPE SHALL BE INSTALLED USING 'FIELD LOK' GASKETS OR APPROVED EQUAL.

STANDARD BORE ENCASEMENT

NOT TO SCALE

	Name	Date
Drawn By:		
Checked By:		
Approved By:		
Scale:		

Rev.	Description	Date	Init.

JOHNSTON COUNTY
Department of Public Utilities
P.O. Box 2263
Smithfield, NC 27577

WATER
STANDARD DETAIL
Standard Bore Encasement

PAGE 6

NOTE:
ALL TAPS 2" AND SMALLER SHALL BE MADE WITH TAPPING SADDLE. ALL TAPS LARGER THAN 2" SHALL BE MADE WITH TAPPING SLEEVE AND VALVE. NO DIRECT TAPS SHALL BE MADE.

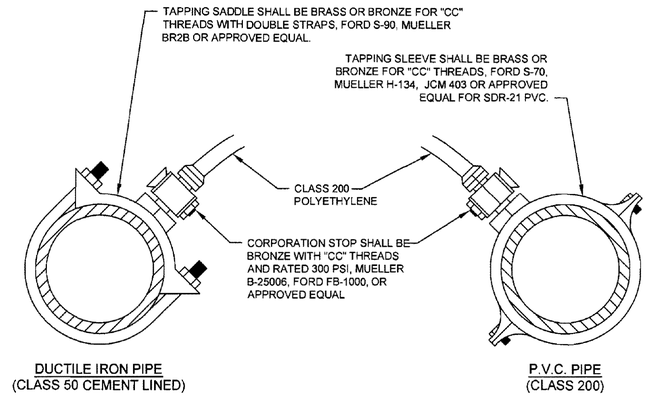

NOTE: ALL TAPS TO BE MADE ON TOP QUARTER OF MAIN.

STANDARD WATER TAP DETAIL

NOT TO SCALE

	Name	Date
Drawn By:		
Checked By:		
Approved By:		
Scale:		

Rev.	Description	Date	Init.

JOHNSTON COUNTY
Department of Public Utilities
P.O. Box 2263
Smithfield, NC 27577

WATER
STANDARD DETAIL
Standard Water Tap

PAGE 20

5/14/99
04-NOV-2014 09:22
ties\Engineering\UC\Proj\280.020_W5107_details_UC20.dgn
$$$$USER NAME$$$$