STANDARD DETAILS FOR JOHNSTON COUNTY WATER SYSTEM

CONCRETE PROTECTOR RING FIRE HYDRANT ASSEMBLY

PROJECT REFERENCE NO.	SHEET NO.
W-5107	UC-19
DESIGNED BY: EWH	
DRAWN BY: EWH	
CHECKED BY: RBW	
APPROVED BY: RBW	
REVISED:	
NORTH CAROLINA DEPARTMENT OF TRANSPORTATION	
UTILITIES ENGINEERING SEC. PHONE:(919)707-6690 FAX:(919)250-4151	UTILITY CONSTRUCTION PLANS ONLY

NORTH CAROLINA PROFESSIONAL SEAL 10157 ENGINEER RONALD B. WILKINS
DocuSigned by: Ron Wilkins
11/5/2014

UTILITY CONSTRUCTION

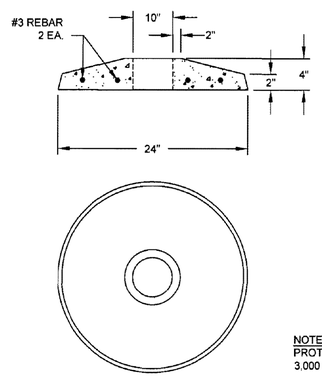

NOTE:
PROTECTOR RING SHALL BE 3,000 P.S.I. CONCRETE.

CONCRETE PROTECTOR RING

NOT TO SCALE

	Name	Date
Drawn By:		
Checked By:		
Approved By:		
Scale:		

Rev.	Description	Date	Init.

JOHNSTON COUNTY
Department of Public Utilities
P.O. Box 2263
Smithfield, NC 27577

WATER STANDARD DETAIL Concrete Protector Ring

PAGE **14**

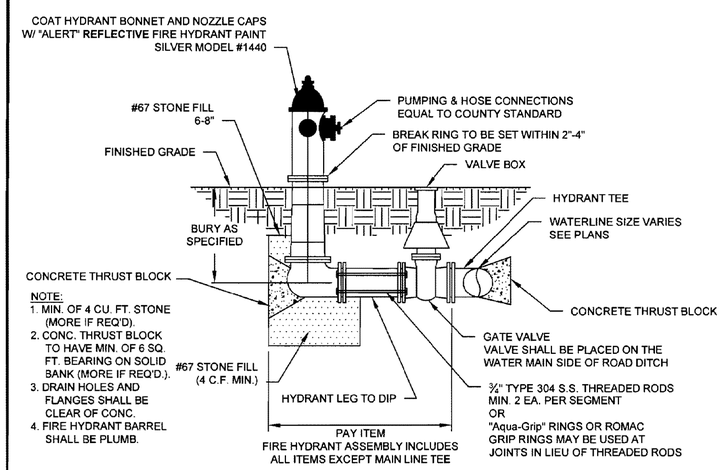

NOTE:
1. MIN. OF 4 CU. FT. STONE (MORE IF REQ'D).
2. CONC. THRUST BLOCK TO HAVE MIN. OF 6 SQ. FT. BEARING ON SOLID BANK (MORE IF REQ'D.).
3. DRAIN HOLES AND FLANGES SHALL BE CLEAR OF CONC.
4. FIRE HYDRANT BARREL SHALL BE PLUMB.

FIRE HYDRANT ASSEMBLY

NOT TO SCALE

****FIRE HYDRANTS INSTALLED ON EXISTING 6" WATER MAINS, MUST BE INSTALLED USING A 6"x6" TEE CUT INTO THE EXISTING WATER MAIN. FIRE HYDRANTS INSTALLED ON EXISTING WATER MAINS LARGER THAN 6", CAN BE INSTALLED USING A TAPPING SLEEVE AND VALVE ON THE EXISTING WATER MAIN.**

	Name	Date
Drawn By:		
Checked By:		
Approved By:		
Scale:		

Rev.	Description	Date	Init.

JOHNSTON COUNTY
Department of Public Utilities
P.O. Box 2263
Smithfield, NC 27577

WATER STANDARD DETAIL Fire Hydrant Assembly

PAGE **4**

5/14/99

04-NOV-2014 09:21
Engineering\UC\Proj\280.019_W5107_details_UC19.dgn