EROSION CONTROL PLAN

PROJECT REFERENCE NO.	SHEET NO.
W-5107	EC-24/CONST.10
R/W SHEET NO.	
ROADWAY DESIGN ENGINEER	HYDRAULICS ENGINEER

TEMPORARY DIVERSION CHANNEL DIMENSIONS

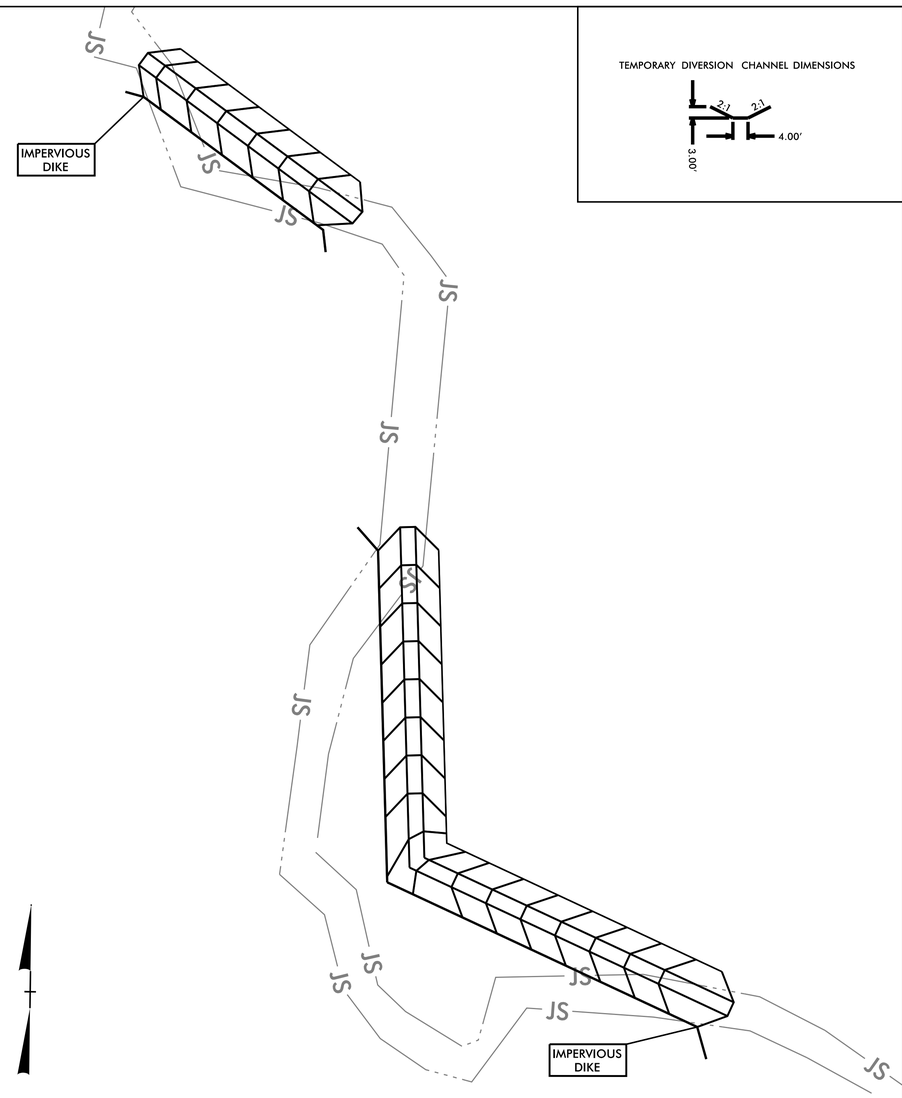

CONSTRUCTION SEQUENCE

(2) 9'X9' RCBC -SR2- & -Y6LPB-

STAGE I

1. UTILIZE SPECIAL STILLING BASIN(S) AS NECESSARY.
2. EXCAVATE TEMPORARY DIVERSION CHANNEL AROUND CONSTRUCTION SITE, FROM THE DOWNSTREAM END.
3. TIE DOWNSTREAM END OF THE TEMPORARY DIVERSION CHANNEL INTO THE EXISTING STREAM. THEN UPSTREAM END.
4. CONSTRUCT INPERVIOUS DIKES UPSTREAM AND DOWNSTREAM TO DIRECT WATER THROUGH TEMPORARY DIVERSION CHANNEL.
5. DEWATER CONSTRUCTION AREA INTO SPECIAL STILLING BASIN.

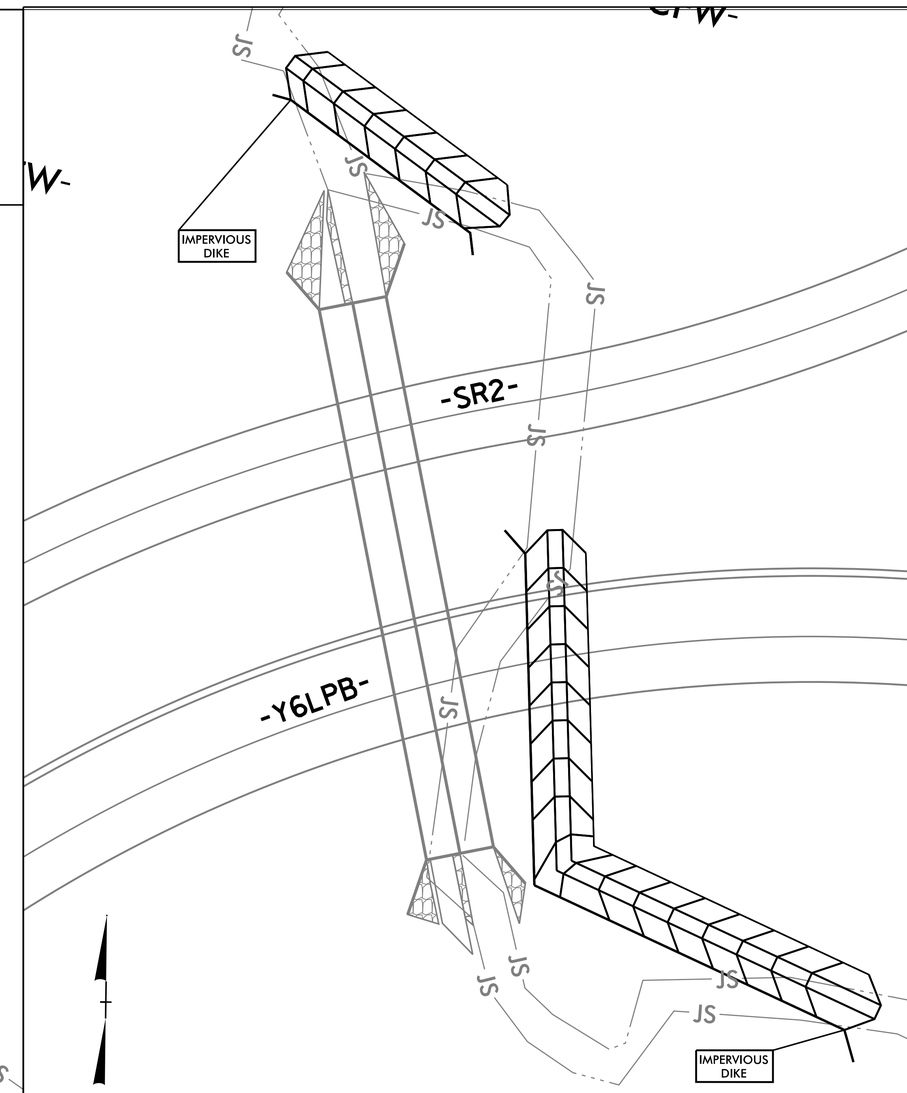

CONSTRUCTION SEQUENCE

(2) 9'X9' RCBC -SR2- & -Y6LPB-

STAGE II

1. CONSTRUCT CHANNEL AND ARMOR CHANNEL EMBANKMENTS.
2. CONSTRUCT (2) 9'X9' RCBC INCLUDING WINGWALLS, BOTTOM SLAB, AND CLASS I RIPRAP ALONG WINGWALLS.
3. REMOVE ALL SEDIMENT FROM STREAM THAT RESULTED FROM CONSTRUCTION ACTIVITIES PRIOR TO REMOVAL OF IMPERVIOUS DIKES.
4. REMOVE DOWNSTREAM AND UPSTREAM IMPERVIOUS DIKES AND STILLING BASIN.
5. FILL TEMPORARY DIVERSION CHANNEL.

GRAPHIC SCALE

10 0 20

PLANS