CULVERT CONSTRUCTION SEQUENCE STA. 14 + 00 –L–

PROJECT REFERENCE NO.	SHEET NO.
B-5127	EC-4/CONST.4
R/W SHEET NO.	
ROADWAY DESIGN ENGINEER	HYDRAULICS ENGINEER

PHASE I

1. UTILIZE SPECIAL STILLING BASIN(S) AS NEEDED THROUGHOUT CULVERT CONSTRUCTION.
2. REMOVE EXISTING BRIDGE.
3. CONSTRUCT IMPERVIOUS DIKE A, DIVERTING FLOW.
4. CONSTRUCT BARRELS 1 AND 2 OF PROPOSED CULVERT, AND ANY NECESSARY INLET/OUTLET CHANNEL IMPROVEMENTS.
5. REMOVE IMPERVIOUS DIKE A.

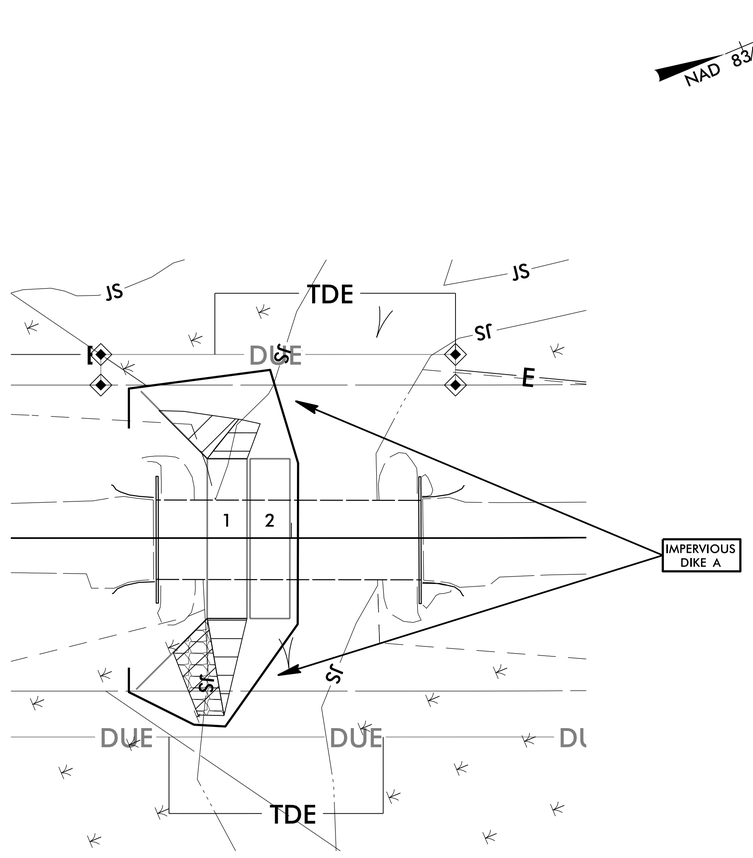

PHASE II
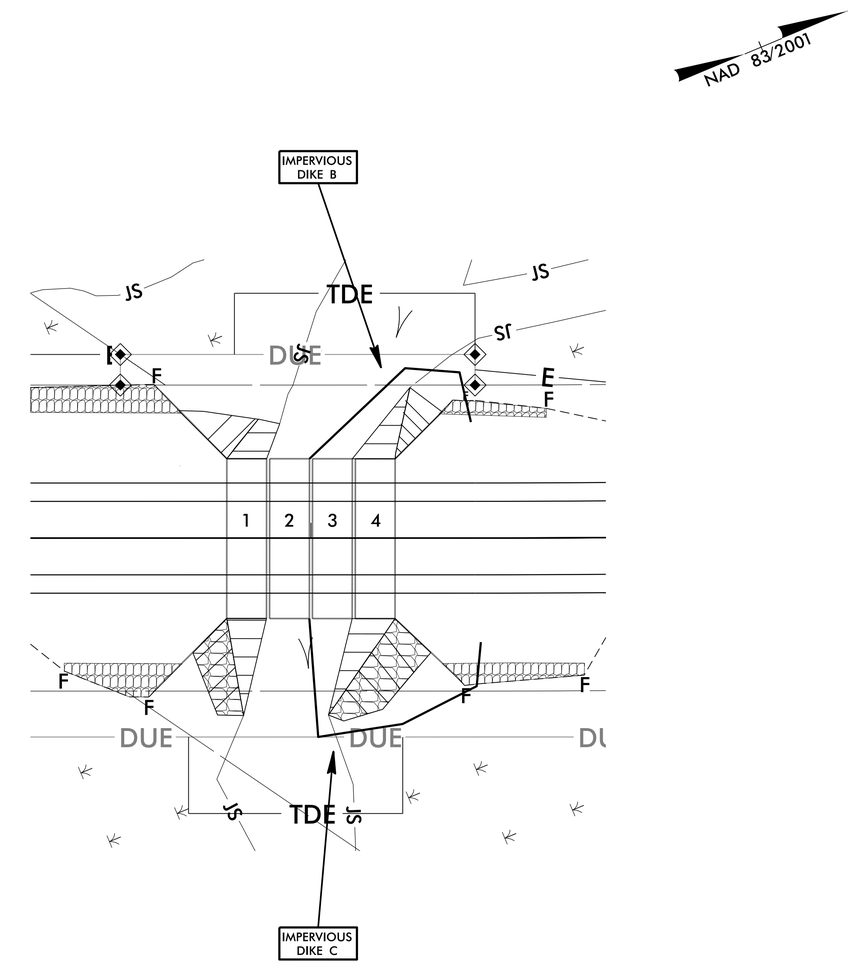
6. CONSTRUCT IMPERVIOUS DIKES B AND C, DIVERTING FLOW THROUGH COMPLETED BARRELS 1 AND 2 OF PROPOSED CULVERT.
7. CONSTRUCT BARRELS 3 AND 4 OF PROPOSED CULVERT, AND ANY NECESSARY INLET/OUTLET CHANNEL IMPROVEMENTS.
8. REMOVE IMPERVIOUS DIKES B AND C, ALLOWING NORMAL FLOW THROUGH THE PROPOSED CULVERT.
9. REMOVE ANY REMAINING SPECIAL STILLING BASIN(S).
10. COMPLETE ROADWAY.