PROJECT REFERENCE NO.	SHEET NO.
B-5127	2A-1
R/W SHEET NO.	

ROADWAY DESIGN ENGINEER
NORTH CAROLINA PROFESSIONAL SEAL 033871 ENGINEER DANIEL W. GARDNER, JR.
12/1/2021
DocuSigned by: Daniel W. Gardner, Jr.
7E3006E63CB4BD...

PAVEMENT DESIGN ENGINEER
NORTH CAROLINA PROFESSIONAL SEAL 039819 ENGINEER LATONYA T. HEYWARD
12/1/2021
DocuSigned by: LaTonya Heyward
02F8F7D5BE8A4C...

PAVEMENT SCHEDULE

C	PROP. APPROX. 1½" ASPHALT CONCRETE SURFACE COURSE, TYPE S9.5B, AT AN AVERAGE RATE OF 168 LBS. PER SQ. YD.
D	PROP. APPROX. 3½" ASPHALT CONCRETE INTERMEDIATE COURSE, TYPE I19.0B, AT AN AVERAGE RATE OF 399 LBS. PER SQ. YD.
E1	PROP. APPROX. 4" ASPHALT CONCRETE BASE COURSE, TYPE B25.0B, AT AN AVERAGE RATE OF 456 LBS. PER SQ. YD.
E2	PROP. VAR. DEPTH ASPHALT CONCRETE BASE COURSE, TYPE B25.0B, AT AN AVERAGE RATE OF 114 LBS PER SQ. YD. PER 1" DEPTH, TO BE PLACED IN LAYERS NOT GREATER THAN 5.5" IN DEPTH OR LESS THAN 3" IN DEPTH.
R	SHOULDER BERM GUTTER
T	EARTH MATERIAL.
U	EXISTING PAVEMENT

ALL PAVEMENT SLOPES ARE 1:1 UNLESS OTHERWISE NOTED

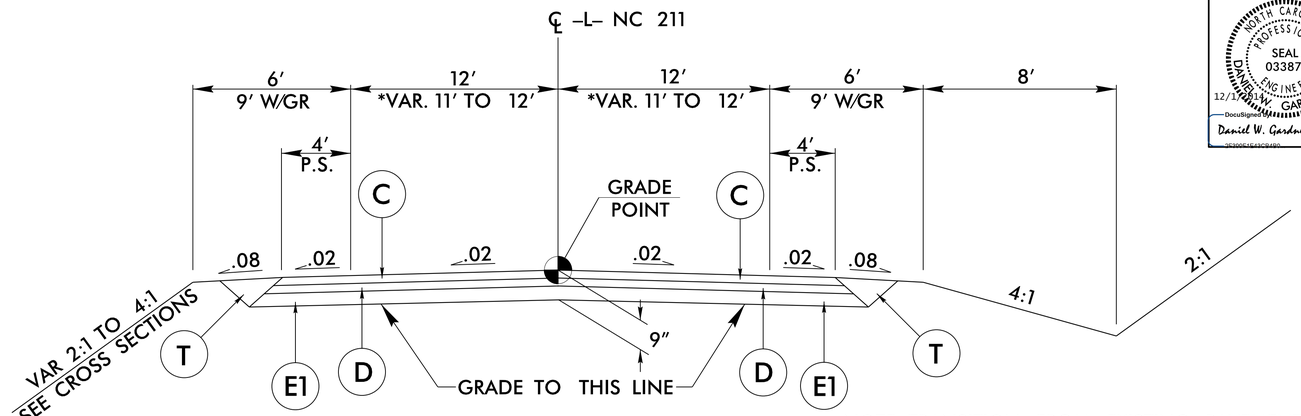

TYPICAL SECTION NO. 1

NOTE: TRANSITION FROM EXISTING PAVEMENT WIDTH TO TYPICAL SECTION NO. 1 –L– STA. 12+00.00 TO STA. 12+25.00

USE TYPICAL SECTION NO. 1
*–L– STA. 12+25.00 TO STA. 12+75.00
–L– STA. 12+75.00 TO STA. 16+00.00

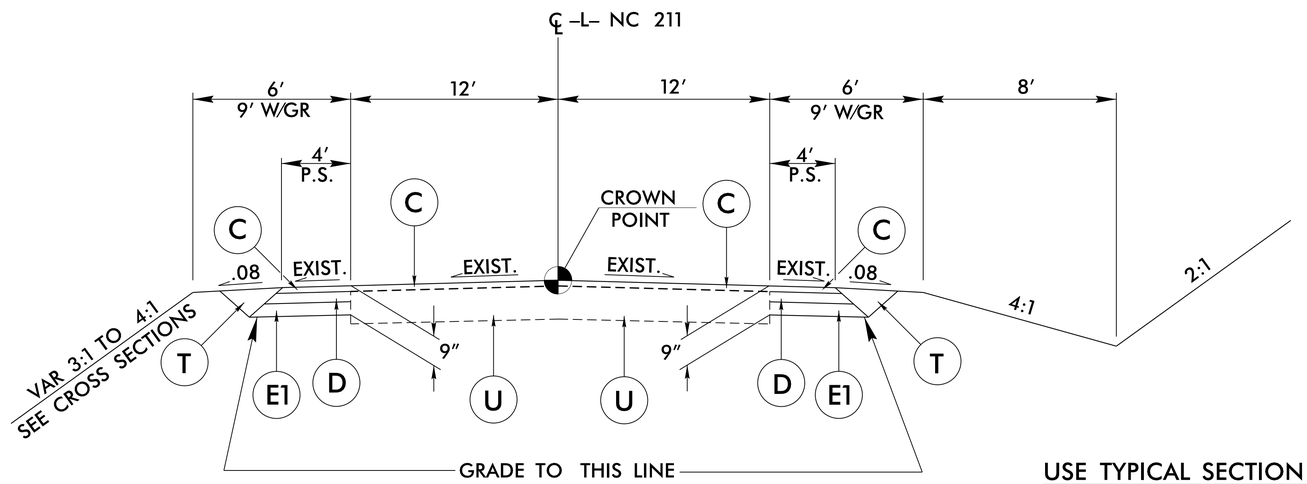

TYPICAL SECTION NO. 2

USE TYPICAL SECTION NO. 2
–L– STA. 16+00.00 TO STA. 16+30.00

NOTE: TRANSITION FROM TYPICAL NO. 2 TO EXISTING PAVEMENT WIDTH –L– STA. 16+30.00 TO STA. 16+80.00

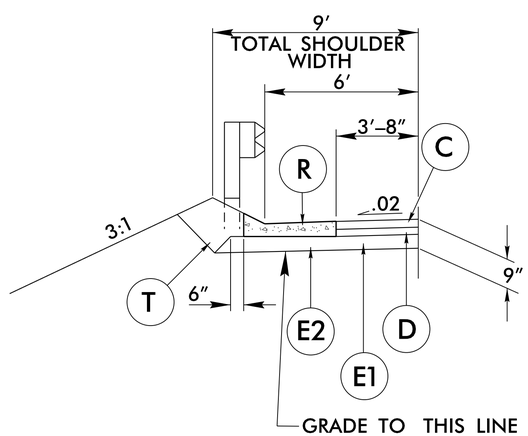

DETAIL OF SHOULDER BERM GUTTER
–L– STA. 15+73 TO STA. 16+00 LT.

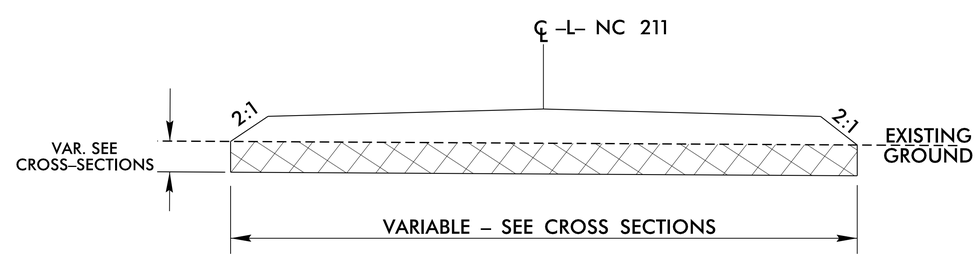

TYPICAL UNDERCUT EXCAVATION

–L– STA. 13+68.00 TO STA. 13+72.25
–L– STA. 14+27.75 TO STA. 14+30.00

5/14/99

24-NOV-2014 06:51
R:\Roadway\Proj\b5127_rdy_typ.dgn
$$$$USERNAME$$$$