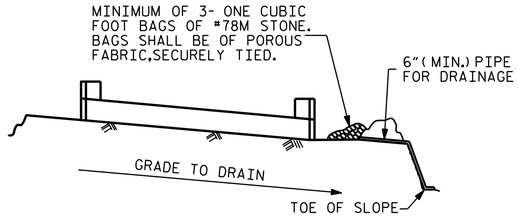

BAGGED STONE AND PIPE SHALL BE PLACED IMMEDIATELY AFTER COMPLETION OF END BENT EXCAVATION. PIPE MAY BE EITHER CONCRETE, CORRUGATED STEEL, CORRUGATED ALUMINUM ALLOY, OR CORRUGATED PLASTIC. PERFORATED PIPE WILL NOT BE ALLOWED.

BAGGED STONE SHALL REMAIN IN PLACE UNTIL THE ENGINEER DIRECTS THAT IT BE REMOVED. THE CONTRACTOR SHALL REMOVE AND DISPOSE OF SILT ACCUMULATIONS AT BAGGED STONE WHEN SO DIRECTED BY THE ENGINEER. BAGS SHALL BE REMOVED AND REPLACED WHENEVER THE ENGINEER DETERMINES THAT THEY HAVE DETERIORATED AND LOST THEIR EFFECTIVENESS.

NO SEPARATE PAYMENT WILL BE MADE FOR THIS WORK AND THE ENTIRE COST OF THIS WORK SHALL BE INCLUDED IN THE UNIT CONTRACT PRICE BID FOR THE SEVERAL PAY ITEMS.

TEMPORARY DRAINAGE AT END BENT

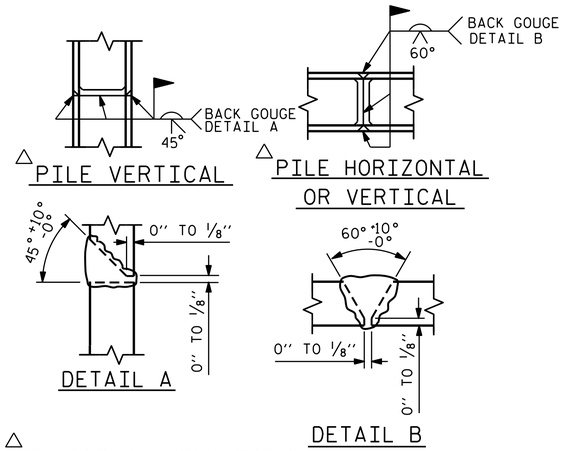

△ POSITION OF PILE DURING WELDING.

PILE SPLICE DETAILS

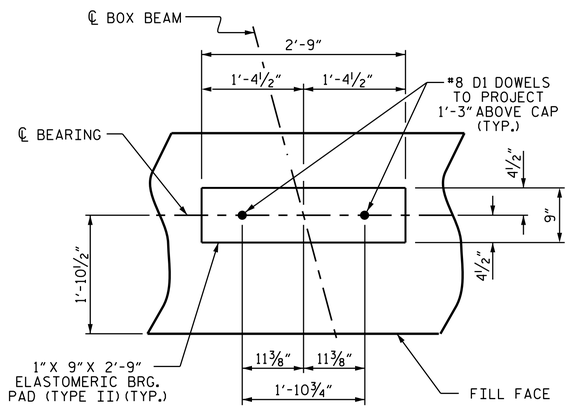

DETAIL "A"

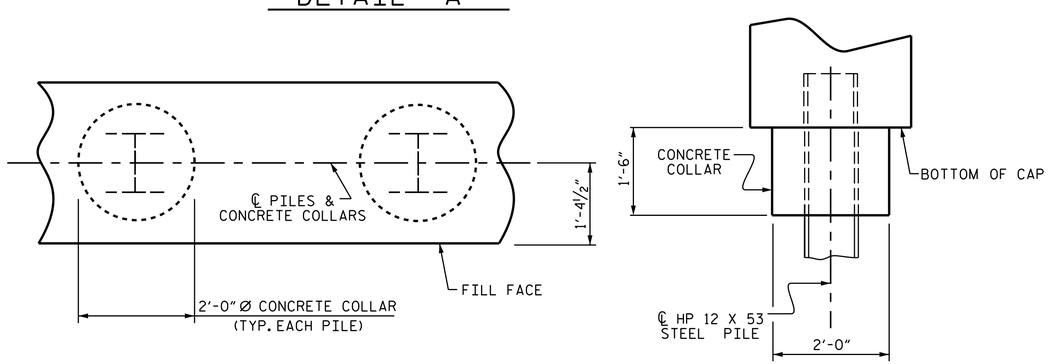

PLAN

ELEVATION

CORROSION PROTECTION FOR STEEL PILES DETAIL

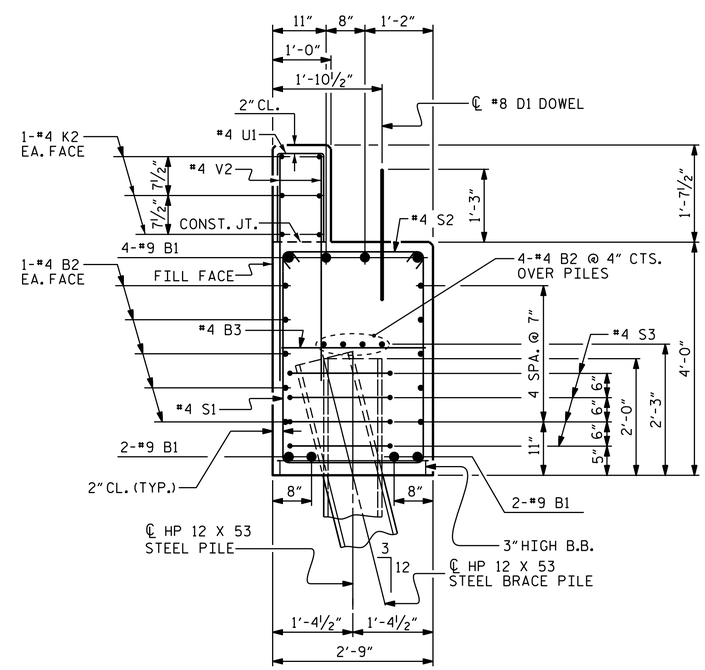

SECTION A-A

(CONCRETE COLLAR NOT SHOWN FOR CLARITY. SEE "CORROSION PROTECTION FOR STEEL PILES DETAIL.")

BAR TYPES

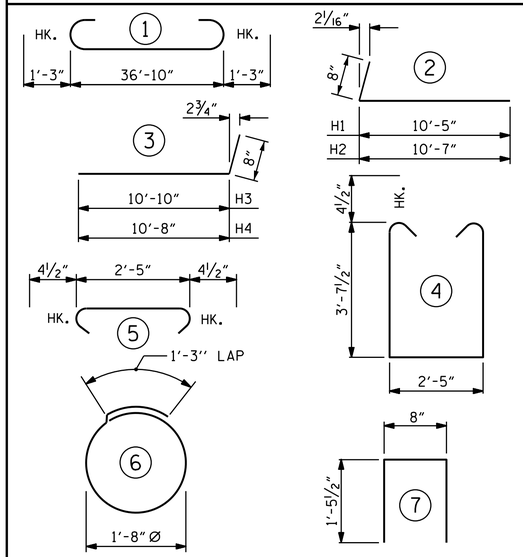

ALL BAR DIMENSIONS ARE OUT TO OUT.

END BENT 1
HP 12 X 53 STEEL PILES
NO: 5 LIN. FT.= 75
STEEL PILE POINTS = 5 EA.

BILL OF MATERIAL
END BENT 1

BAR	NO.	SIZE	TYPE	LENGTH	WEIGHT
B1	8	#9	1	39'-4"	1070
B2	28	#4	STR	19'-10"	371
B3	10	#4	STR	2'-5"	16
D1	20	#8	STR	2'-3"	120
H1	12	#5	2	11'-1"	139
H2	12	#5	2	11'-3"	141
H3	12	#5	3	11'-6"	144
H4	12	#5	3	11'-4"	142
K1	12	#4	STR	3'-1"	25
K2	12	#4	STR	19'-9"	158
S1	48	#4	4	10'-5"	334
S2	48	#4	5	3'-2"	102
S3	20	#4	6	6'-6"	87
U1	31	#4	7	3'-7"	74
V1	61	#4	STR	7'-2"	292
V2	62	#4	STR	5'-3"	217
REINFORCING STEEL					3432 LBS.

CLASS A CONCRETE BREAKDOWN

POUR #1	CAP, LOWER PART OF WINGS & COLLARS	19.2 C.Y.
POUR #2	BACKWALL & UPPER PART OF WINGS	5.4 C.Y.
TOTAL CLASS A CONCRETE		24.6 C.Y.

NORTH CAROLINA PROFESSIONAL SEAL 29441 ENGINEER KRISTY W. ALFORD

DocuSigned by: Kristy W. Alford
F2458389308F40E...

12/16/2014

PROJECT NO. B-5151
GRANVILLE COUNTY
STATION: 14+17.00 -L-

SHEET 3 OF 3

STATE OF NORTH CAROLINA
DEPARTMENT OF TRANSPORTATION
RALEIGH

SUBSTRUCTURE

END BENT 1
DETAILS

REVISIONS						SHEET NO.
NO.	BY:	DATE:	NO.	BY:	DATE:	S-12
1			3			TOTAL SHEETS
2			4			17

ASSEMBLED BY : D.SHACKELFORD	DATE : 09/2014		
CHECKED BY : K.W. ALFORD	DATE : 09/2014		
DRAWN BY : WJH 12/11	REV. 8/14	MAA/TMG	
CHECKED BY : AAC 12/11			

02-DEC-2014 08:59
Q:\Structures\Plans\Substructure\B-5151_SD_E*.dgn
jpadams

STD. NO. EB_30_105S4_33BB