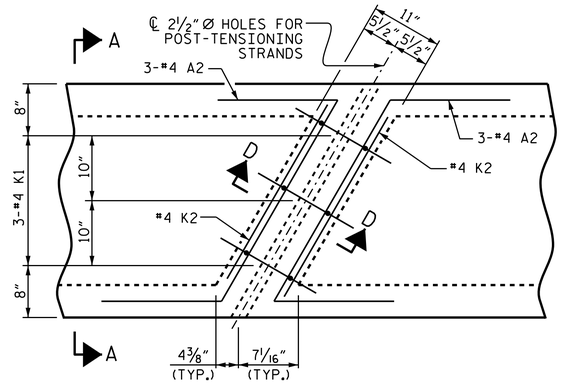

PLAN

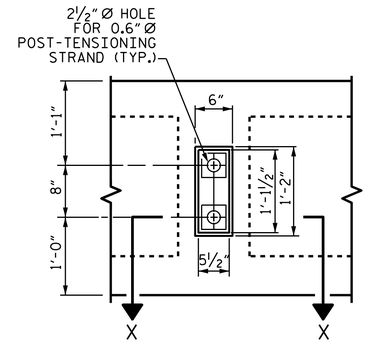

VIEW Y-Y

SHOWING ELEVATION VIEW OF GROUTED RECESS

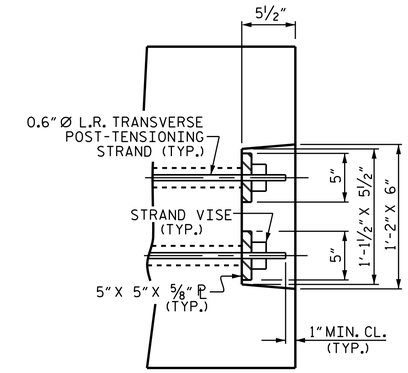

DETAIL "C"

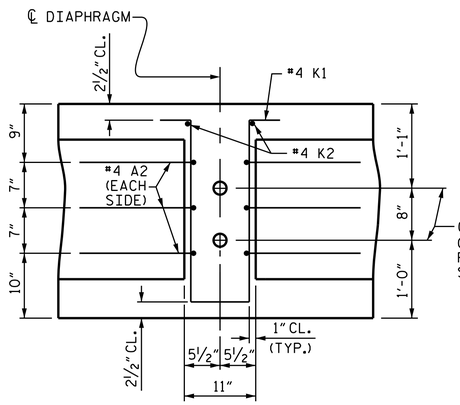

SECTION D-D

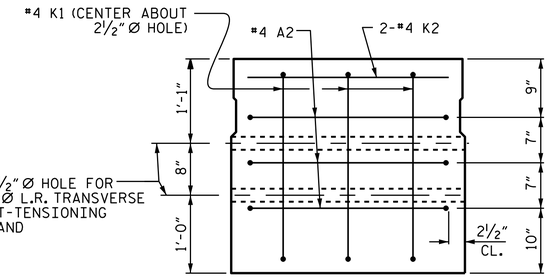

SECTION A-A

VOIDS NOT SHOWN

DOUBLE DIAPHRAGM DETAILS

#4 "S" BARS NOT SHOWN. #4 "S" BARS MAY BE SHIFTED SLIGHTLY TO CLEAR 2½" Ø HOLE.

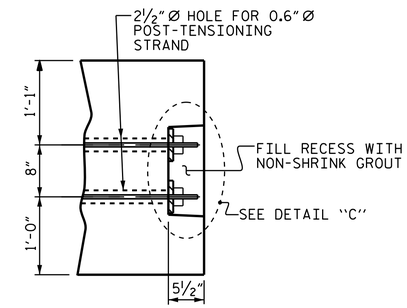

PART SECTION AT RECESS

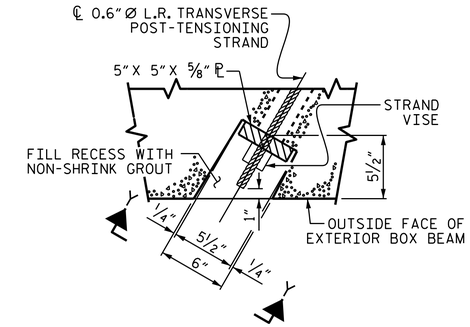

SECTION X-X

SHOWING PLAN VIEW OF GROUTED RECESS

GROUTED RECESS DETAIL AT END OF POST-TENSIONED STRANDS OF EXTERIOR BOX BEAM

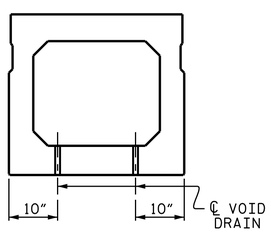

SECTION B-B

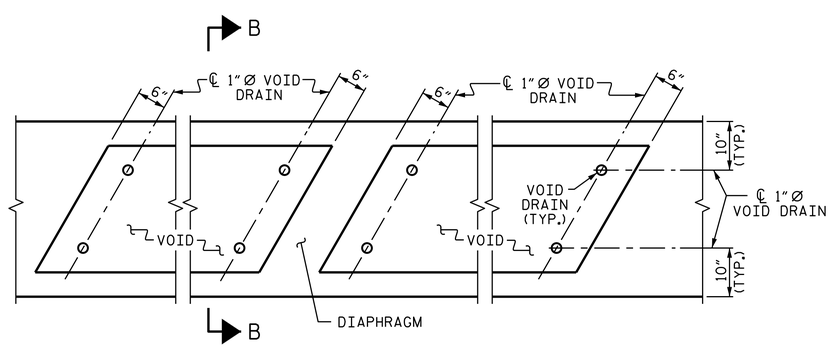

PART PLAN

VOID DRAIN DETAILS

(DIMENSIONS SHOWN ARE TYPICAL FOR EACH VOID)

DEAD LOAD DEFLECTION AND CAMBER		
	3'-0" x 2'-9"	
85' & 90' BOX BEAM UNIT (NC & SE)	0.6"Ø L.R. STRAND	
CAMBER (SLAB ALONE IN PLACE)	2¾"	↑
DEFLECTION DUE TO SUPERIMPOSED DEAD LOAD**	¾"	↓
FINAL CAMBER	2"	↑

** INCLUDES FUTURE WEARING SURFACE

PROJECT NO. B-5151

GRANVILLE COUNTY

STATION: 14+17.00 -L-

SHEET 4 OF 5

NORTH CAROLINA PROFESSIONAL SEAL 29441 ENGINEER KRISTY W. ALFORD

DocuSigned by: F2458389306F40E...

12/16/2014

STATE OF NORTH CAROLINA
DEPARTMENT OF TRANSPORTATION
RALEIGH

STANDARD

3'-0" X 2'-9"
PRESTRESSED CONCRETE
BOX BEAM UNIT

REVISIONS						SHEET NO.
NO.	BY:	DATE:	NO.	BY:	DATE:	S-7
1			3			TOTAL SHEETS
2			4			17

ASSEMBLED BY : D. SHACKELFORD	DATE : 01/2014
CHECKED BY : Fr. LEA	DATE : 03/2014
DRAWN BY : DGE 11/11	
CHECKED BY : TMG 11/11	

02-DEC-2014 08:59
O:\Structures\Plans\Superstructure\B-5151_SD_BX.dgn
jpadams

STD.NO.33PCBB5_105S