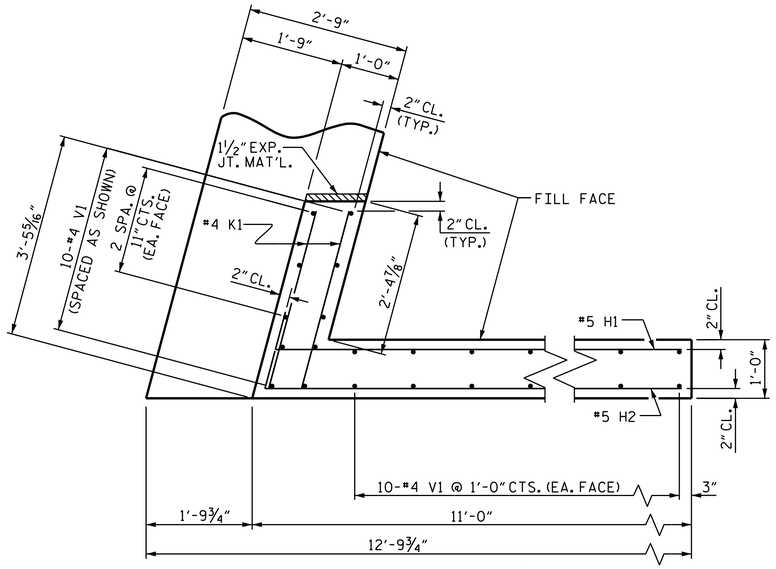

PLAN OF WING (W1)

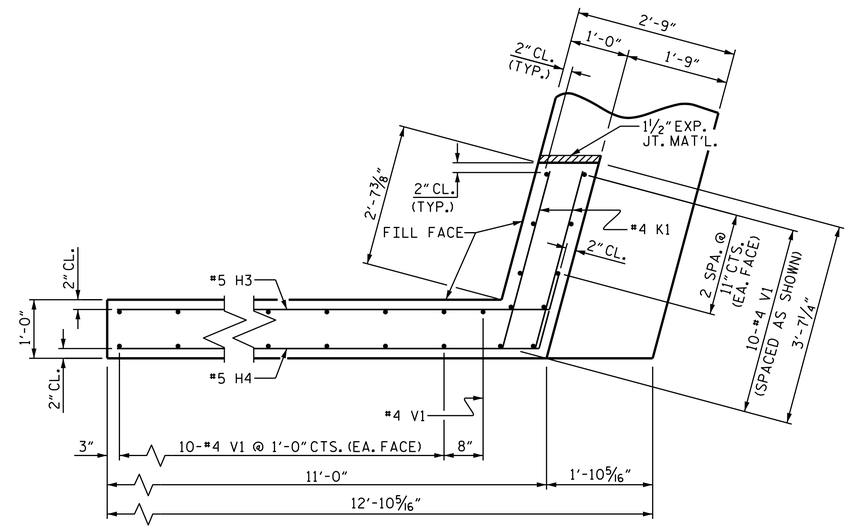

PLAN OF WING (W2)

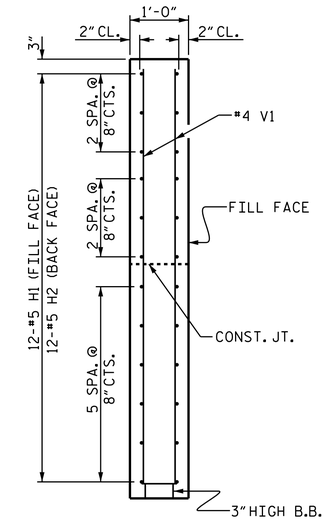

SECTION X-X

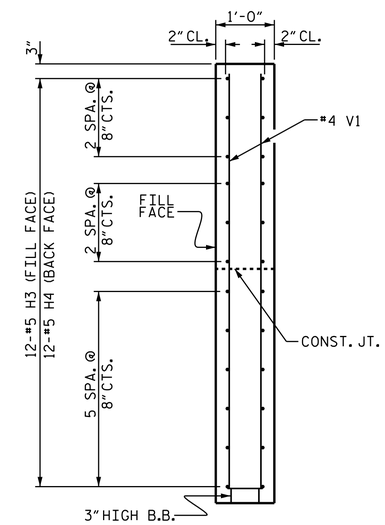

SECTION Y-Y

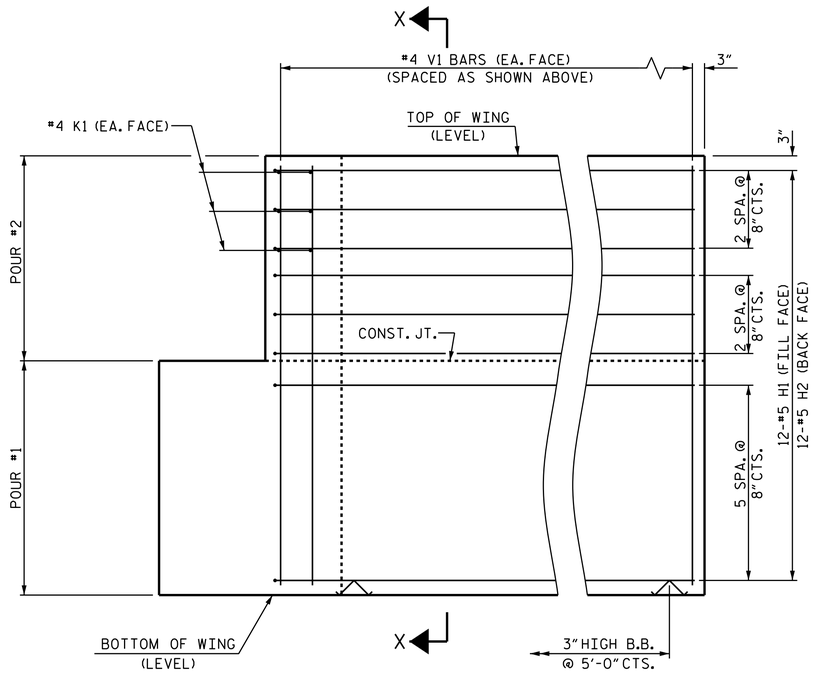

ELEVATION OF WING (W1)

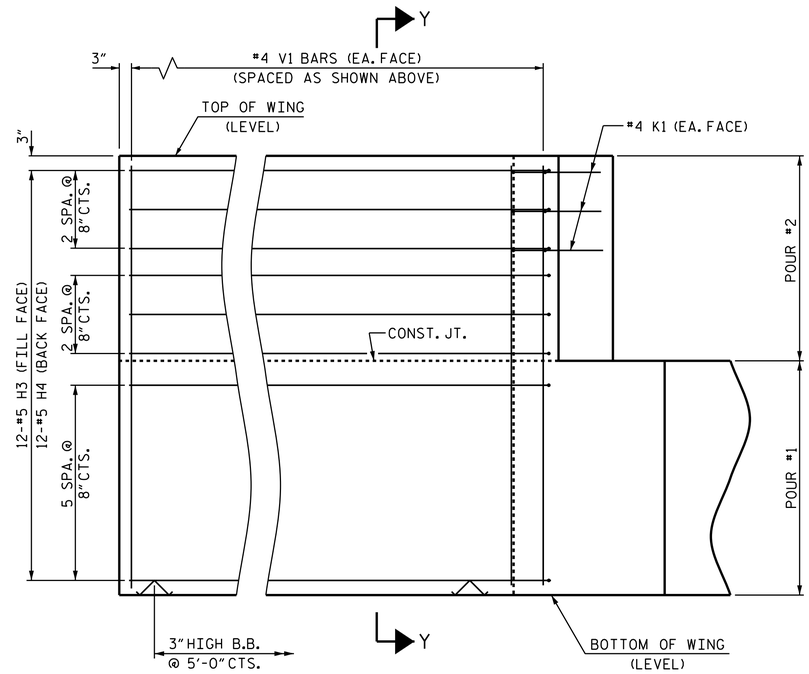

ELEVATION OF WING (W2)

WING DETAILS

PROJECT NO. B-5151

GRANVILLE COUNTY

STATION: 14+17.00 -L-

SHEET 2 OF 3

NORTH CAROLINA PROFESSIONAL SEAL 29441 ENGINEER KRISTY W. ALFORD

DocuSigned by: F2458389308F40E...

12/16/2014

STATE OF NORTH CAROLINA
DEPARTMENT OF TRANSPORTATION
RALEIGH

SUBSTRUCTURE

END BENT 1
WING DETAILS

REVISIONS						SHEET NO.
NO.	BY:	DATE:	NO.	BY:	DATE:	S-11
1			3			TOTAL SHEETS
2			4			17

ASSEMBLED BY : D. SHACKELFORD DATE : 09/2014
CHECKED BY : K.W. ALFORD DATE : 09/2014

DRAWN BY : WJH 12/11
CHECKED BY : AAC 12/11

02-DEC-2014 08:59
Q:\Structures\Plans\Substructure\B-5151_SD_E*.dgn
jpadams

STD. NO. EB_30_105S4_33BB