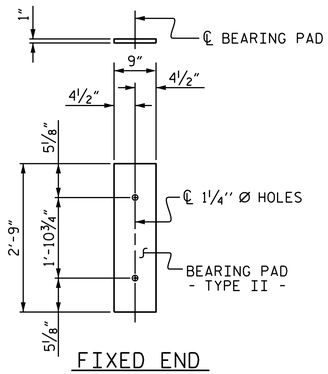

FIXED END

(TYPE II - 20 REQ'D)

ELASTOMERIC BEARING DETAILS

ELASTOMER IN ALL BEARINGS SHALL BE 60 DUROMETER HARDNESS.

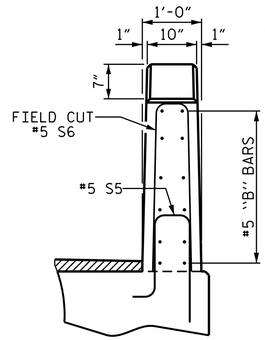

END VIEW

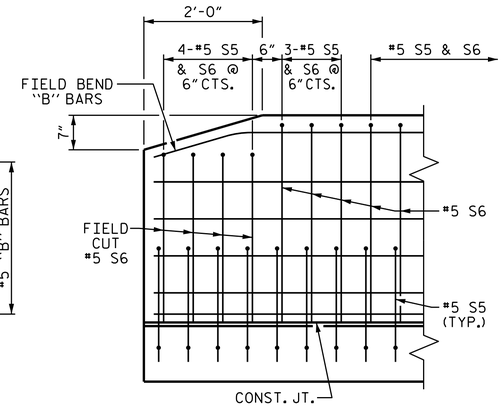

SIDE VIEW

END OF RAIL DETAILS

BOX BEAM UNITS REQUIRED			
	NUMBER	LENGTH	TOTAL LENGTH
EXTERIOR B.B.	2	85'-0"	170'-0"
INTERIOR B.B.	8	85'-0"	680'-0"
TOTAL	10	———	850'-0"

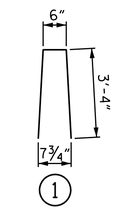

BAR TYPE

BAR DIMENSIONS ARE OUT TO OUT

BILL OF MATERIAL FOR VERTICAL CONCRETE BARRIER RAIL					
BAR	BARS PER PAIR OF EXTERIOR UNITS	SIZE	TYPE	LENGTH	WEIGHT
	85' UNIT				
✱ B9	144	#5	STR	15'-9"	2365
✱ S6	230	#5	1	7'-2"	1719
✱ EPOXY COATED REINFORCING STEEL			LBS.		4084
CLASS AA CONCRETE			CU.YDS.		22.0
TOTAL VERTICAL CONCRETE BARRIER RAIL			LN. FT.		170.0

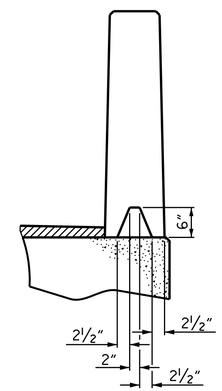

SECTION S-S

AT DAM IN OPEN JOINT
(THIS IS TO BE USED ONLY
WHEN SLIP FORM IS USED)

GUTTERLINE ASPHALT THICKNESS & RAIL HEIGHT		
	ASPHALT OVERLAY THICKNESS @ MID-SPAN	RAIL HEIGHT @ MID-SPAN
85' UNITS	1½"	3'-7½"

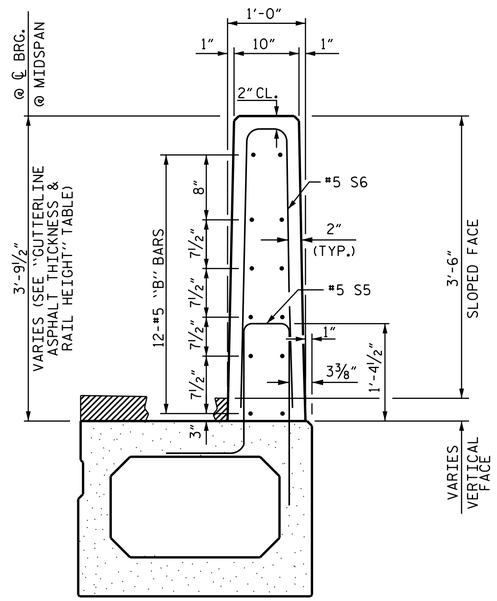

SECTION THRU RAIL

℄ ½" EXP. JT. MAT'L HELD IN
PLACE WITH GALVANIZED NAILS.
(NOTE: OMIT EXP. JT. MAT'L.
WHEN SLIP FORM IS USED)

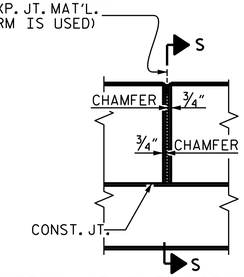

ELEVATION AT EXPANSION JOINTS

VERTICAL CONCRETE BARRIER RAIL DETAILS

PROJECT NO. B-5151

GRANVILLE COUNTY

STATION: 14+17.00 -L-

SHEET 5 OF 5

NORTH CAROLINA PROFESSIONAL SEAL 29441 ENGINEER KRISTY W. ALFORD

DocuSigned by:
F245838930BF40E...

12/16/2014

STATE OF NORTH CAROLINA
DEPARTMENT OF TRANSPORTATION
RALEIGH

3'-0" X 2'-9"
PRESTRESSED CONCRETE
BOX BEAM UNIT

REVISIONS						SHEET NO.
NO.	BY:	DATE:	NO.	BY:	DATE:	S-8
1			3			TOTAL SHEETS
2			4			17

ASSEMBLED BY : D. SHACKELFORD DATE : 01/2014
CHECKED BY : Fr. LEA DATE : 03/2014

DRAWN BY : DGE 10/11
CHECKED BY : TMG 11/11

02-DEC-2014 08:59
0:\Structures\Plans\Superstructure\B-5151_SD_BX.dgn
jpadams

STD. NO. 33PCBB8_75&105S