NOTES :

FOR BERM WIDTH DIMENSIONS, SEE GENERAL DRAWING.

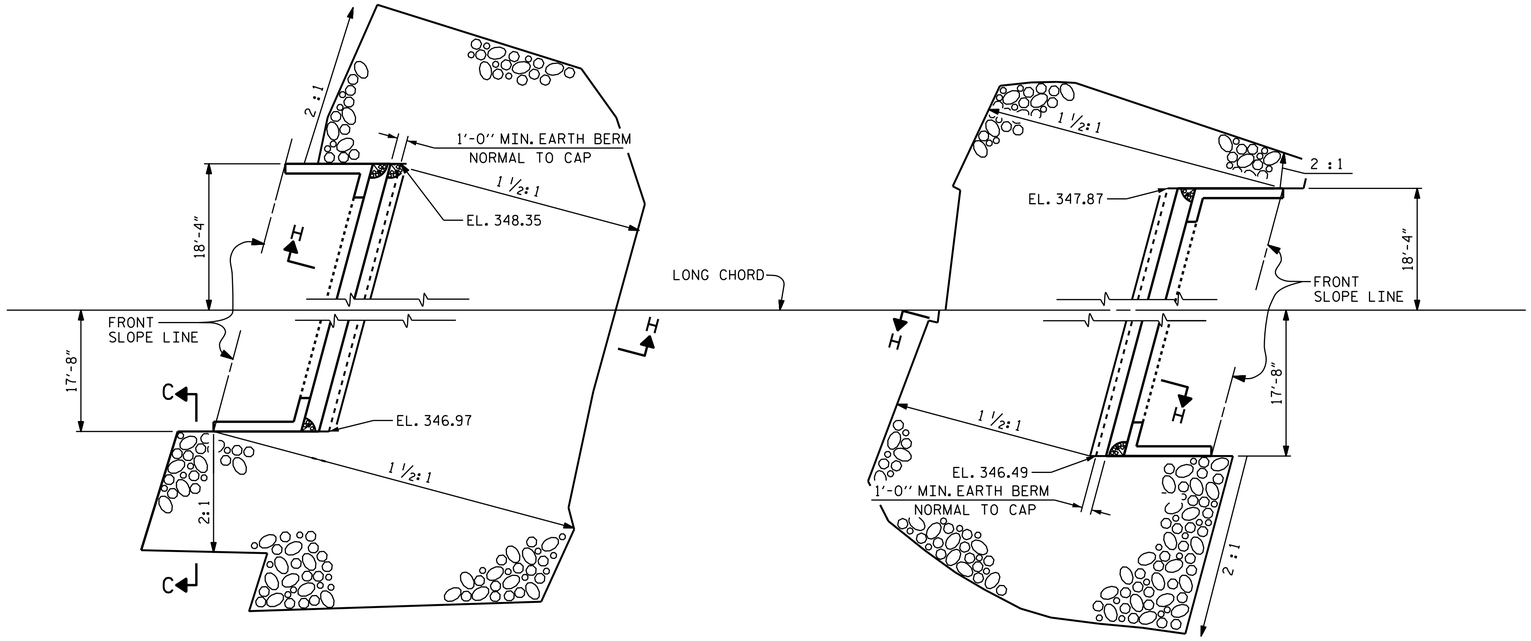

END BENT 1

END BENT 2

PLAN OF RIP RAP

ESTIMATED QUANTITIES		
BRIDGE @ STA. 14+17.00 -L-	RIP RAP CLASS II (2'-0" THICK)	GEOTEXTILE FOR DRAINAGE
	TONS	SQUARE YARDS
END BENT 1	195	215
END BENT 2	145	160

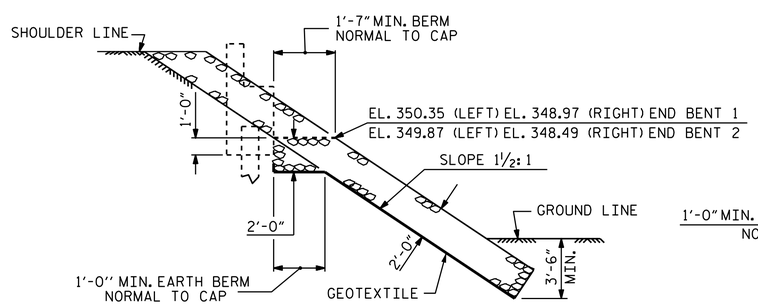

SECTION H-H

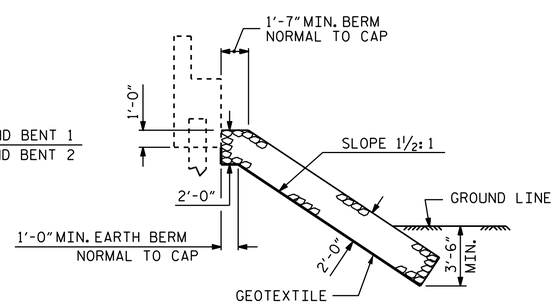

℄ SECTION

BERM RIP RAPPED

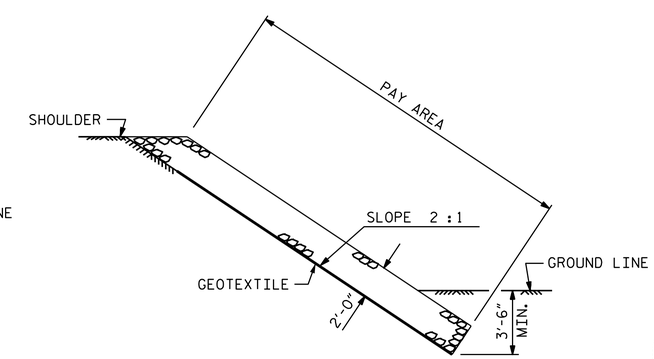

SECTION C-C

PROJECT NO. B-5151

GRANVILLE COUNTY

STATION: 14+17.00 -L-

NORTH CAROLINA PROFESSIONAL SEAL 29441 ENGINEER KRISTY W. ALFORD

DocuSigned by: F2458389308F40E...

12/16/2014

STATE OF NORTH CAROLINA

DEPARTMENT OF TRANSPORTATION

RALEIGH

STANDARD

RIP RAP DETAILS

REVISIONS							
NO.	BY:	DATE:	NO.	BY:	DATE:		
1			3				
2			4				

SHEET NO. S-16

TOTAL SHEETS 17

ASSEMBLED BY : D. SHACKELFORD DATE : 03/2014
CHECKED BY : Fr. LEA DATE : 03/2014

DRAWN BY : REK 1/84
CHECKED BY : RDU 1/84

REV. 5/1/06R TLA/GM
REV. 10/1/11 MAA/GM
REV. 12/21/11 MAA/GM

02-DEC-2014 09:00
O:\Structures\Plans\Misc\B-5151_SD_RR.dgn
jpadams

STD. NO. RR1 (Sht 3)