FIX. FIX.

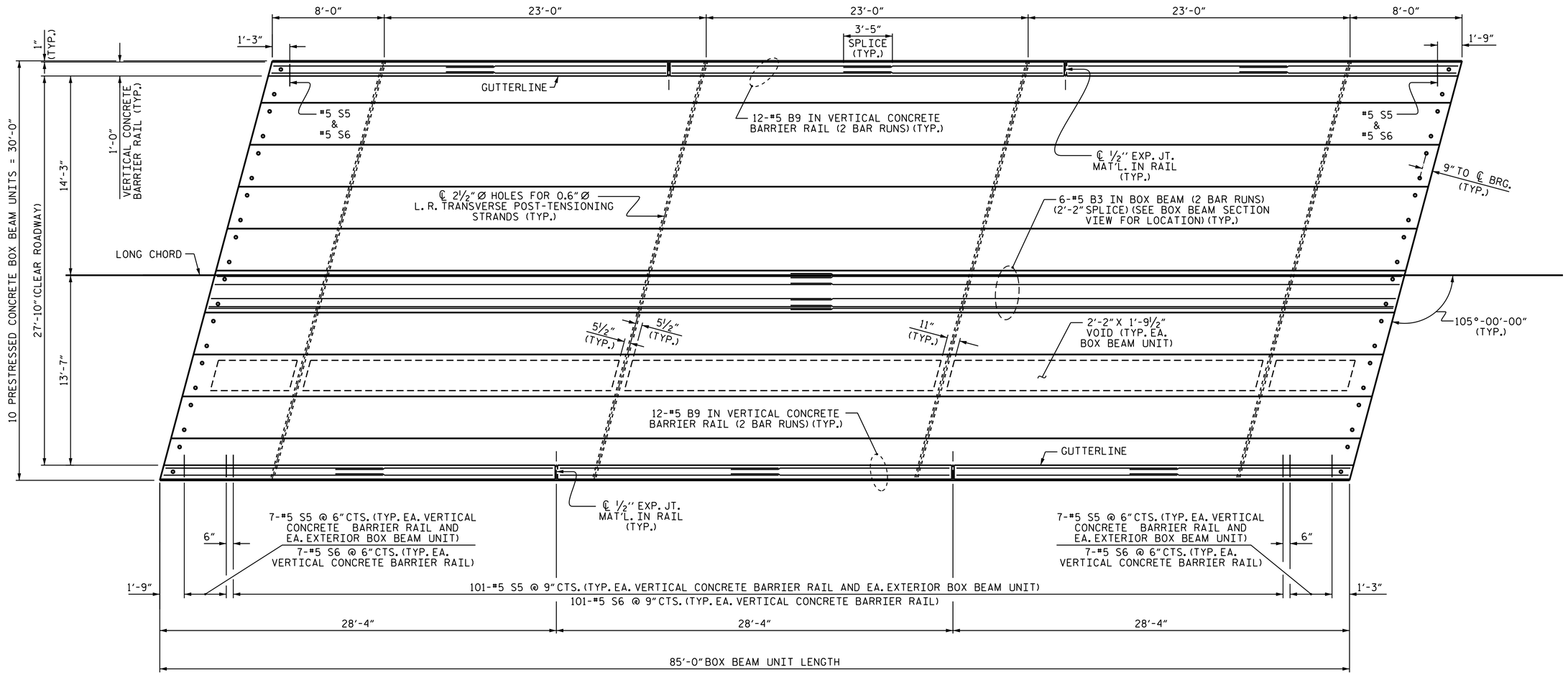

PLAN OF UNIT

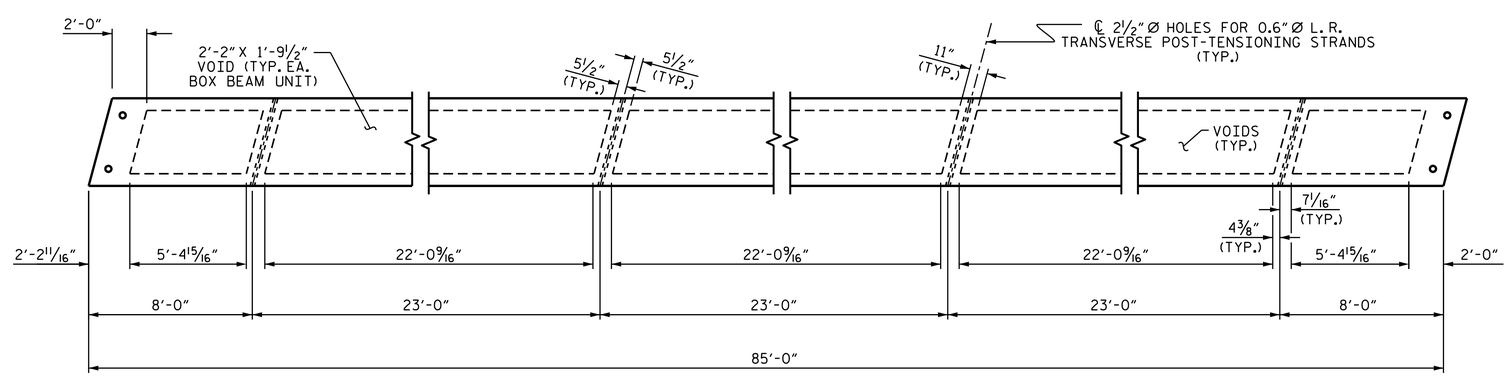

DIAPHRAGM AND VOID LAYOUT

NORTH CAROLINA PROFESSIONAL SEAL 29441 ENGINEER KRISTY W. ALFORD

DocuSigned by: F2458389308F40E...

12/16/2014

PROJECT NO. B-5151

GRANVILLE COUNTY

STATION: 14+17.00 -L-

SHEET 2 OF 5

STATE OF NORTH CAROLINA
DEPARTMENT OF TRANSPORTATION
RALEIGH

PLAN OF 85' UNIT
27'-10" CLEAR ROADWAY
105° SKEW

ASSEMBLED BY : D. SHACKELFORD	DATE : 01/2014
CHECKED BY : Fr. LEA	DATE : 03/2014
DRAWN BY : DGE 8/11	
CHECKED BY : TMG 11/11	

REVISIONS						SHEET NO.
NO.	BY:	DATE:	NO.	BY:	DATE:	S-5
1			3			TOTAL SHEETS
2			4			17

02-DEC-2014 08:59
O:\Structures\Plans\Superstructure\B-5151_SD_BX.dgn
jpadams

STD.NO.33PCBB_30_105S_85L