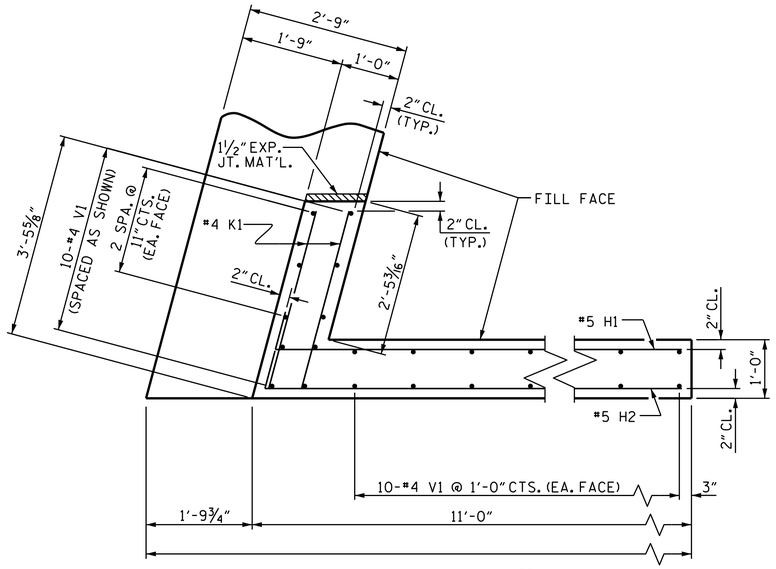

PLAN OF WING (W1)

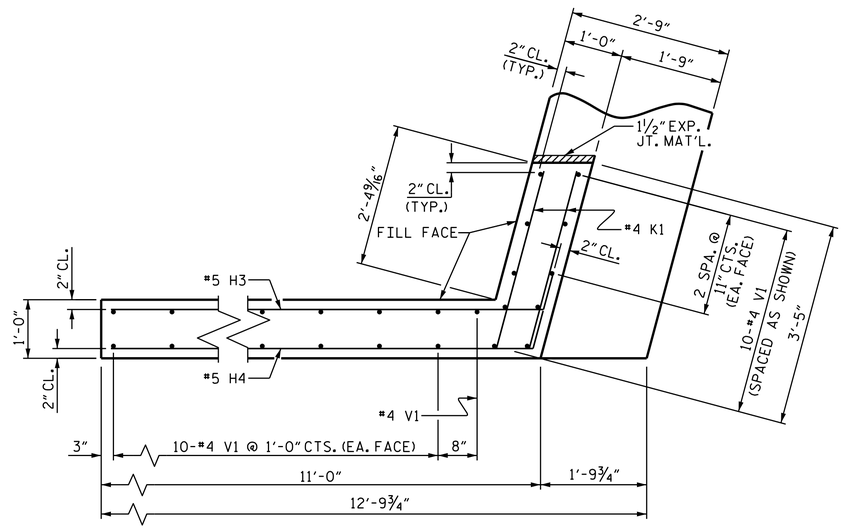

PLAN OF WING (W2)

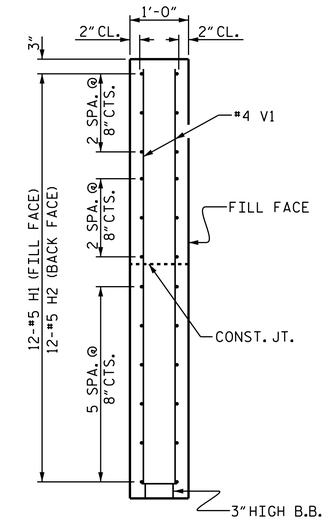

SECTION X-X

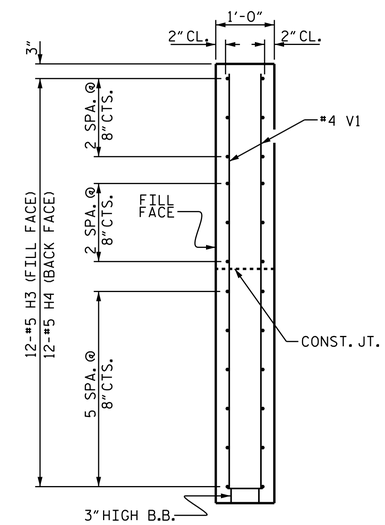

SECTION Y-Y

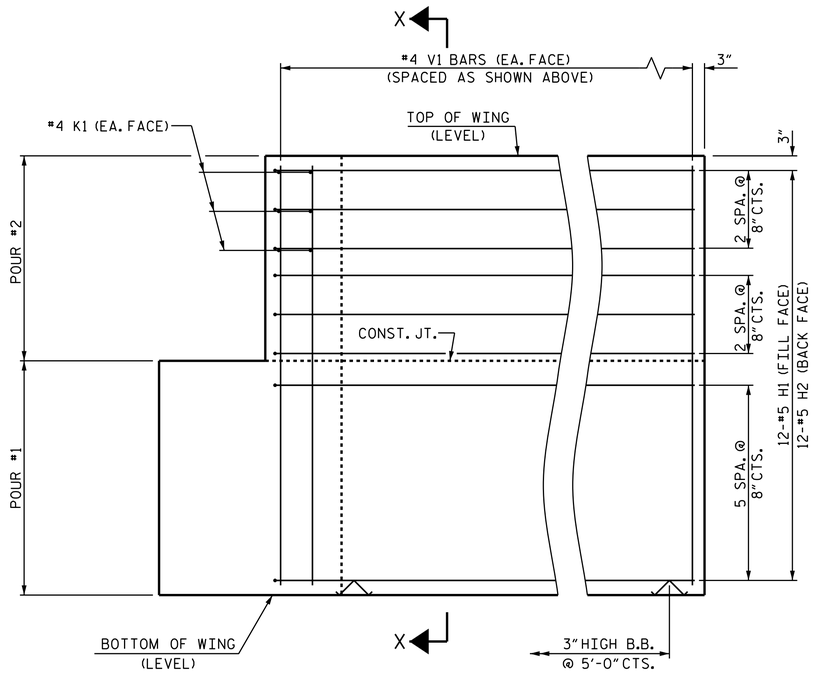

ELEVATION OF WING (W1)

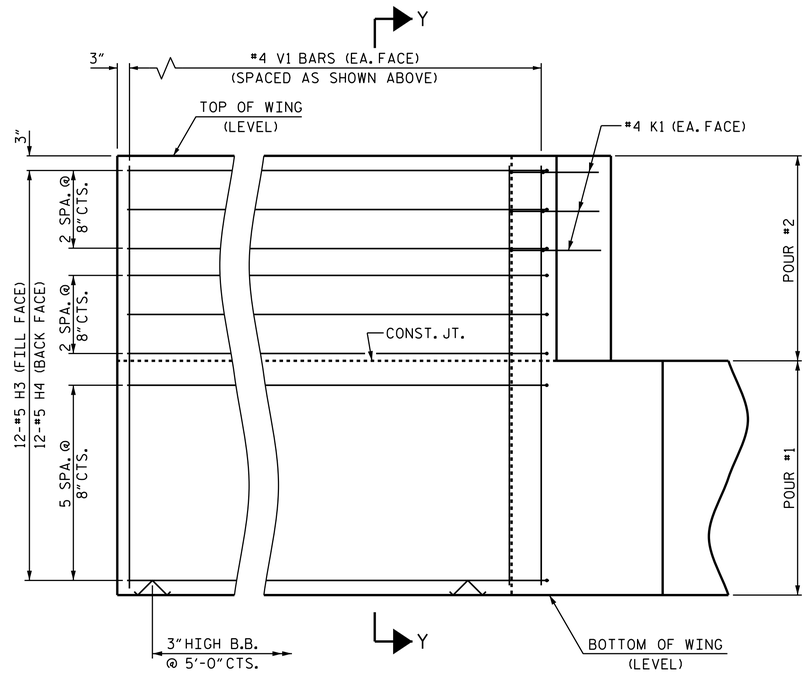

ELEVATION OF WING (W2)

WING DETAILS

PROJECT NO. B-5151

GRANVILLE COUNTY

STATION: 14+17.00 -L-

SHEET 2 OF 3

STATE OF NORTH CAROLINA
DEPARTMENT OF TRANSPORTATION
RALEIGH

SUBSTRUCTURE

END BENT 2
WING DETAILS

NORTH CAROLINA PROFESSIONAL SEAL 29441 ENGINEER KRISTY W. ALFORD

DocuSigned by:
F24583893DBF40E...

12/16/2014

ASSEMBLED BY : D. SHACKELFORD	DATE : 01/2014
CHECKED BY : Fr. LEA	DATE : 03/2014
DRAWN BY : WJH 12/11	
CHECKED BY : AAC 12/11	

REVISIONS						SHEET NO.
NO.	BY:	DATE:	NO.	BY:	DATE:	S-14
1			3			TOTAL SHEETS
2			4			17

02-DEC-2014 09:00
Q:\Structures\Plans\Substructure\B-5151_SD_E*.dgn
jpadams

STD. NO. EB_30_105S4_33BB