PROJECT REFERENCE NO.	SHEET NO.
B-4565	Sig. M2

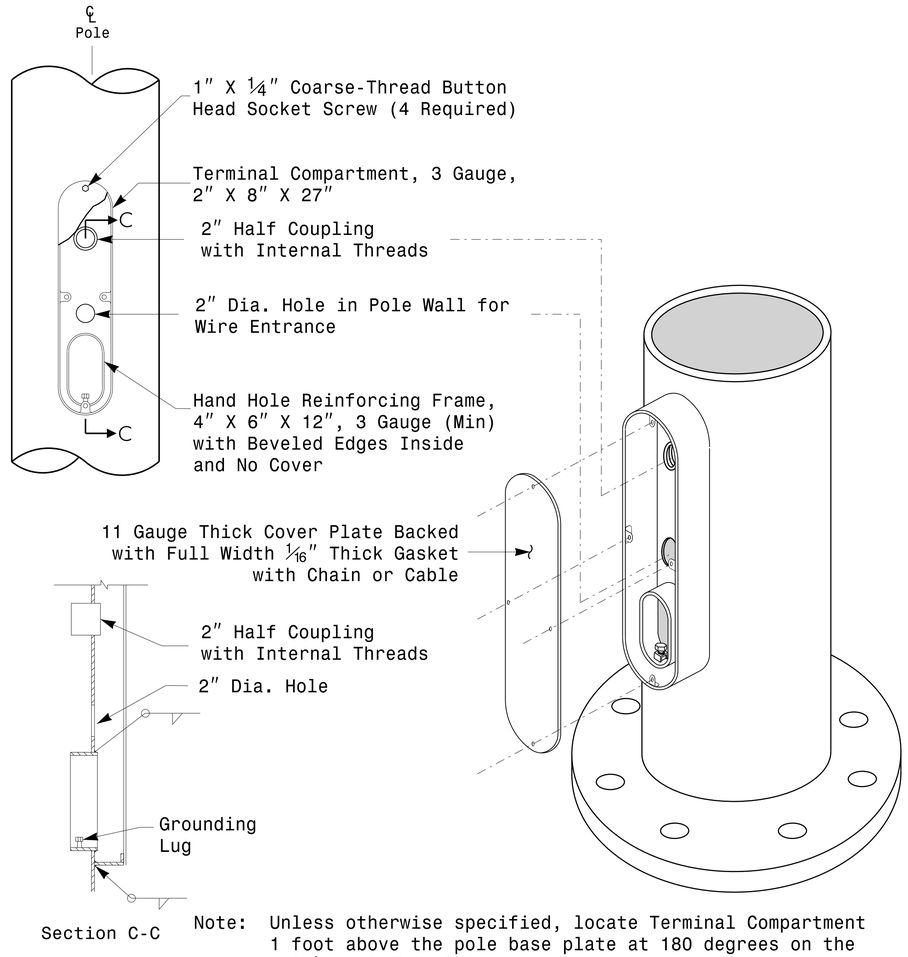

Note: Unless otherwise specified, locate Terminal Compartment 1 foot above the pole base plate at 180 degrees on the pole's radial index.

Terminal Compartment Detail

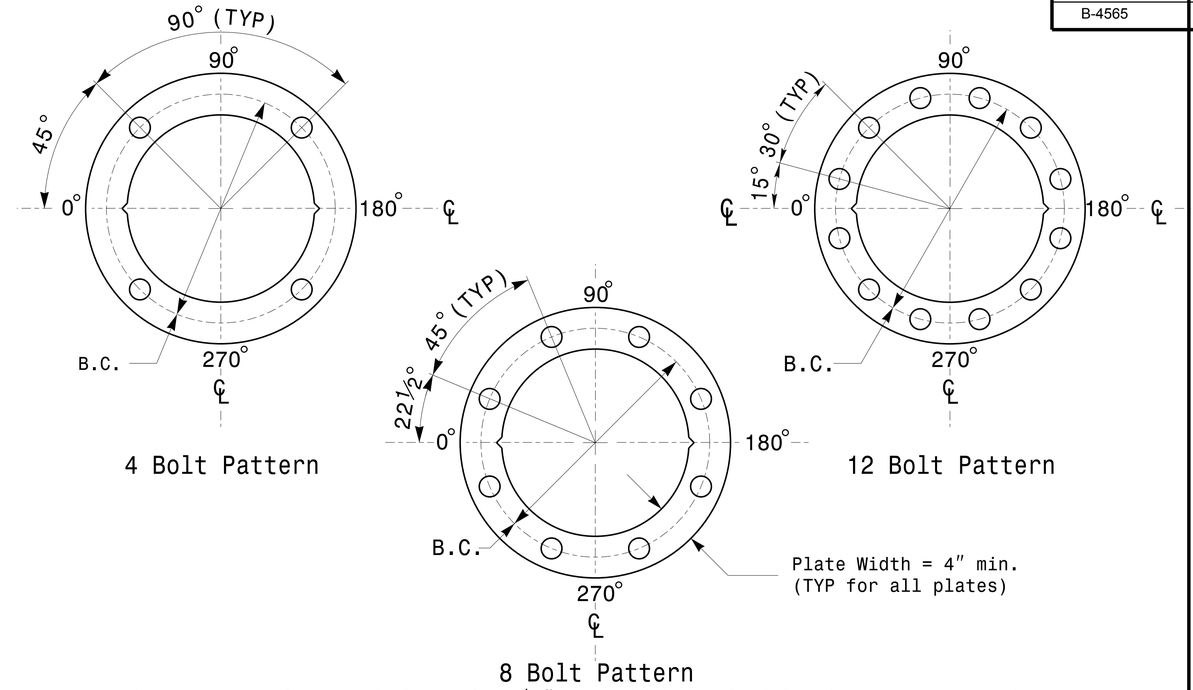

Construct Templates and Plates from ¼″ min. thick Steel. Galvanizing is not required.

Base Plate Template and Anchor Bolt Lock Plate Details

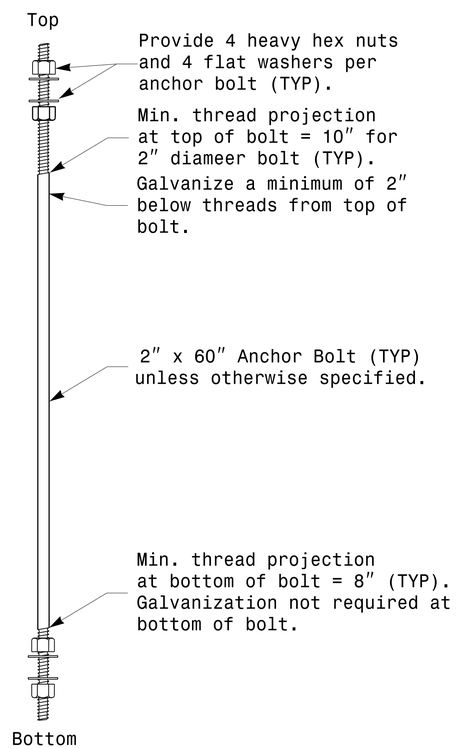

Anchor Bolt Detail

Note: See Strain Pole drawing M3 and Mast arm drawing M4 for base plate weld details.

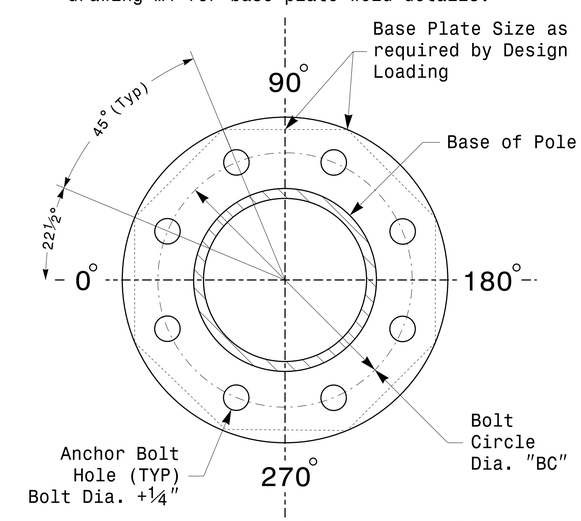

8 Bolt Base Plate Detail

MFG _____ MFG. DATE: MM/YY
SHAFT D/T/L/Y ----/----/----/----
ARM-A D/T/L/Y ----/----/----/----
----/----/----/----
ARM-B D/T/L/Y ----/----/----/----
----/----/----/----
A.B. DIA./B.C./L/Y ----/----/----/----
NCDOT STANDARD ----------

Shaft I.D. Tag
(Provide on Strain Poles and Mast Arm Poles)

MFG _____ MFG. DATE: MM/YY
SECTION D/T/L/Y ----/----/----/----
NCDOT STANDARD ----------

Arm I.D. Tag
(Provide on each section of a multi-section mast arm)

Notes:
1) D= Diameter, T= Thickness, L= Length, Y= Yield Strength
2) A.B. = Anchor Bolt
3) B.C. = Bolt Circle of Anchor Bolts
4) If Custom Design, use "NCDOT STANDARD" line for pole I.D. number and Signal Inv. Number.
5) See drawing M4 for mounting positions of I.D. tags.

Identification Tag Details

Fabrication Details – All Poles

Prepared in the Offices of:
Transportation Mobility and Safety Division
Signal Design Section
750 N.Greenfield Pkwy,Garner,NC 27529

Typical Fabrication Details
Common To
All Metal Poles

PLAN DATE:	AUGUST 2013	DESIGNED BY:	C.F. ANDREWS
PREPARED BY:	N. BITTING	REVIEWED BY:	D.C. SARKAR

SCALE 0 NA NONE

REVISIONS	INIT.	DATE

SEAL
NORTH CAROLINA PROFESSIONAL SEAL 028094 ENGINEER DEBESH C. SARKAR
DocuSigned by: Debesh C. Sarkar 44EBE32E147E4C4... 8/26/2014
DATE
SIG. INVENTORY NO.

26-AUG-2014 08:55
S:\TITLES\LM\TIS\Signals\Signal Design Section\Eastern Region\M Sheets\2012_M2_Fab Details All Poles.dgn
jgalloway