PROJECT REFERENCE NO.	SHEET NO.
B-4565	Sig. 2.0

PHASING DIAGRAM

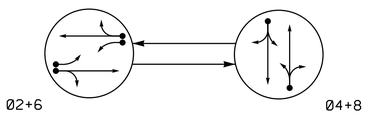

PHASING DIAGRAM DETECTION LEGEND

- DETECTED MOVEMENT
- UNDETECTED MOVEMENT (OVERLAP)
- UNSIGNALIZED MOVEMENT
- PEDESTRIAN MOVEMENT

TABLE OF OPERATION

SIGNAL FACE	PHASE 02+6	PHASE 04+8	FLASH
21,22	G	R	Y
41,42	R	G	R
61,62	G	R	Y
81,82	R	G	R

SIGNAL FACE I.D.

All Heads L.E.D.

21,22
41,42
61,62
81,82

OASIS 2070 LOOP & DETECTOR INSTALLATION CHART

INDUCTIVE LOOPS					DETECTOR PROGRAMMING						
LOOP	SIZE (FT)	DISTANCE FROM STOPBAR (FT)	TURNS	NEW LOOP	PHASE	CALLING	EXTENSION	FULL TIME DELAY	STRETCH TIME	DELAY TIME	SYSTEM LOOP	NEW CARD
2A	6X6	420	6	Y	2	Y	Y	-	-	-	-	Y
4A	6X40	+5	2-4-2	Y	4	Y	Y	-	-	-	-	Y
4B	6X15	+5	3	Y	4	Y	Y	-	-	15	-	Y
6A	6X6	420	6	Y	6	Y	Y	-	-	-	-	Y
8A	6X40	+5	2-4-2	Y	8	Y	Y	-	-	-	-	Y
8B	6X15	+8	3	Y	8	Y	Y	-	-	15	-	Y

2 Phase
Fully Actuated
TEMPORARY SIGNAL

NOTES

1. Refer to "Roadway Standard Drawings NCDOT" dated January 2012 and "Standard Specifications for Roads and Structures" dated January 2012.
2. Do not program signal for late night flashing operation unless otherwise directed by the Engineer.
3. Set all detector units to presence mode.
4. Locate new cabinet so as not to obstruct sight distance of vehicles turning right on red.
5. Right of Way is approximate.

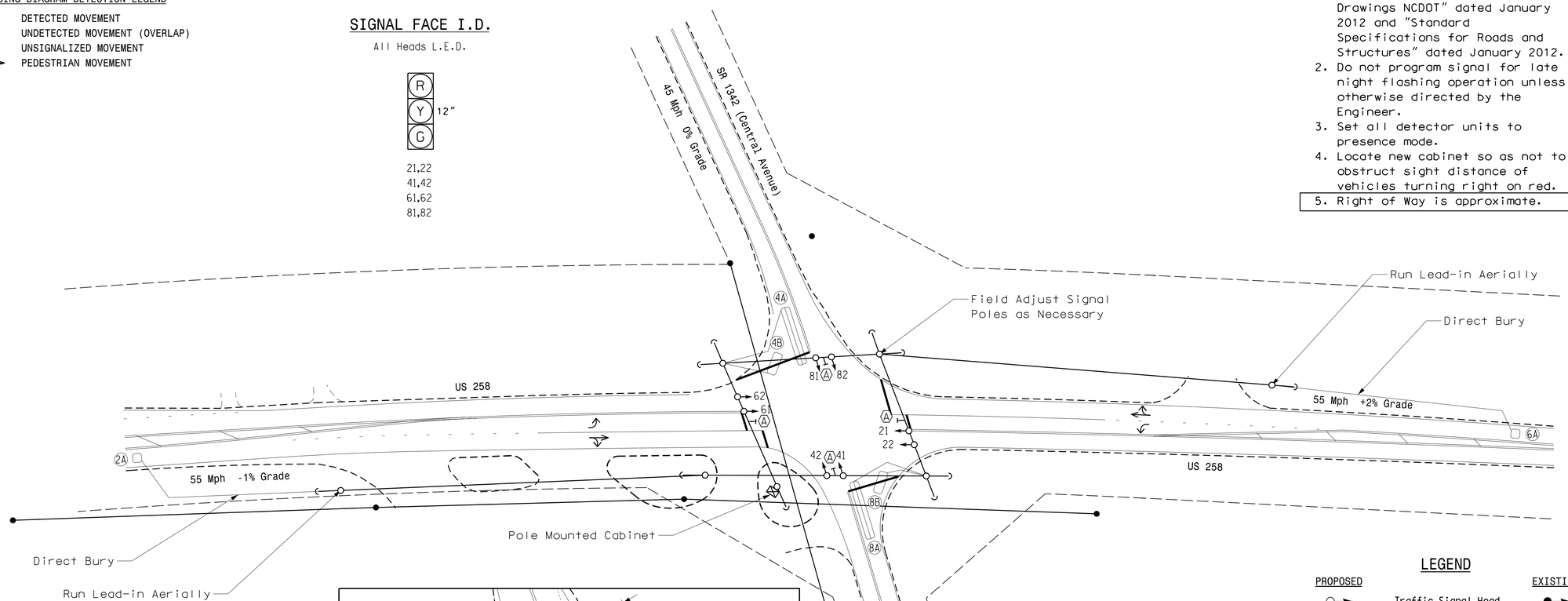

OASIS 2070 TIMING CHART

FEATURE	PHASE 2	PHASE 4	PHASE 6	PHASE 8
Min Green 1 *	14	7	14	7
Extension 1 *	6.0	2.0	6.0	2.0
Max Green 1 *	90	25	90	25
Yellow Clearance	5.3	4.5	5.0	4.9
Red Clearance	1.0	1.1	1.0	1.1
Walk 1 *	-	-	-	-
Don't Walk 1	-	-	-	-
Seconds Per Actuation *	2.0	-	2.0	-
Max Variable Initial *	46	-	46	-
Time Before Reduction *	15	-	15	-
Time To Reduce *	45	-	45	-
Minimum Gap	3.4	-	3.4	-
Recall Mode	MIN RECALL	-	MIN RECALL	-
Vehicle Call Memory	YELLOW	-	YELLOW	-
Dual Entry	-	ON	-	ON
Simultaneous Gap	ON	ON	ON	ON

* These values may be field adjusted. Do not adjust Min Green and Extension times for phases 2 and 6 lower than what is shown. Min Green for all other phases should not be lower than 4 seconds.

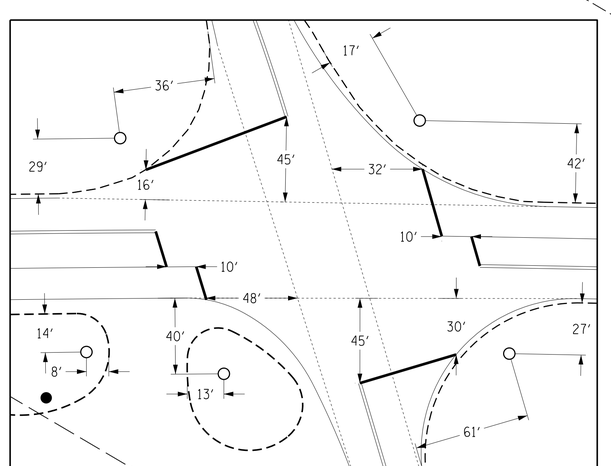

STOPBAR AND POLE LOCATIONS

LEGEND

PROPOSED		EXISTING
	Traffic Signal Head	
	Modified Signal Head	N/A
	Sign	
	Pedestrian Signal Head With Push Button & Sign	
	Signal Pole with Guy	
	Signal Pole with Sidewalk Guy	
	Inductive Loop Detector	
	Controller & Cabinet	
	Junction Box	
	2-in Underground Conduit	
N/A	Right of Way	
	Directional Arrow	
A	"TEMPORARY SIGNAL" Sign	A

Temporary Signal

Prepared in the Offices of:
Transportation Mobility and Safety Division
Signal Design Section
750 N.Greenfield Pkwy,Garner,NC 27529

US 258
At
SR 1342
(Central Ave)/(Will Baker Rd)

Division 2 Lenoir County Kinston

PLAN DATE: August 2014	REVIEWED BY: PLA
PREPARED BY: JPG	REVIEWED BY:

SCALE 0 40 1"=40'

REVISIONS	INIT.	DATE

SEAL
NORTH CAROLINA PROFESSIONAL SEAL 029904 ENGINEER JASON P. GALLOWAY

DocuSigned by: Jason Galloway F700EA704818410... 8/26/2014 DATE

SIG. INVENTORY NO. 02-0504

26-AUG-2014 10:37
R:\Traffic\Designals\Designals\020504_sig_dsn_20140826.dgn
jgalloway