PROJECT REFERENCE NO.	SHEET NO.
B-4565	Sig. M3

Fabrication Details – Strain Poles

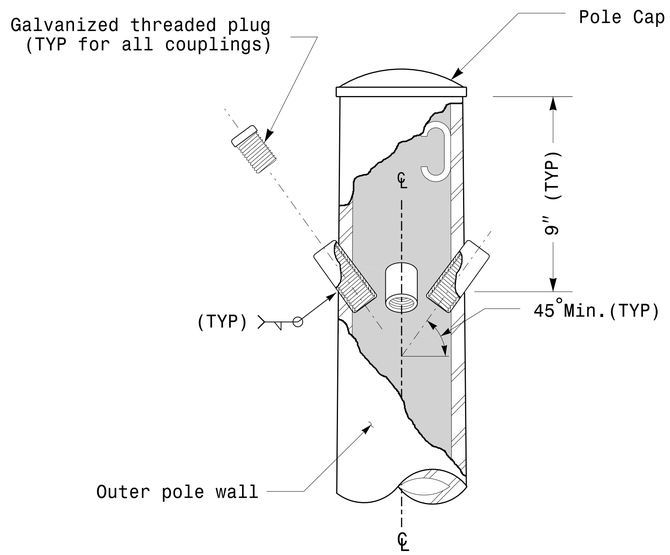

Cable Entrances at Top of Pole

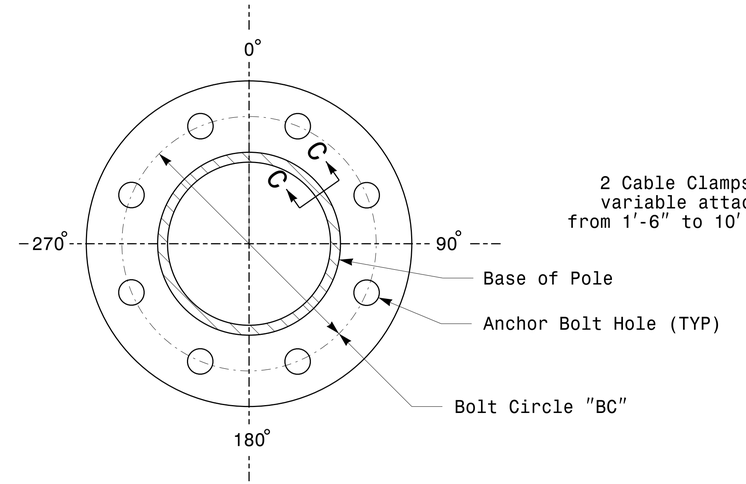

Section B-B

(See drawing M2)

Pole Base Plate

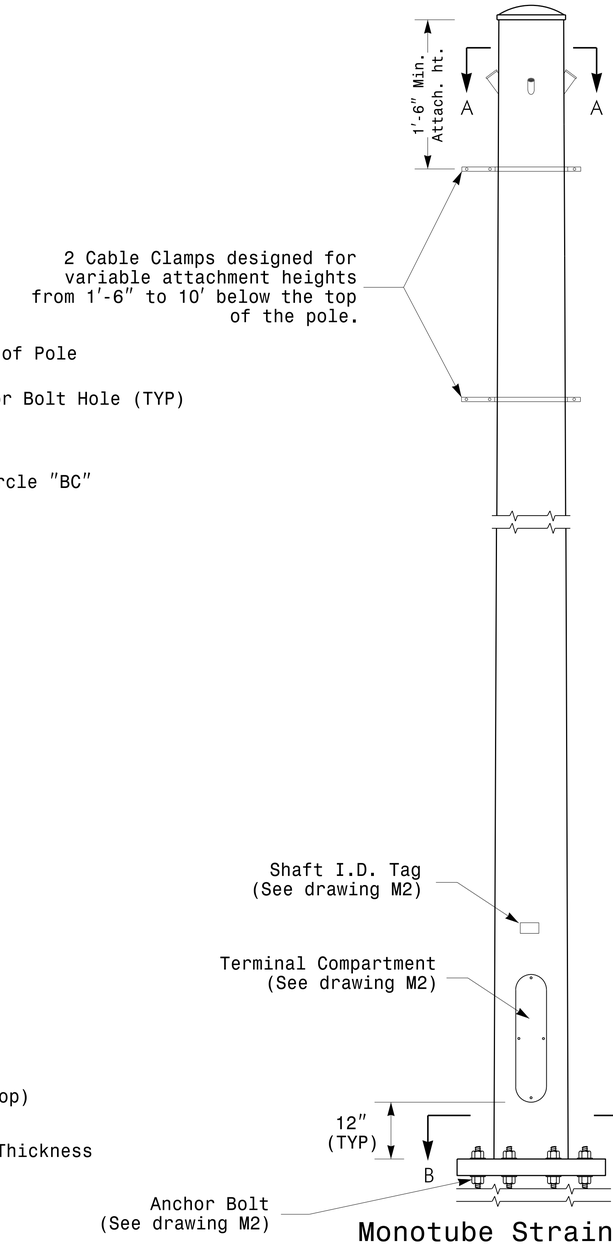

Monotube Strain Pole
(.14″/Foot Taper)

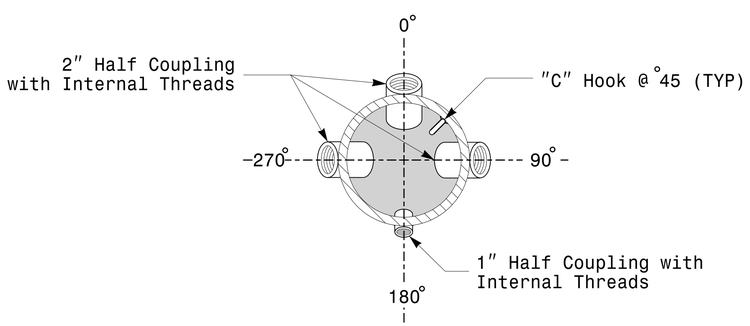

Section A-A

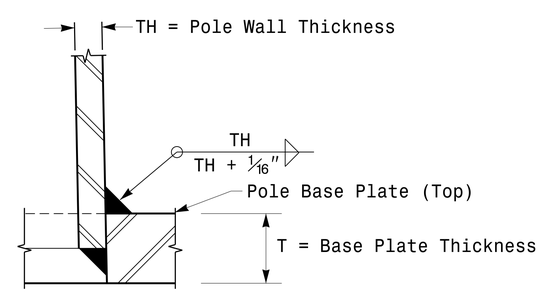

Section C-C

Radial Orientation for Factory Installed Accessories at Top of Pole

Socket Connection Weld Detail

Prepared in the Offices of:
Transportation Mobility and Safety Division
Signal Design Section
750 N.Greenfield Pkwy.Garner,NC 27529

Typical Fabrication Details
For Strain Poles

PLAN DATE:	AUGUST 2013	DESIGNED BY:	C.F. ANDREWS
PREPARED BY:	N. BITTING	REVIEWED BY:	D.C. SARKAR

SCALE 0 NA NONE

REVISIONS	INIT.	DATE

SEAL
NORTH CAROLINA PROFESSIONAL SEAL 028094 ENGINEER DEBESH C. SARKAR

DocuSigned by: Debesh C. Sarkar 44E8E32E147E4C4... 8/26/2014
DATE

SIG. INVENTORY NO.

26-AUG-2014 08:51
S:\TSG\ITS\Signals\Signal Design Section\Eastern Region\M Sheets\2012.M3.Fab Details Strain Poles.dgn
jgallaway