PROJ. REFERENCE NO.	SHEET NO.
B-4565	TMP-5A

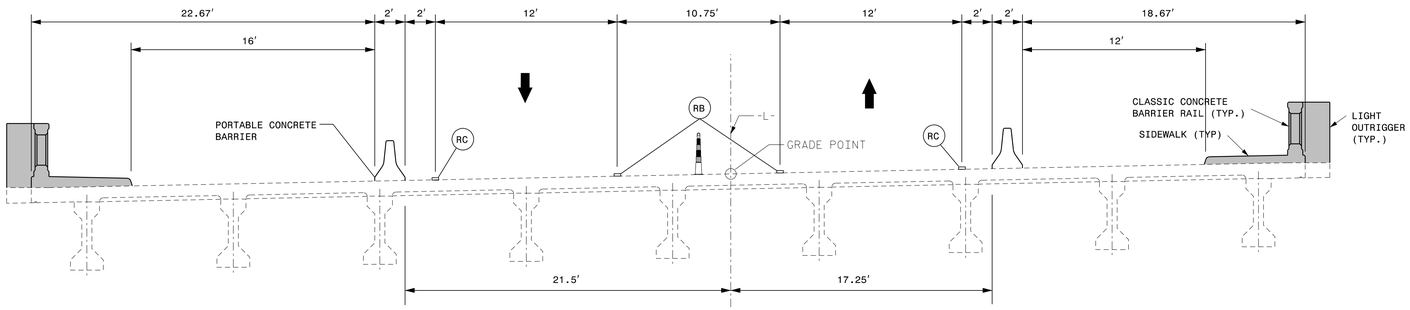

DETAIL A-A

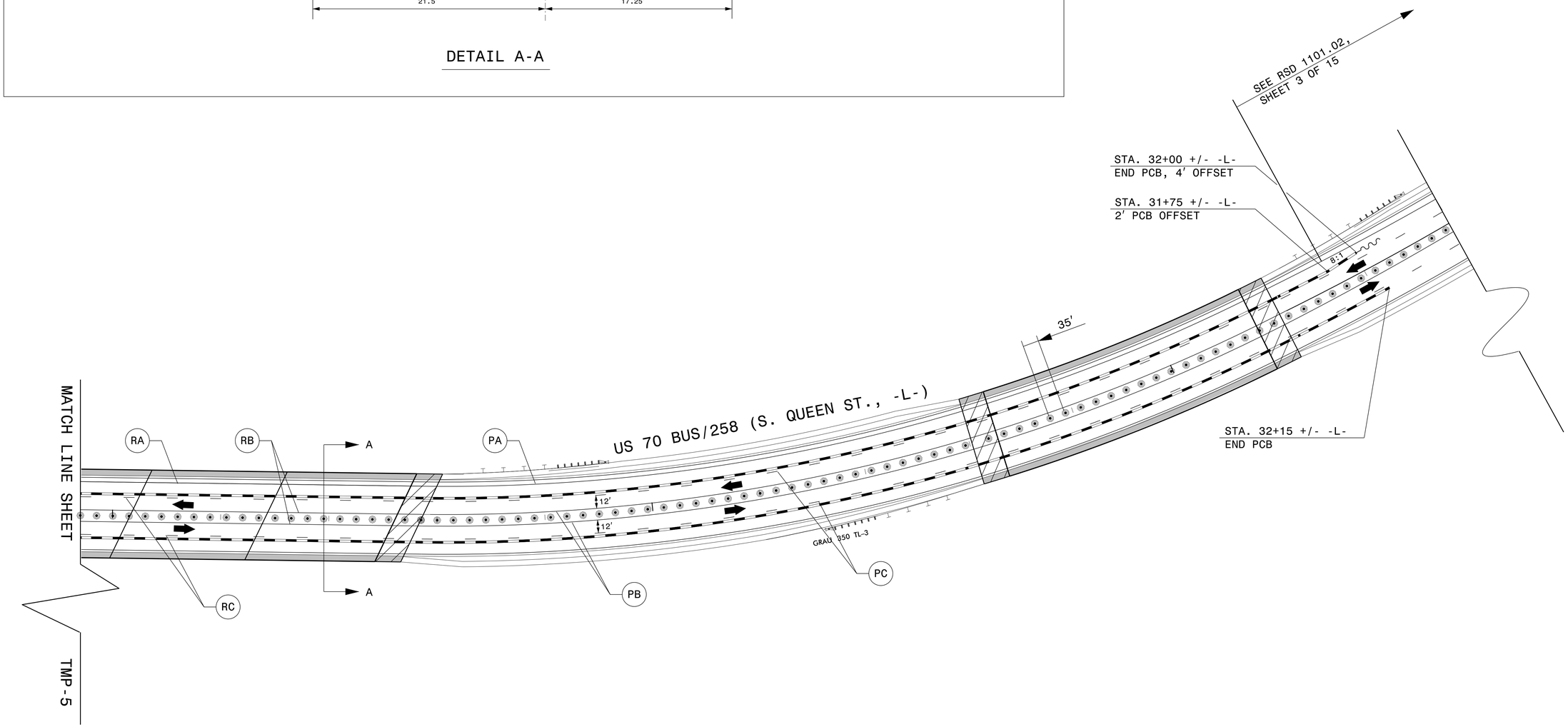

APPROVED: DocuSigned by: Steve Lentz DATE: 11/3/2014

SEAL

TEMPORARY TRAFFIC CONTROL DETAIL PHASE II

10/29/2014
P:\TIPProjects-B\B4565\Traffic\TrafficControl\TCP\B4565_TC_TMP_05A.dgn
Users:ngreen