PROJ. REFERENCE NO.	SHEET NO.
B-4565	TMP-6B

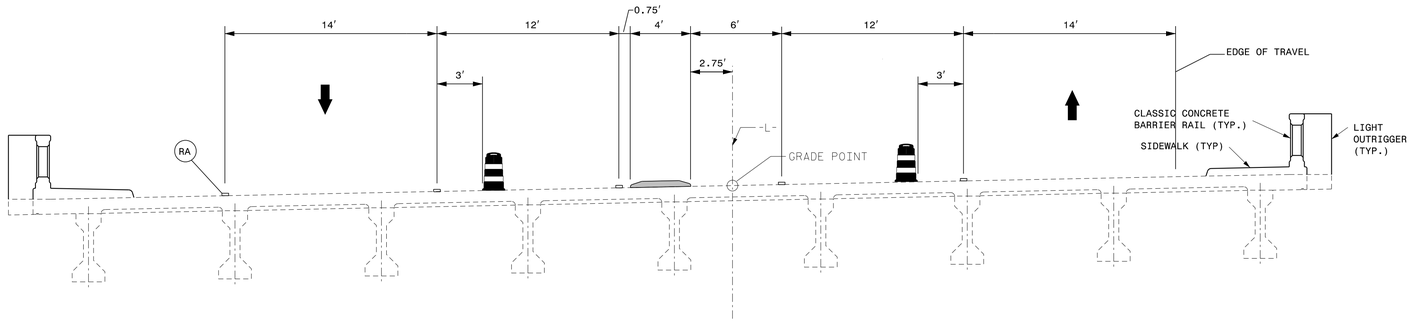

DETAIL A-A

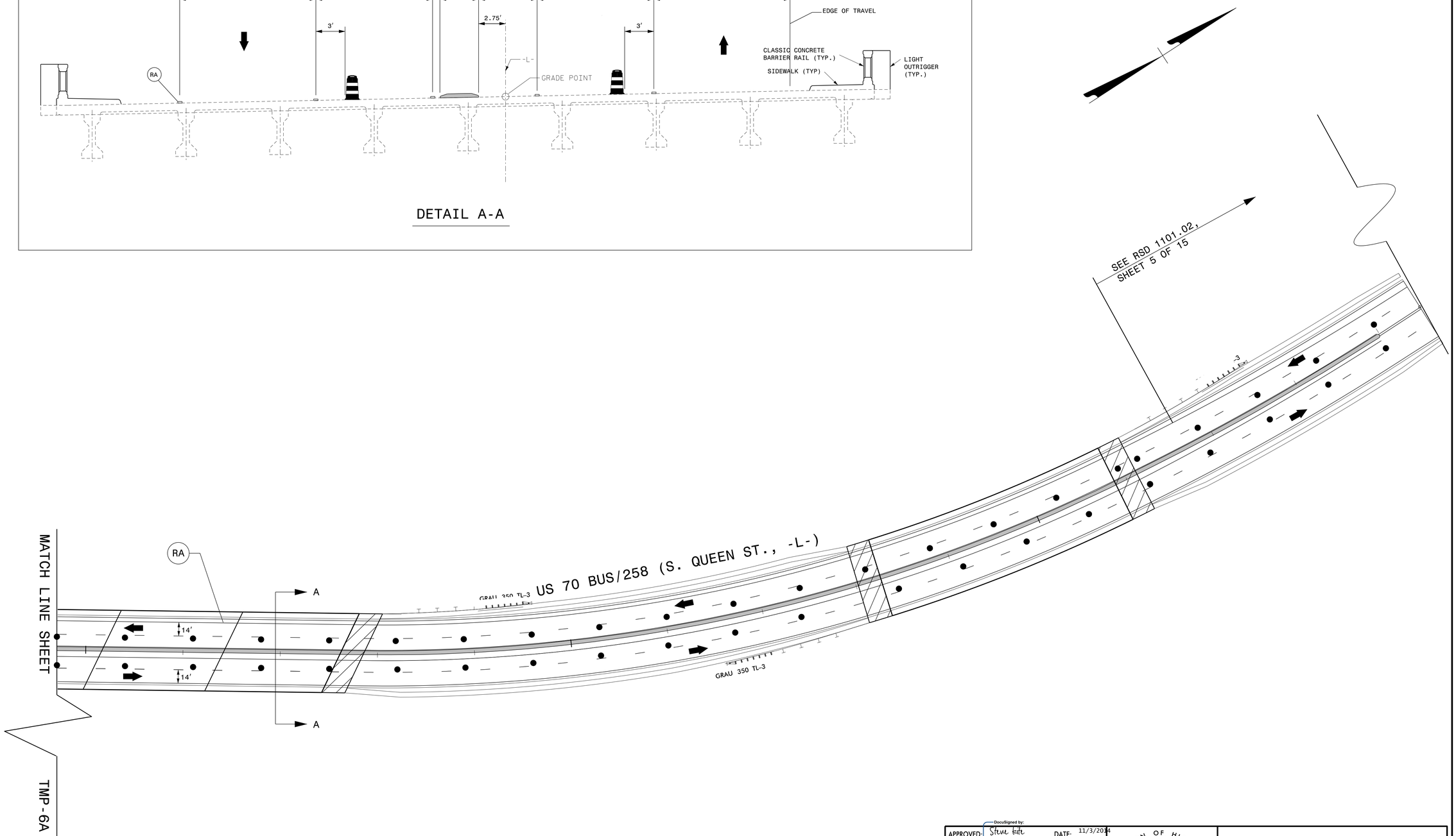

APPROVED: DocuSigned by: Steve Keith 6D9CD9D4D9D443... DATE: 11/3/2014

SEAL

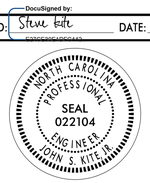

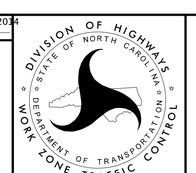

TEMPORARY TRAFFIC CONTROL DETAIL PHASE III

10/29/2014
P:\TIPProjects-B\B4565\Traffic\TrafficControl\TCP\B4565_TC_TMP_06B.dgn
User:sngreen