PROJECT REFERENCE NO.	SHEET NO.
U-3615B	UC-3A

DESIGNED BY: DMP
DRAWN BY: DMP
CHECKED BY: DMP
APPROVED BY:
REVISED:

NORTH CAROLINA DEPARTMENT OF TRANSPORTATION

UTILITIES ENGINEERING SEC.
PHONE: (919) 707-6690
FAX: (919) 250-4151

NORTH CAROLINA PROFESSIONAL SEAL 26457 ENGINEER ANDREW P. LARRICK
DocuSigned by:
3B8F1A0A0A0A4A0...
10/6/2014

UTILITY CONSTRUCTION PLANS ONLY

UTILITY CONSTRUCTION

REVISIONS

8/17/99

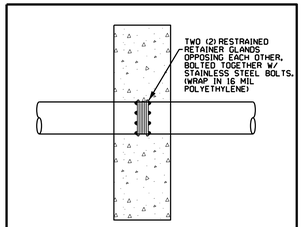

THRUST COLLAR ANCHOR

MAXIMUM TRENCH WIDTH
AT TOP OF PIPE

NOMINAL PIPE SIZE (INCHES)	TRENCH WIDTH (INCHES)	NOMINAL PIPE SIZE (INCHES)	TRENCH WIDTH (INCHES)
4	28	20	44
6	30	24	48
8	32	30	54
10	34	36	60
12	36	42	66
14	38	48	72
16	40	54	78
18	42		

NOTES:

1. MANHOLES SHALL BE PRECAST CONCRETE, CONFORMING TO SECTION 1525 OF THE NCDOT STANDARD SPECIFICATIONS.
2. FOR PVC FORCE MAINS OF ANY SIZE, OR DI FORCE MAINS SMALLER THAN 8" DIA., USE SERVICE SADDLE.

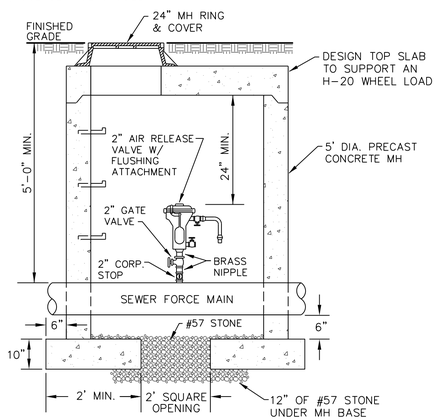

SECTION THRU MANHOLE

2" AIR RELEASE VALVE IN MANHOLE
FOR SEWER FORCE MAIN
(NOT TO SCALE)

TRENCH DETAIL

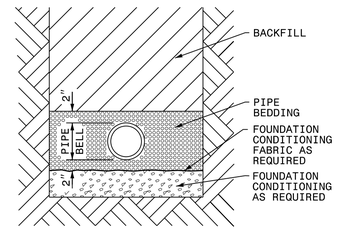

PLACE FOUNDATION CONDITIONING MATERIAL BELOW BEDDING IF REQUIRED, AS DIRECTED BY ENGINEER. PIPE BEDDED IN SELECT MATERIAL, CLASS II (TYPE 1) OR CLASS III. TRENCH BACKFILLED IN LOOSE 6" LAYERS COMPACTED TO TOP OF TRENCH USING LOCAL EXCAVATED MATERIAL IF APPROVED BY THE ENGINEER, OR SELECT MATERIAL. ALL MATERIAL SHALL BE FREE OF ROCKS, FOREIGN MATERIAL, AND FROZEN EARTH. COMPACTION SHALL BE TO APPROXIMATELY 95% DENSITY IN ACCORDANCE WITH AASHTO T-99 AS MODIFIED BY THE DEPARTMENT OF TRANSPORTATION.

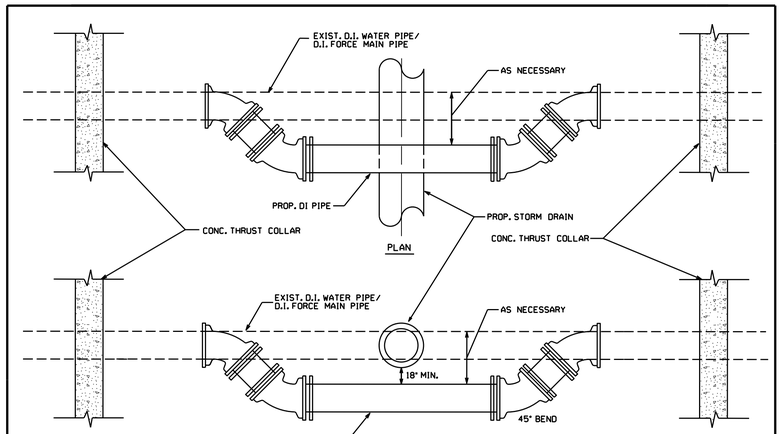

NOTE:

1. ALL FITTINGS SHALL BE RESTRAINED USING RESTRAINED RETAINER GLANDS.
2. CONC. THRUST BLOCK SHALL BE PLACED AND CURED THREE DAYS PRIOR TO CUTTING EXISTING PIPE.

•NTS

RELOCATION OF D.I. WATER PIPE OR D.I. FORCE MAIN PIPE
AT PROPOSED STORM DRAINAGE AS SHOWN ON PLANS

UTILITY CONSTRUCTION PLANS PREPARED BY:
DAVIS • MARTIN • POWELL
ENGINEERS & SURVEYORS
6415 OLD PLANK RD. HIGH POINT, NC 27265
PHONE: (336)886-4821 FAX: (336)886-4458
WWW.DMP-INC.COM LICENSE: F-0245