PROJECT REFERENCE NO.	SHEET NO.
U-3615B	RF-3
R/W SHEET NO.	
ROADWAY DESIGN ENGINEER	HYDRAULICS ENGINEER

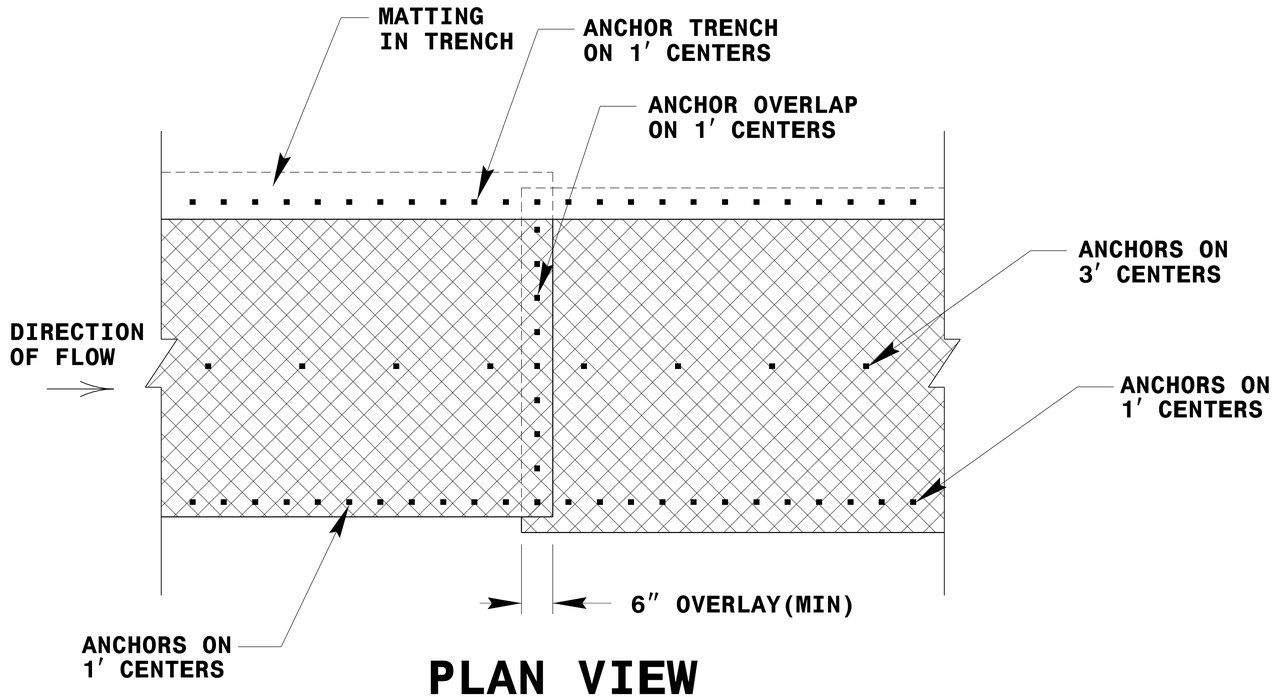

PLAN VIEW

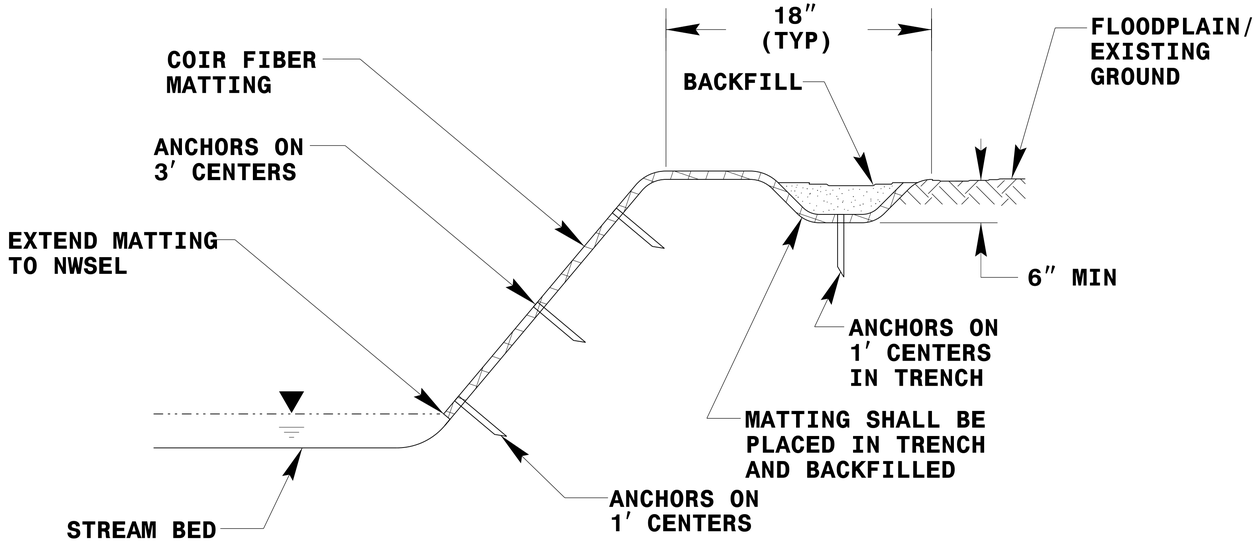

TYPICAL CROSS SECTION

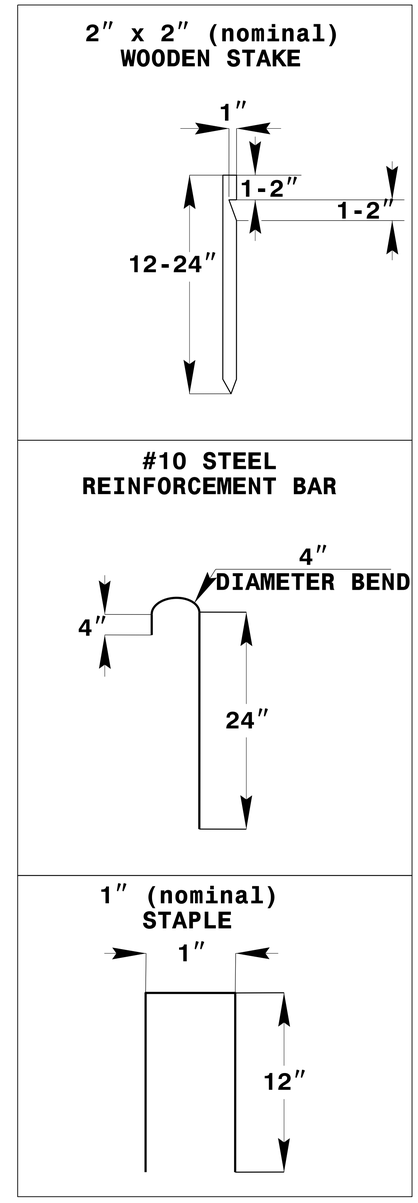

ANCHOR OPTIONS

COIR FIBER MATTING DETAIL

NOT TO SCALE

STREAMBANK REFORESTATION
DETAIL SHEET 2 OF 2
N.C.D.O.T. - ROADSIDE ENVIRONMENTAL UNIT