DocuSign Envelope ID: BD04A6F0-193C-4758-B1A2-A87F8B7C208F

5/14/99

PROJECT REFERENCE NO.	SHEET NO.
U-3615B	2A-5
R/W SHEET NO.	
ROADWAY DESIGN ENGINEER	PAVEMENT DESIGN ENGINEER

WETHERILL ENGINEERING
559 Jones Franklin Rd. Suite 164
Raleigh, N.C. 27606
Liscense No. F-0377
Bus: 919 851 8077
Fax: 919 851 8107
TRANSPORTATION PLANNING/DESIGN - BRIDGE/STRUCTURE DESIGN
CIVIL/SITE DESIGN - GIS/GPS - CONSTRUCTION OBSERVATION

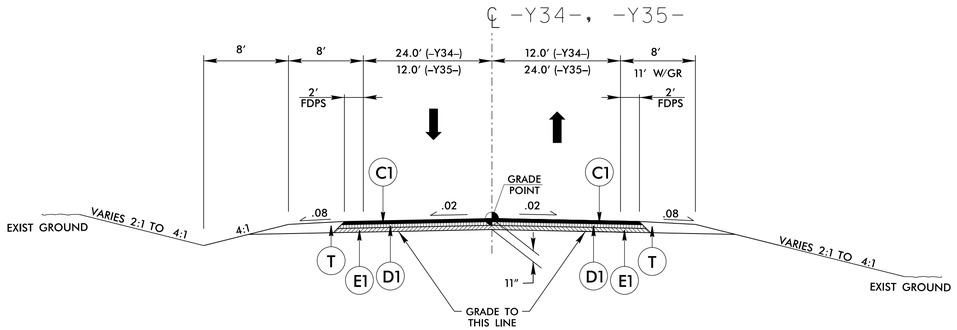

TYPICAL SECTION NO. 12

USE TYPICAL SECTION NO.12

-Y34- STA. 10+50.38 TO STA. 13+50.00
-Y35- STA. 12+00.00 TO STA. 14+07.47

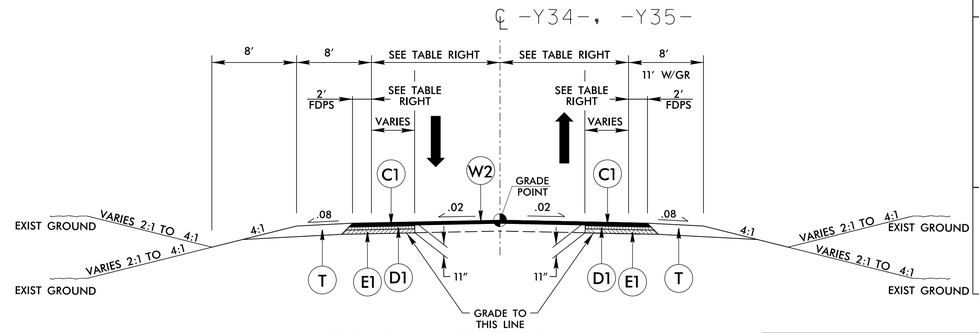

TYPICAL SECTION NO. 13

USE TYPICAL SECTION NO.13

-Y34- STA. 13+50.00 TO STA. 14+96.04
-Y35- STA. 10+22.26 TO STA. 12+00.00

T.S. NO.	LINE	EXISTING WIDTH LT.	EXISTING WIDTH RT.	PROPOSED WIDENING LT.	PROPOSED WIDENING RT.
13	-Y34-	11.14′-24′	10′-12′	0′-12.23′	0′-0.86′
13	-Y35-	11.81′-12′	12.5′-24′	0′	0′-12.34′

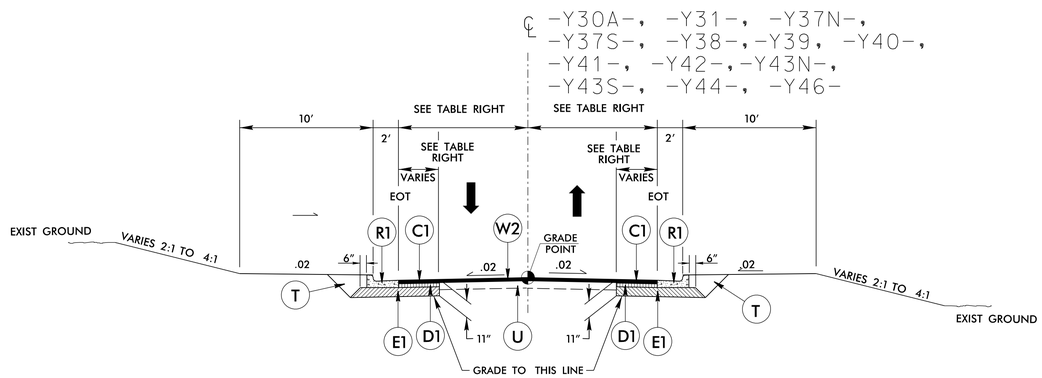

TYPICAL SECTION NO. 14

USE TYPICAL SECTION NO.14

-Y30A- STA. 10+97.72 TO STA. 11+47.72
-Y31- STA. 11+31.63 TO STA. 11+75.00
-Y37N- STA. 14+15.00 TO STA. 16+10.21
-Y37S- STA. 10+37.50 TO STA. 11+62.96
-Y38- STA. 10+37.51 TO STA. 11+63.00
-Y39- STA. 13+31.00 TO STA. 14+43.73
-Y40- STA. 11+37.80 TO STA. 11+85.15
-Y41- STA. 10+37.60 TO STA. 11+75.00
-Y42- STA. 10+37.57 TO STA. 11+74.45
-Y43N- STA. 10+40.36 TO STA. 12+55.36
-Y43S- STA. 10+37.58 TO STA. 11+55.00
-Y44- STA. 12+00.00 TO STA. 13+41.51
-Y46- STA. 10+41.45 TO STA. 11+39.20

T.S. NO.	LINE	EXISTING WIDTH LT.	EXISTING WIDTH RT.	PROPOSED WIDENING LT.	PROPOSED WIDENING RT.
14	-Y30A-	11.07′-15.0′	11.06′-15.0′	0′-3.82′	0′-3.95′
14	-Y31-	13.12′-15.0′	12.95′-15.0′	0′-1.86′	0′-2.07′
14	-Y37N-	14.06′-20.0′	12.8′-20.6′	0′	0′
14	-Y37S-	13.35′-15.00′	14.29′-15.0′	0′-1.19′	0′-1.0′
14	-Y38-	13.97′-15.0′	13.64′-15.0′	0′-1.24′	0′-1.28′
14	-Y39-	16.0′-21.56′	16.0′-20.49′	0′	0′
14	-Y40-	13.98′-15.0′	13.95′-15.0′	0′-1.06′	0′-1.04′
14	-Y41-	12.90′-15.0′	12.96′-15.0′	0′-2.09′	0′-2.00′
14	-Y42-	12.0′-15.0′	12.0′-15.0′	0′-3.10′	0′-3.01′
14	-Y43N-	14.19′-16.50′	13.64′-16.50′	0′-2.52′	0′-1.93′
14	-Y43S-	24.00′	12.0′	0′	0′
14	-Y44-	15.49′-16.0′	16.48′-16.0′	0′	0′
14	-Y46-	17.0′-24.67′	17.0′-25.0′	0′	0′

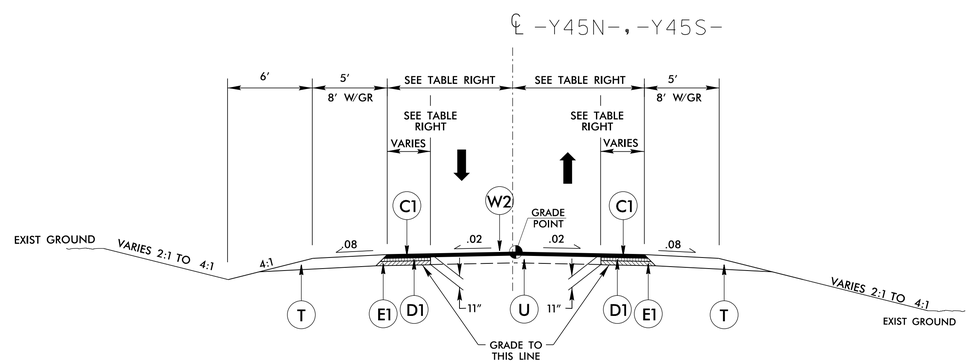

TYPICAL SECTION NO. 15

USE TYPICAL SECTION NO.15

-Y45N- STA. 11+97.82 TO STA. 12+98.02
-Y45S- STA. 10+37.57 TO STA. 11+66.74

T.S. NO.	LINE	EXISTING WIDTH LT.	EXISTING WIDTH RT.	PROPOSED WIDENING LT.	PROPOSED WIDENING RT.
15	-Y45N-	11.04′-15′	12.71′-15′	4.07′-0′	3.85′-0′
15	-Y45S-	10.76′-15′	10.92′-15′	4.09′-0′	4.05′-0′

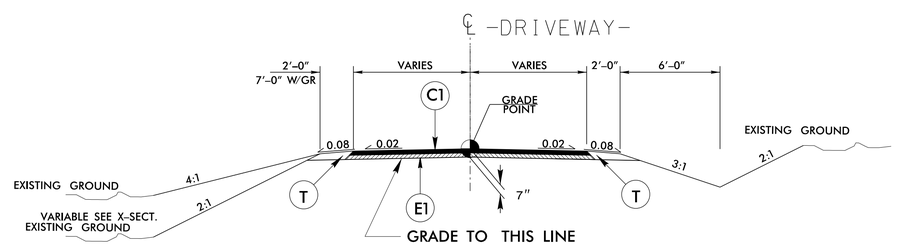

TYPICAL SECTION NO. 16

USE TYPICAL SECTION NO.16

-L- STA. 191+82.00 RT.
-L- STA. 199+48.00 LT.

PAVEMENT SCHEDULE

C1	3″ S9.5B
C2	VAR. S9.5B
D1	4″ I19.0B
D2	VAR. I19.0B
E1	4″ B25.0B
E2	VAR. B25.0B
P	PRIME COAT
J1	10″ ABC
L2	CL IV SUBGRADE STAB.
N2	GEOTEXT. FOR SOIL STAB.
R1	2′-6″ C&G
R2	2′-9″ C&G
R3	1′-6″ C&G
R4	5″ CONC. ISLND.
S	4″ CONC. SW
T	EARTH MATERIAL
U	EXISTING PAVEMENT
W1	WEDGING DETAIL 1
W2	WEDGING DETAIL 2

P:\2011\U-3615B_Rodney\Proj\u3615b_rdy_typ.dgn
1:59:20 PM
07/29/2014