DocuSign Envelope ID: 286A5B5C-3B5E-4134-B042-8C6A9D23E8A0

5/14/99

PROJECT REFERENCE NO.	SHEET NO.
U-3615B	2C-10

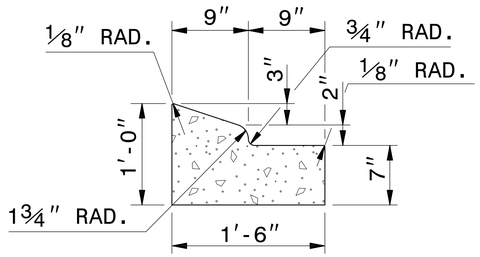

1'-6" CURB AND GUTTER

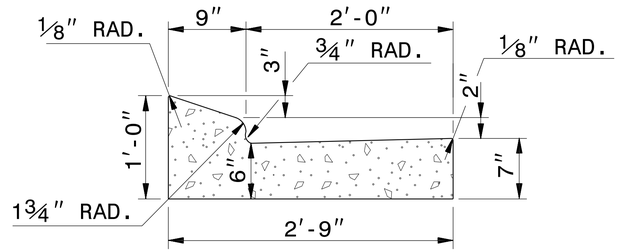

2'-9" CURB AND GUTTER

NOTE: SEE STD. DWG. 846.01 FOR ADDITIONAL CURB AND GUTTER INFORMATION.

SEE ROADWAY PLANS FOR LOCATION OF CURB TRANSITION.

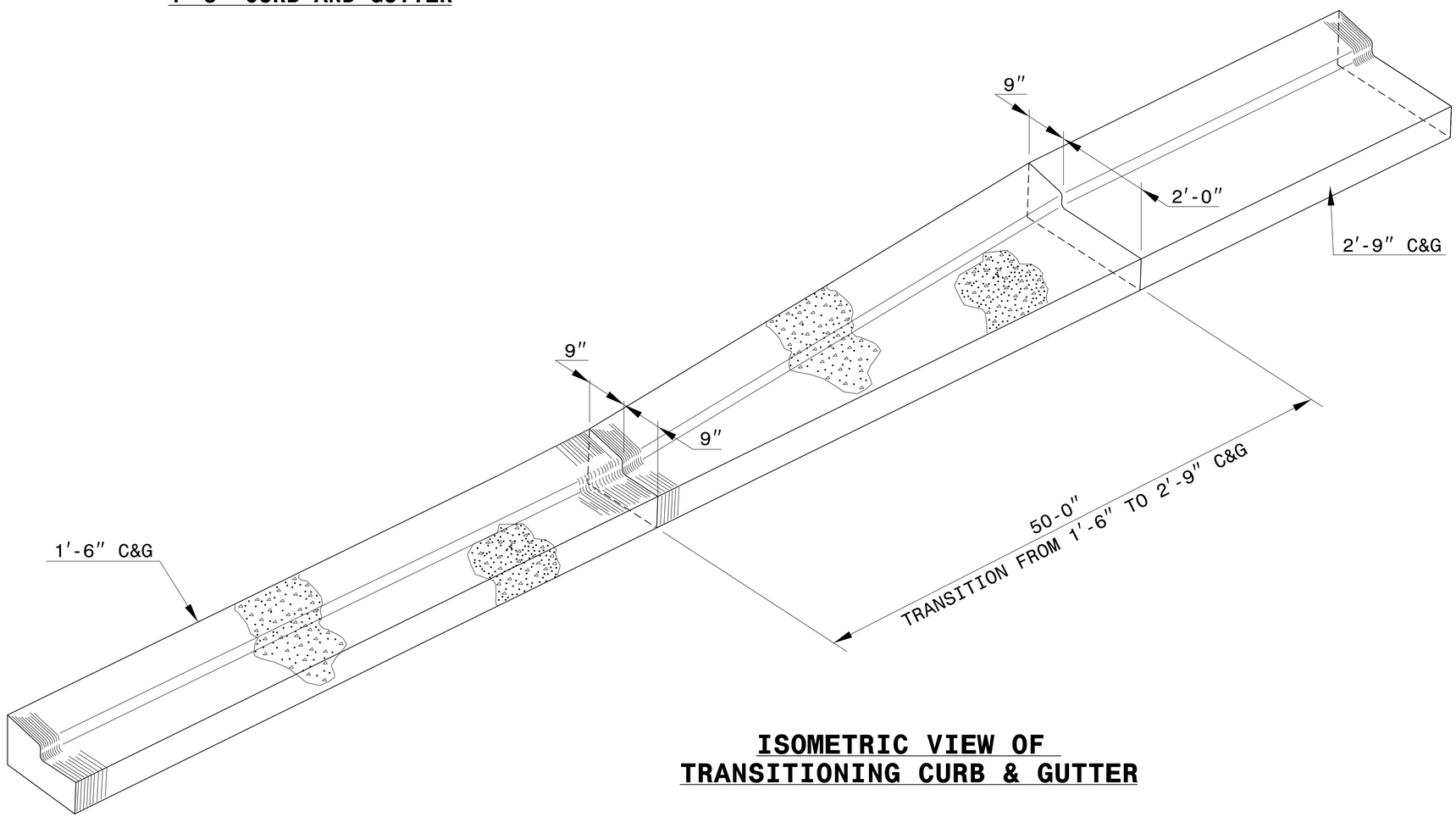

ISOMETRIC VIEW OF TRANSITIONING CURB & GUTTER

CONTRACT STANDARDS
AND DEVELOPMENT UNIT
Office 919-707-6950 FAX 919-250-4119

DETAIL OF 1'-6" TO 2'-9" CURB & GUTTER TRANSITION SECTION

ORIGINAL BY: T.S.SPELL DATE: NOV. 26, 2001
MODIFIED BY: T.S.SPELL DATE: JAN. 23, 2007
CHECKED BY: DATE:
FILE SPEC.: DS174:/usr/details/stand/cgtransit.dgn