DocuSign Envelope ID: BD04A6F0-193C-4758-B1A2-A87F8B7C208F

5/14/99

PROJECT REFERENCE NO.	SHEET NO.
U-3615B	2A-4
R/W SHEET NO.	
ROADWAY DESIGN ENGINEER	PAVEMENT DESIGN ENGINEER

WETHERILL ENGINEERING
559 Jones Franklin Rd. Suite 164
Raleigh, N.C. 27606
Liscense No. F-0377
Bus: 919 851 8077
Fax: 919 851 8107
TRANSPORTATION PLANNING/DESIGN - BRIDGE/STRUCTURE DESIGN
CIVIL/SITE DESIGN - GIS/GPS - CONSTRUCTION OBSERVATION

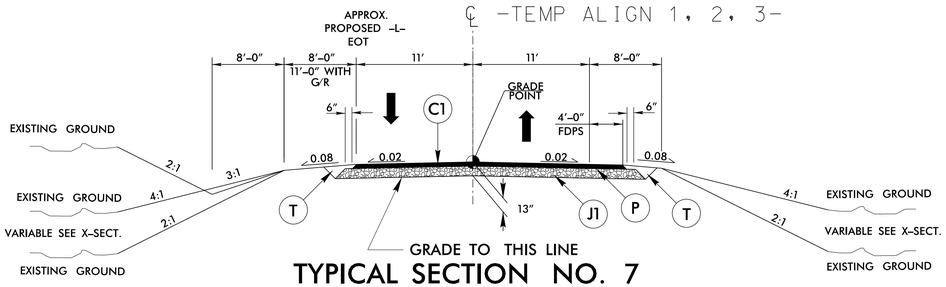

TYPICAL SECTION NO. 7

USE TYPICAL SECTION NO.7

-TEMP ALIGNMENT 1- STA. 10+00.00 TO STA. 18+23.31
-TEMP ALIGNMENT 2- STA. 10+00.00 TO STA. 14+74.88
-TEMP ALIGNMENT 3- STA. 10+50.00 TO STA. 19+85.54

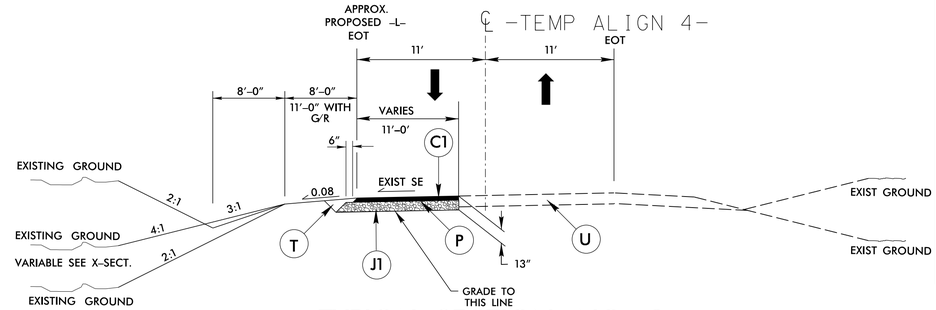

TYPICAL SECTION NO. 8

USE TYPICAL SECTION NO.8

-TEMP ALIGNMENT 4- STA. 11+00.00 TO STA. 52+31.19

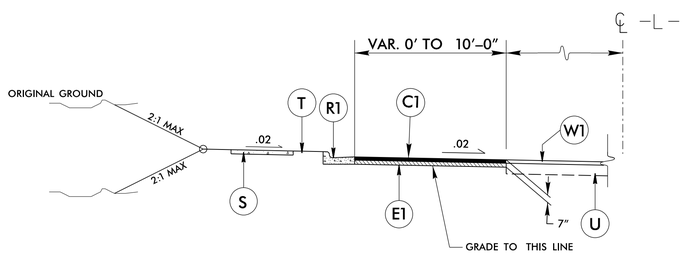

PARTIAL TYPICAL /INSET

FOR NARROW WIDENING LOCATIONS
USE IN CONJUNCTION WITH TYPICAL SECTIONS NO. 7 & 8

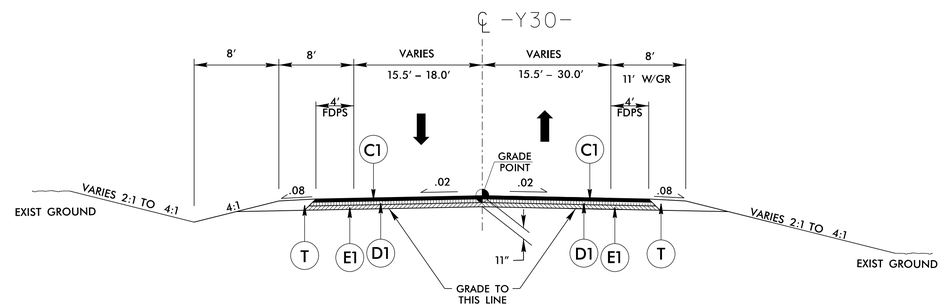

TYPICAL SECTION NO. 9

USE TYPICAL SECTION NO.9

-Y30- STA. 15+00.00 TO STA. 19+57.21

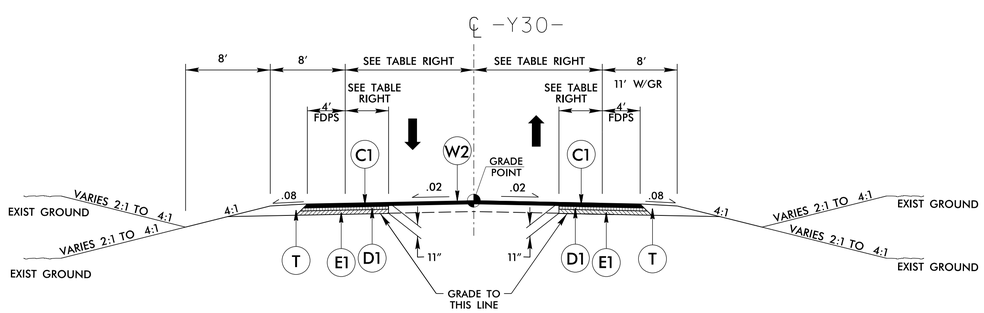

TYPICAL SECTION NO. 10

USE TYPICAL SECTION NO.10

-Y30- STA. 13+00.00 TO STA. 15+00.00
-Y30- STA. 20+21.62 TO STA. 21+80.37

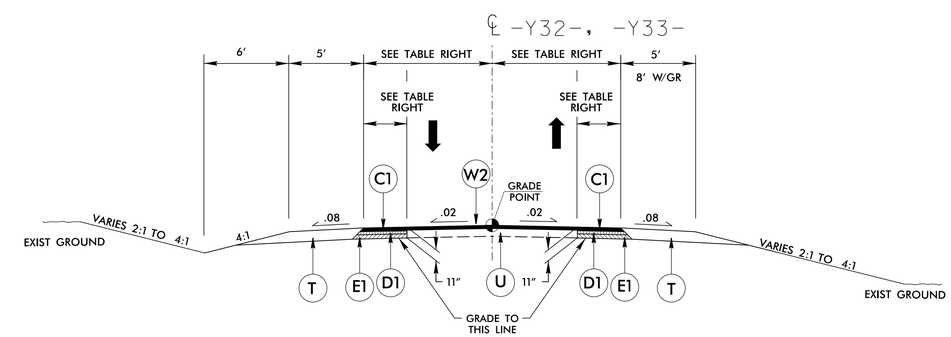

TYPICAL SECTION NO. 11

USE TYPICAL SECTION NO.11

-Y32- STA. 10+55.00 TO STA. 12+51.68
-Y33- STA. 12+20.71 TO STA. 13+69.51

T.S. NO.	LINE	EXISTING WIDTH LT.	EXISTING WIDTH RT.	PROPOSED WIDENING LT.	PROPOSED WIDENING RT.
10	-Y30-	12'-30'	12'-30'	0'-2.67'	0'-3.45'
11	-Y32-	11.5'-15'	11.5'-15'	0'-2.85'	0'-3.4'
11	-Y33-	9.6'-15'	9.9'-15'	0'-3.23'	0'-3.23'

PAVEMENT SCHEDULE

C1	3" S9.5B
C2	VAR. S9.5B
D1	4" I19.0B
D2	VAR. I19.0B
E1	4" B25.0B
E2	VAR. B25.0B
P	PRIME COAT
J1	10" ABC
L2	CL IV SUBGRADE STAB.
N2	GEOTEXT. FOR SOIL STAB.
R1	2'-6" C&G
R2	2'-9" C&G
R3	1'-6" C&G
R4	5" CONC. ISLND.
S	4" CONC. SW
T	EARTH MATERIAL
U	EXISTING PAVEMENT
W1	WEDGING DETAIL 1
W2	WEDGING DETAIL 2

P:\2011\U-3615B\Roadway\Proj\u3615b_rdy_typ.dgn
10/29/2014 8:17:45 PM