DocuSign Envelope ID: 286A5B5C-3B5E-4134-B042-8C6A9D23E8A0

PROJ. REFERENCE NO.	SHEET NO.
U-3615B	2C-11

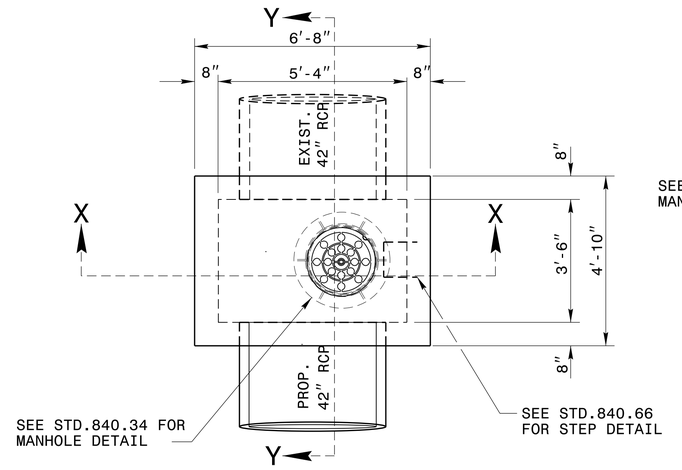

PLAN VIEW

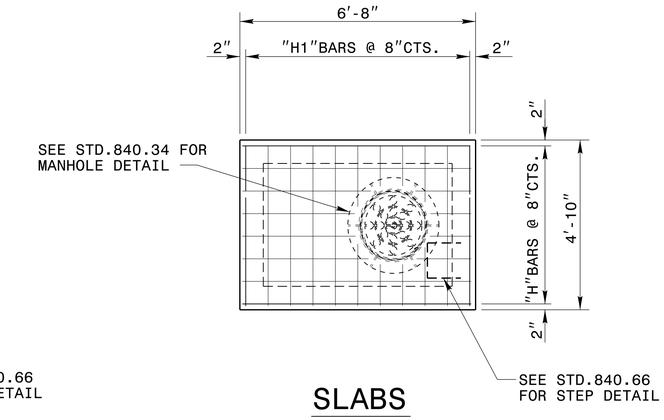

SLABS

GENERAL NOTES:

-THE BASE SLAB TO BE CONSTRUCTED BY FORMING.

-SEE STD. DWG. 840.00 FOR CONSTRUCTION OF BASE SLAB

-CLASS 'B' CONCRETE TO BE USED THROUGHOUT.

-CONSTRUCTION OPTIONS: MONOLITHIC POUR; 2" KEYWAY OR #4 BAR DOWELS AT 12" CENTERS AS DIRECTED BY THE ENGINEER.

-REINFORCING STEEL TO BE CUT, BENT OR RELOCATED TO POSITION PIPE AS DIRECTED BY THE ENGINEER.

-ALL EXPOSED CORNERS TO BE CHAMFERED 1".

-SEE STD. DRAWING 840.34 FOR CONSTRUCTION OF RISER AND MANHOLE.

-JUNCTION BOXES OVER 3'-6" IN DEPTH WITH MANHOLES WILL REQUIRE STEPS TO BE PLACED ON 12" CTRS. REFERENCE STD. NO. 840.66.

-MAINTAIN 2" MINIMUM CONCRETE COVERAGE ON ALL STEEL.

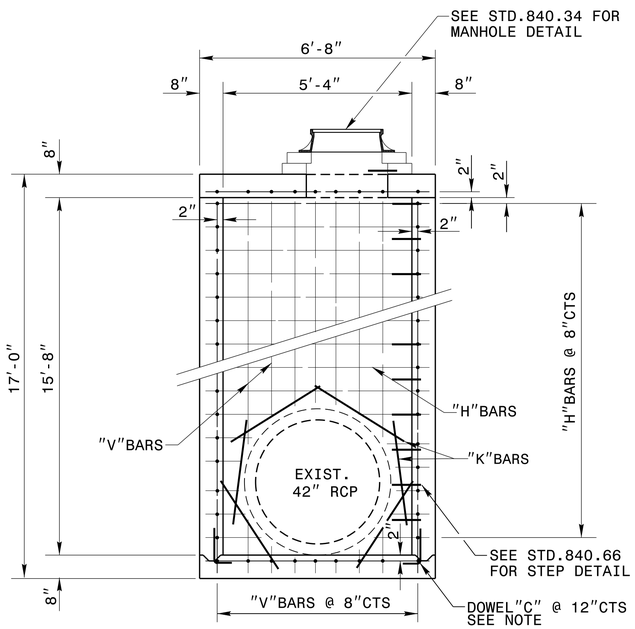

SECTION X-X

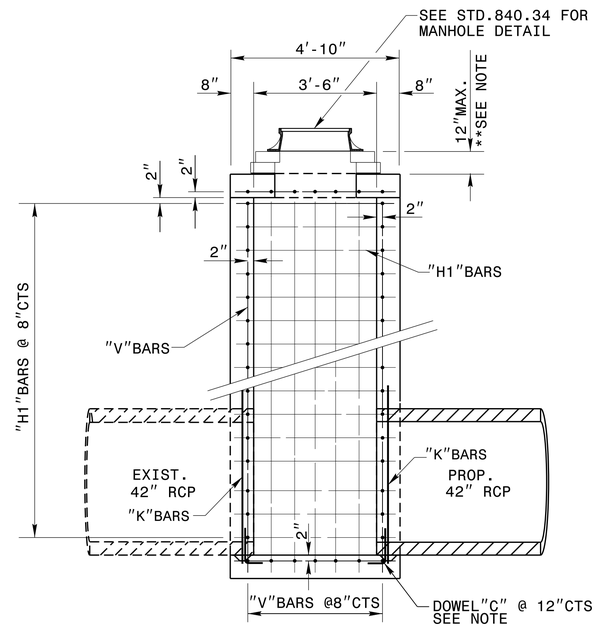

SECTION Y-Y

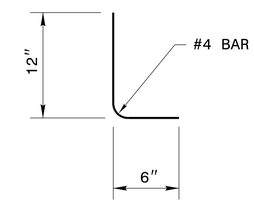

DOWEL "C"

BILL OF MATERIAL

CODE	BAR#	LENGTH	LBS/FT.	QTY.	LBS
H	4	6'-4"	0.668	60	254
H1	4	4'-6"	0.668	64	193
V	4	16'-0"	0.668	28	300
K	4	3'-0"	0.668	16	33
TOTAL WEIGHT STEEL					780
MASONARY QUANTITIES					
CLASS "B" CONCRETE					9.5 CU.YDS.

** 0.30 CU.YD. PER FOOT OF RISER HEIGHT.

NORTH CAROLINA PROFESSIONAL SEAL 022966 ENGINEER Joel S. Howerton

CONTRACT STANDARDS & DEVELOPMENT UNIT
STANDARDS AND SPECIAL DESIGN
Office 919-707-6900 FAX 919-250-4119

SPECIAL JUNCTION BOX DETAIL

ORIGINAL BY: rnbritt DATE: 07-26-11
MODIFIED BY: rnbritt DATE: 08-02-13
CHECKED BY: DATE:
FILE SPEC.: details/nbritt/english/rural/u-2925 extra depth str.dgn