DocuSign Envelope ID: BD04A6F0-193C-4758-B1A2-A87F8B7C208F

5/14/99

PROJECT REFERENCE NO.	SHEET NO.
U-3615B	2A-2
R/W SHEET NO.	
ROADWAY DESIGN ENGINEER	PAVEMENT DESIGN ENGINEER

WETHERILL ENGINEERING
559 Jones Franklin Rd. Suite 164
Raleigh, N.C. 27606
Liscense No. F-0377
Bus: 919 851 8077
Fax: 919 851 8107
TRANSPORTATION PLANNING/DESIGN - BRIDGE/STRUCTURE DESIGN
CIVIL/SITE DESIGN - GIS/GPS - CONSTRUCTION OBSERVATION

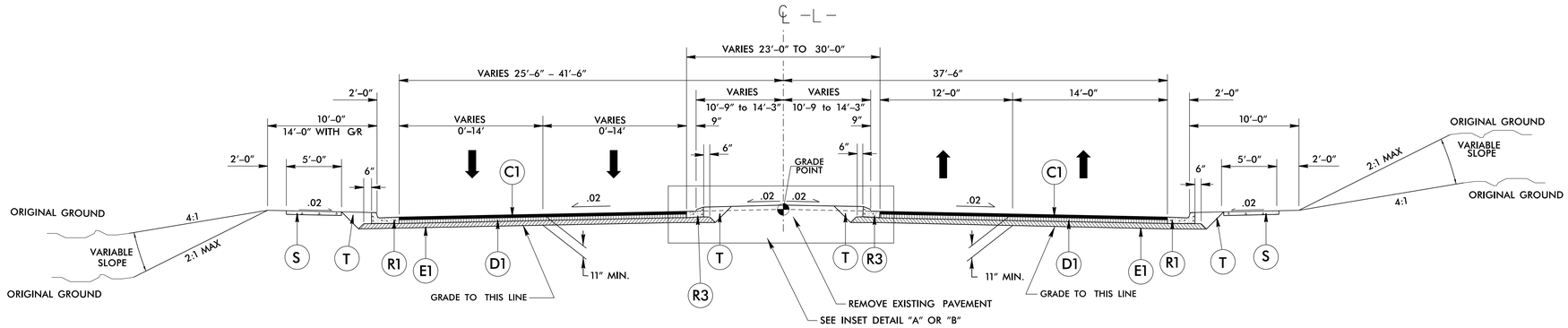

TYPICAL SECTION NO. 3

USE TYPICAL SECTION NO. 3

-L- STA. 201+30.40 TO STA.233+63.99 (BEGIN BRIDGE LT.)
-L- STA. 201+30.40 TO STA.233+23.87(BEGIN BRIDGE RT.)
-L- STA. 234+82.19 (END BRIDGE LT.) TO STA.237+28.00 (BEGIN BRIDGE)
-L- STA. 234+33.61 (END BRIDGE RT.) TO STA.237+28.00 (BEGIN BRIDGE)
-L- STA. 239+38.00 (END BRIDGE) TO STA.340+90.18

TRANSITION FROM TYPICAL SECTION NO. 3
TO TYPICAL SECTION NO. 6

-L- STA. 340+90.18 TO STA. 342+90.18

INSET A

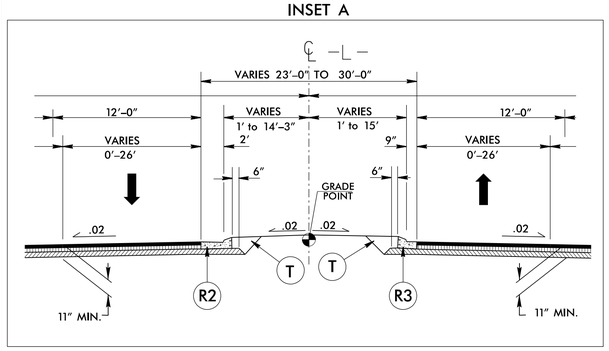

USE INSET A WITH TYPICAL NO. 3 AS FOLLOWS:

-L- RT. MED. STA. 207+21.41 TO STA. 212+49.66
-L- LT. MED. STA. 212+29.66 TO STA. 212+49.66
-L- LT. MED. STA. 213+75.49 TO STA. 213+95.49
-L- RT. MED. STA. 213+75.49 TO STA. 217+12.26
-L- LT. MED. STA. 218+87.30 TO STA. 227+66.66
-L- RT. MED. STA. 229+35.99 TO STA. 233+23.87 (BEGIN BRIDGE RT.)
-L- RT. MED. STA. 234+33.61 (END BRIDGE RT.) TO STA. 235+93.50
-L- LT. MED. STA. 242+72.05 TO STA. 242+92.05
-L- RT. MED. STA. 242+72.05 TO STA. 244+87.10
-L- LT. MED. STA. 247+06.56 TO STA. 249+61.63
-L- LT. MED. STA. 254+53.92 TO STA. 258+47.02
-L- RT. MED. STA. 265+00.96 TO STA. 277+68.65
-L- LT. MED. STA. 305+50.57 TO STA. 315+32.74

INSET B

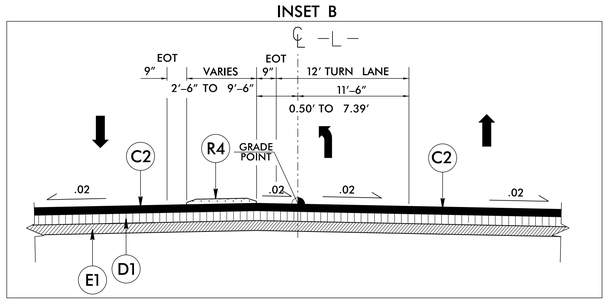

USE INSET B WITH TYPICAL 3 AS FOLLOWS:

-L- STA. 236+93.32 TO STA. 237+28.00 (BEGIN BRIDGE) (REVERSE)
-L- STA. 239+38.00 (END BRIDGE) TO STA. 241+61.84
-L- STA. 261+73.08 TO STA. 262+23.08
-L- STA. 264+00.96 TO STA. 265+00.96 (REVERSE)
-L- STA. 288+05.26 TO STA. 289+05.26
-L- STA. 290+13.41 TO STA. 291+13.41 (REVERSE)
-L- STA. 302+64.89 TO STA. 303+64.89
-L- STA. 304+50.57 TO STA. 305+50.57 (REVERSE)
-L- STA. 316+69.06 TO STA. 317+69.06
-L- STA. 318+69.93 TO STA. 319+69.93 (REVERSE)
-L- STA. 335+45.11 TO STA. 336+45.11

DETAIL FOR SUBGRADE STABILITY

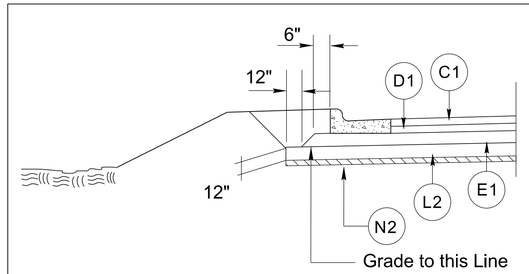

USE IN CONJUNCTION WITH TYPICAL SECTION NO. 3

-L- STA. 254+75.00 TO 257+70.00
-L- STA. 288+75.00 TO 301+25.00
-L- STA. 318+25.00 TO 325+70.00

USE IN CONJUNCTION WITH TYPICAL SECTION NO. 12

-Y43N- STA. 11+80.00 TO 12+70.00
-Y43S- STA. 10+38.00 TO 11+20.00

USE IN CONJUNCTION WITH TYPICAL SECTION NO. 13

-Y45N- STA. 12+45.00 TO 12+98.00
-Y45S- STA. 10+26.00 TO 10+55.00

PAVEMENT SCHEDULE

C1	3" S9.5B
C2	VAR. S9.5B
D1	4" I19.0B
D2	VAR. I19.0B
E1	4" B25.0B
E2	VAR. B25.0B
P	PRIME COAT
J1	10" ABC
L2	CL IV SUBGRADE STAB.
N2	GEOTEXT. FOR SOIL STAB.
R1	2'-6" C&G
R2	2'-9" C&G
R3	1'-6" C&G
R4	5" CONC. ISLND.
S	4" CONC. SW
T	EARTH MATERIAL
U	EXISTING PAVEMENT
W1	WEDGING DETAIL 1
W2	WEDGING DETAIL 2

P:\2011\U-3615B\Roadway\Proj\u3615b_rdy_typ.dgn
10/25/2014 1:37:41 PM