$$$$$$SYSTIME$$$$$
$$$$$$$$$$$$$$$$DGN$$$$$$$$$$$$$$$
$$$$USERNAME$$$$

DocuSign Envelope ID: 28A5B5C-383E-4134-8D42-86CA9D23E9A0

STATE OF NORTH CAROLINA
DEPT. OF TRANSPORTATION
DIVISION OF HIGHWAYS
RALEIGH, N.C.

ENGLISH DETAIL DRAWING FOR
STRUCTURE ANCHOR UNITS
GUARDRAIL ANCHOR UNIT, TYPE III FOR ATTACHMENT TO
RAIL ON BRIDGE - SUB REGIONAL TIER

SHEET 2 OF 7
862d03

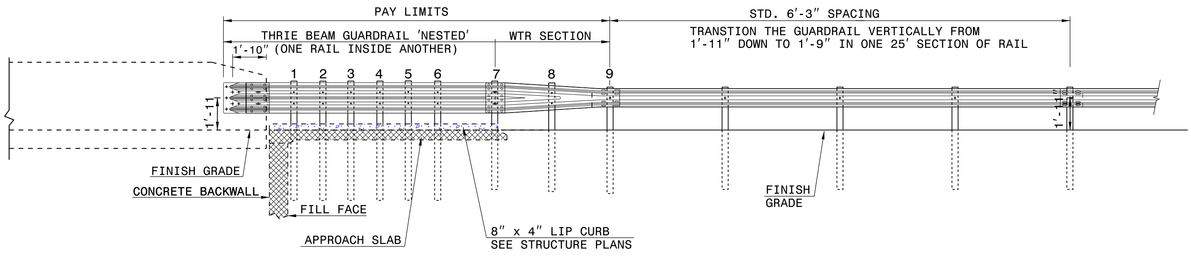

ELEVATION

NOTE:
**POST NOT REQUIRED FOR SKEW ANGLES GREATER THAN 150° OR LESS THAN 30° UNLESS OTHERWISE DIRECTED BY THE ENGINEER.
*THE DISTANCE FROM END OF BRIDGE RAIL TO CENTER LINE OF THE FIRST POST SHOULD BE 11½" IF CONCRETE BACKWALL IS NOT PRESENT.
-SHOULDER BERM GUTTER MUST BE INSTALLED TO THE LIMITS 8" x 4" LIP CURB IS SHOWN IF ANCHOR UNIT IS NOT ADJACENT TO AN APPROACH SLAB.
-MEASURE GUARDRAIL HEIGHT FROM THE TOP OF ADJACENT SURFACE (SHOULDER, BERM, OR GUTTER).
-LAP JOINTS IN THE DIRECTION OF TRAFFIC FLOW.
-SEE SHEET 5 FOR POST SECTIONS 1 THRU 9.

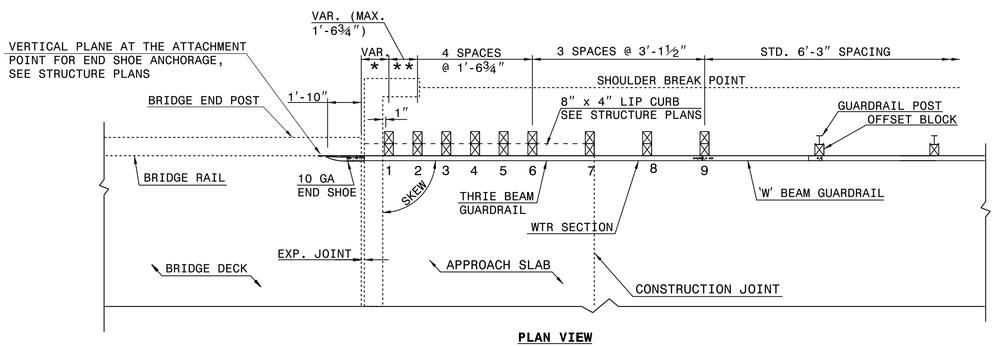

PLAN VIEW

GUARDRAIL ANCHOR UNIT, TYPE III FOR ATTACHMENT TO RAIL ON BRIDGE - SUB REGIONAL TIER

STATE OF NORTH CAROLINA
DEPT. OF TRANSPORTATION
DIVISION OF HIGHWAYS
RALEIGH, N.C.

ENGLISH DETAIL DRAWING FOR
STRUCTURE ANCHOR UNITS
GUARDRAIL ANCHOR UNIT, TYPE III FOR ATTACHMENT TO
RAIL ON BRIDGE - SUB REGIONAL TIER

SHEET 2 OF 7
862d03

STATE OF NORTH CAROLINA
DEPT. OF TRANSPORTATION
DIVISION OF HIGHWAYS
RALEIGH, N.C.

ENGLISH DETAIL DRAWING FOR
STRUCTURE ANCHOR UNITS
GUARDRAIL ANCHOR UNIT, TYPE III

SHEET 3 OF 7
862d03

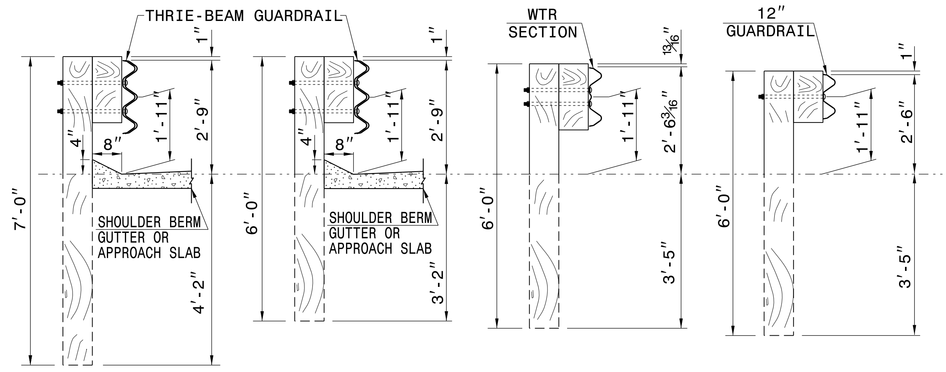

SECTION OF THRIE BEAM POSTS 1 THRU 6

SECTION OF THRIE BEAM POST 7

SECTION OF WTR BEAM POST 8

SECTION OF 'W' BEAM POST 9

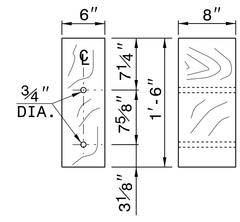

THRIE BEAM OFFSET BLOCK

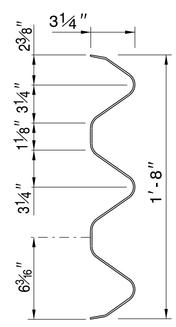

THRIE-BEAM SECTION

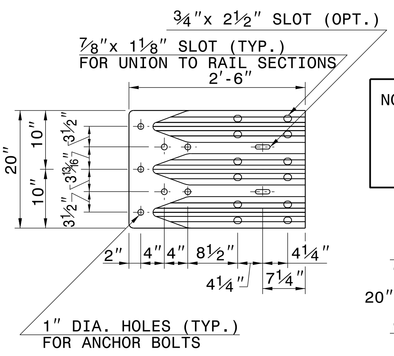

END SHOE

NOTE: THE MID POST AND OFFSET BLOCK OF THE WTR SECTION WILL REQUIRE SPECIAL BOLT HOLE DRILLING IN THE THRIE BEAM OFFSET BLOCK AND LINE POST.

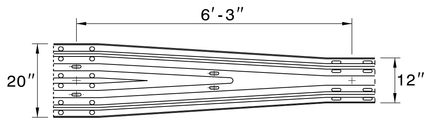

WTR SECTION
ELEVATION VIEW

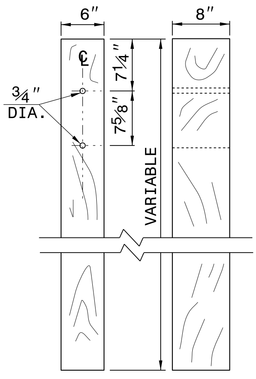

THRIE BEAM LINE POST

STATE OF NORTH CAROLINA
DEPT. OF TRANSPORTATION
DIVISION OF HIGHWAYS
RALEIGH, N.C.

ENGLISH DETAIL DRAWING FOR
STRUCTURE ANCHOR UNITS
GUARDRAIL ANCHOR UNIT, TYPE III

SHEET 3 OF 7
862d03

CONTRACT STANDARDS AND DEVELOPMENT UNIT
Office 919-707-6950 FAX 919-250-4119

SEE TITLE BLOCK

ORIGINAL BY: J. HOWERTON DATE: 06-22-12
MODIFIED BY: DATE:
CHECKED BY: DATE:
FILE SPEC.:

PROJECT REFERENCE NO.: U-3615B
SHEET NO.: 2C-6