DocuSign Envelope ID: 5F4DBB3C-B094-4E6F-996B-BB590C1C3F5C

12/15/05

PROJECT REFERENCE NO.	SHEET NO.
U-3615B	2D-3

HYDRAULICS ENGINEER

NORTH CAROLINA PROFESSIONAL ENGINEER SEAL 012575 Paul Fisher ENGINEER Paul F. Fisher

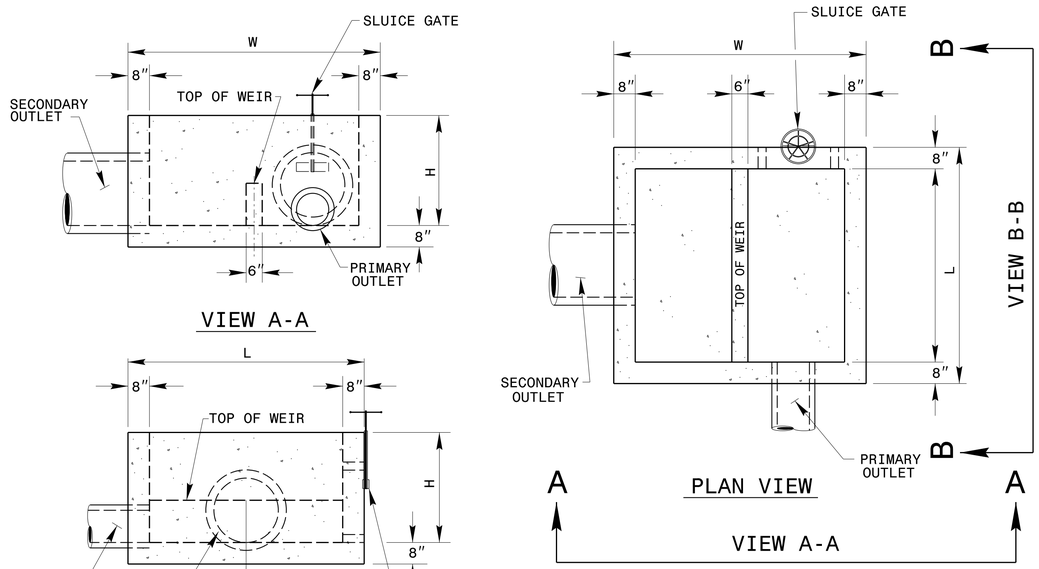

BOX "A"

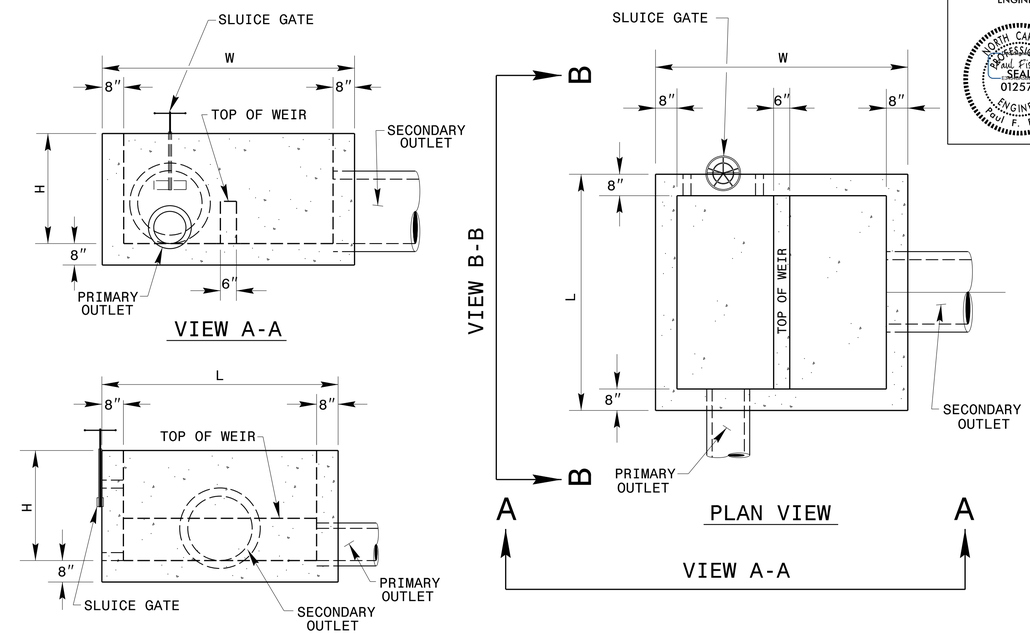

BOX "B"

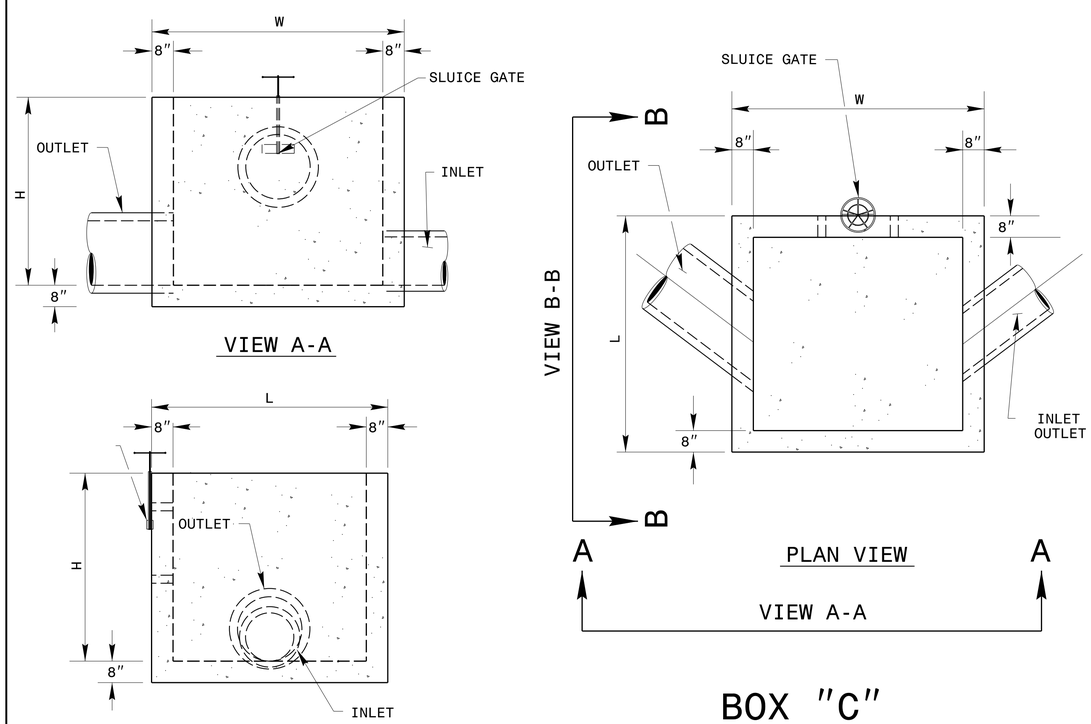

BOX "C"

DIMENSIONS

BASIN NO.	PROJECT STATION	BOX DETAIL	PRIMARY OUTLET	SECONDARY OUTLET	INLET DIAMETER	SLUICE GATE DIAMETER	WEIR WIDTH	WEIR HEIGHT	WEIR LENGTH	H	W	L
2	202+00 (LT)	B	12″	24″	24″	32″	0.5′	1.5′	6.0′ min.	3.5′	8.0′	7.5′
3	222+00 (LT)	B	12″	30″	24″	32″	0.5′	1.5′	6.0′ min.	3.5′	8.0′	7.5′
5	242+00 (RT)	A	12″	18″	24″	32″	0.5′	1.7′	6.0′ min.	3.0′	7.5′	7.5′
6	267+00 (LT)	B	12″	24″	24″	32″	0.5′	1.5′	6.0′ min.	3.5′	8.0′	7.5′
7	272+00 (RT)	B	15″	24″	30″	38¾″	0.5′	1.4′	6.0′ min.	3.5′	9.0′	7.5′
11	232+50 (RT)	C	24″	-	18″	25″	N/A	N/A	N/A	4.9′	7.5′	7.5′

NOTE: HEIGHT OF BOX LISTED IS INSIDE DIMENSION. LENGTH AND WIDTH ARE OUTSIDE DIMENSIONS.
BASE ELEVATION OF SPLITTER BOX EQUALS BOTTOM ELEVATION OF HAZARDOUS SPILL RETENTION BASIN (SEE DETAIL 2D-2).

11/17/2014
6:04:28 AM
P:\2011\U-3615B\Roadway\Proj\final details pf sh.dgn