DocuSign Envelope ID: 286A5B5C-3B5E-4134-B042-8C6A9D23E8A0

PROJECT REFERENCE NO.	SHEET NO.
U-3615B	2C-3

STATE OF
NORTH CAROLINA
DEPT. OF TRANSPORTATION
DIVISION OF HIGHWAYS
RALEIGH, N.C.

ENGLISH DETAIL DRAWING FOR
REINFORCED CONCRETE ENDWALL
FOR DOUBLE 66" PIPE - 90° SKEW

SHEET OF
838D34

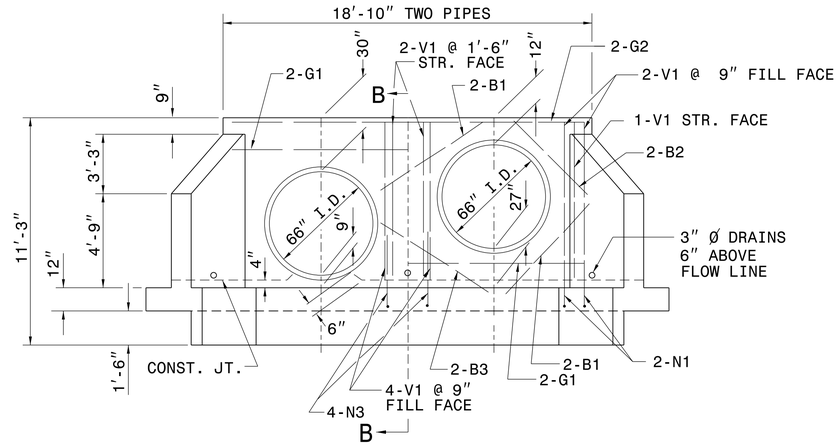

ELEVATION

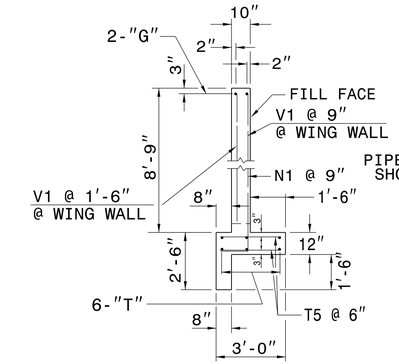

SECTION - BB

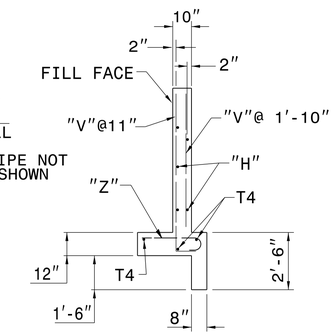

SECTION - AA

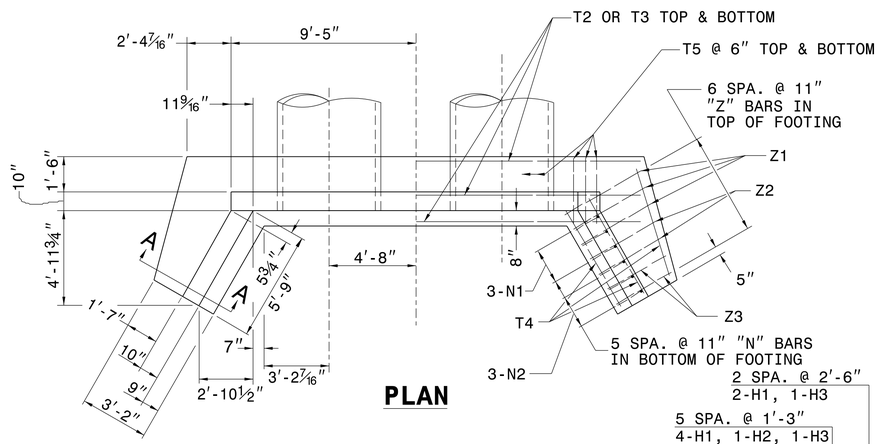

PLAN

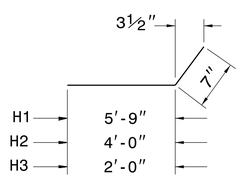

"H" BARS

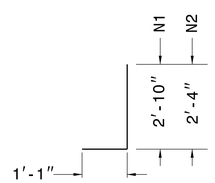

"N" BARS

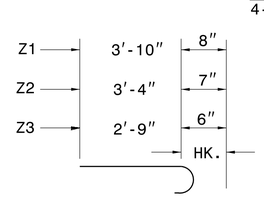

"Z" BARS

"H", "N", & "Z" BAR DIMENSIONS ARE OUT TO OUT.

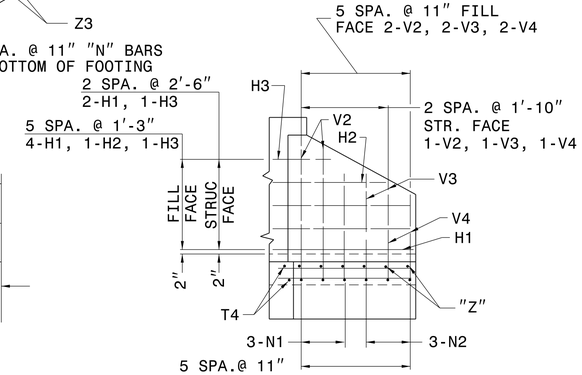

WING ELEVATION

SEE STD. # 838.45 FOR GENERAL NOTES.

BILL OF MATERIAL FOR ENDWALL

REINF. STEEL			2 PIPES			
BAR	SIZE	LENGTH	NO.	WEIGHT		
B1	#4	5'-6"	8	29		
B2	#4	4'-6"	4	12		
B3	#4	7'-0"	4	19		
G1	#7	8'-3"	4	76		
G2	#7	18'-6"	2	76		
H1	#4	6'-4"	11	47		
H2	#4	4'-7"	2	6		
H3	#4	2'-7"	4	7		
N1	#5	3'-11"	14	57		
N2	#4	3'-5"	6	14		
T2	#4	23'-0"	6	92		
T4	#4	6'-0"	6	24		
T5	#4	2'-6"	76	127		
V1	#4	8'-3"	12	66		
V2	#4	6'-8"	6	27		
V3	#4	5'-7"	6	22		
V4	#4	4'-5"	6	18		
Z1	#6	4'-6"	6	41		
Z2	#6	3'-11"	4	16		
Z3	#4	3'-3"	4	9		
REINF. STEEL LBS.				781		
CON./R.C. CU. YDS				10.1		

STATE OF
NORTH CAROLINA
DEPT. OF TRANSPORTATION
DIVISION OF HIGHWAYS
RALEIGH, N.C.

ENGLISH DETAIL DRAWING FOR
REINFORCED CONCRETE ENDWALL
FOR DOUBLE 66" PIPE - 90° SKEW

SHEET OF
838D34

NORTH CAROLINA PROFESSIONAL SEAL 022966 ENGINEER Joel S. Howerton

CONTRACTS STANDARDS AND DEVELOPMENT UNIT
Office 919-707-6950 FAX 919-250-4119

SEE PLATE FOR TITLE

ORIGINAL BY: _____ DATE: _____
MODIFIED BY: K.KEMPF DATE: 1/16/2013
CHECKED BY: _____ DATE: _____
FILE SPEC.: Details/kkempf/english/U3615B_2x66EW_2x54EW

$$$$SYTME$$$$ $$$$CONS$$$$
$$$$USERNAME$$$$