DocuSign Envelope ID: C57D6F1D-D4B3-4EC4-9FE7-1D54FD1EBE81

5/14/99

PROJECT REFERENCE NO.	SHEET NO.
U-3615B	2A-3
R/W SHEET NO.	
ROADWAY DESIGN ENGINEER	PAVEMENT DESIGN ENGINEER

NORTH CAROLINA PROFESSIONAL SEAL 022999 ENGINEER GREG S. PURVIS

NORTH CAROLINA PROFESSIONAL SEAL 022896 ENGINEER MARK MORRISON

WETHERILL ENGINEERING
559 Jones Franklin Rd. Suite 164
Raleigh, N.C. 27606
Liscense No. F-0377
Bus: 919 851 8077
Fax: 919 851 8107

TRANSPORTATION PLANNING/DESIGN - BRIDGE/STRUCTURE DESIGN
CIVIL/SITE DESIGN - GIS/GPS - CONSTRUCTION OBSERVATION

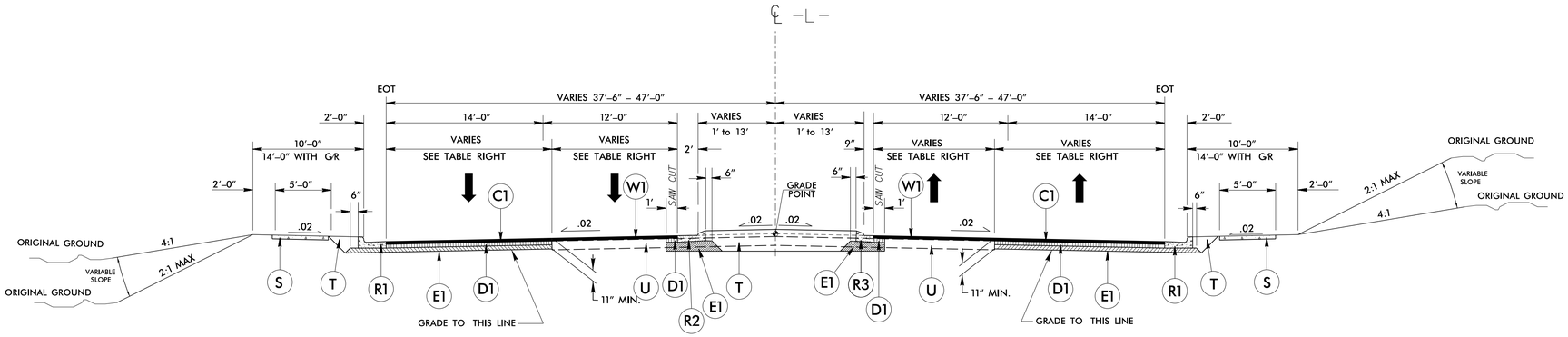

TYPICAL SECTION NO. 4

USE TYPICAL SECTION NO. 4

WIDEN AND RESURFACE AS FOLLOWS:

-L- STA. 252+50.00 +/- TO STA. 256+50.00 +/-
-L- STA. 260+50.00 +/- TO STA. 262+50.00 +/-
-L- STA. 272+50.00 +/- TO STA. 276+00.00 +/-
-L- STA. 276+50.00 +/- TO STA. 281+00.00 +/-
-L- STA. 284+50.00 +/- TO STA. 295+43.41 +/-
-L- STA. 320+00.00 +/- TO STA. 326+00.00 +/-
-L- STA. 339+00.00 +/- TO STA. 348+41.04 +/-

T.S. NO.	LINE	EXISTING WIDTH LT.	EXISTING WIDTH RT.	PROPOSED WIDENING LT.	PROPOSED WIDENING RT.
4	-L-	0'-20.70'	0'-30.50'	0'-26.00'	0'-26.00'

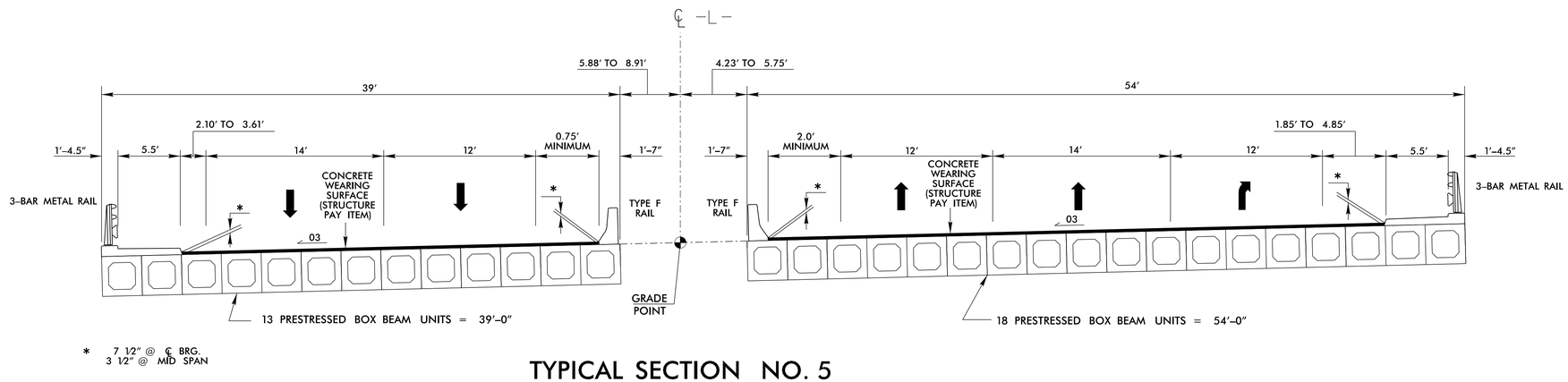

TYPICAL SECTION NO. 5

USE TYPICAL SECTION NO. 5

-L- STA. 233+23.87(BEGIN BRIDGE)TO STA.234+33.61 (END BRIDGE) RIGHT
-L- STA. 233+63.99 (BEGIN BRIDGE) TO STA.234+82.19 (END BRIDGE) LEFT

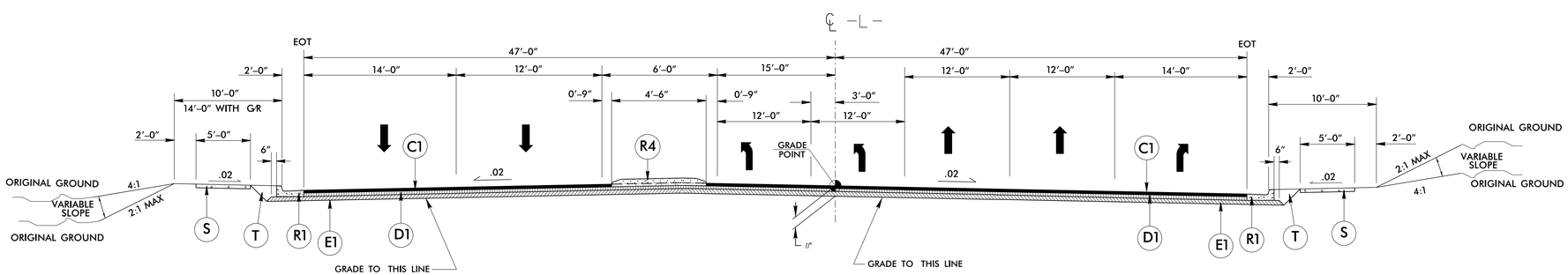

TYPICAL SECTION NO. 6

USE TYPICAL SECTION NO. 6

-L- STA. 342+90.18 TO STA. 348+41.04

PAVEMENT SCHEDULE

C1	3" S9.5B
C2	VAR. S9.5B
D1	4" I19.0B
D2	VAR. I19.0B
E1	4" B25.0B
E2	VAR. B25.0B
P	PRIME COAT
J1	10" ABC
L2	CL IV SUBGRADE STAB.
N2	GEOTEXT. FOR SOIL STAB.
R1	2'-6" C&G
R2	2'-9" C&G
R3	1'-6" C&G
R4	5" CONC. ISLND.
S	4" CONC. SW
T	EARTH MATERIAL
U	EXISTING PAVEMENT
W1	WEDGING DETAIL 1
W2	WEDGING DETAIL 2

11/12/2014 10:33:50 AM
3615B\Roadway\Proj\3615b_rdy_typ.dgn