DocuSign Envelope ID: 286A5B5C-3B5E-4134-B042-8C6A9D23E8A0

PROJECT REFERENCE NO.	SHEET NO.
U-3615B	2C-2

STATE OF
NORTH CAROLINA
DEPT. OF TRANSPORTATION
DIVISION OF HIGHWAYS
RALEIGH, N.C.

ENGLISH DETAIL DRAWING FOR
REINFORCED CONCRETE ENDWALL
FOR DOUBLE 54" PIPE - 90° SKEW

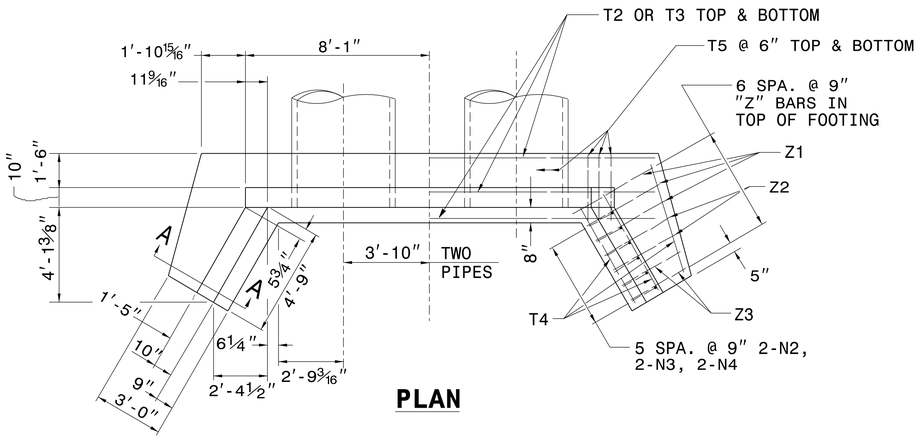

PLAN

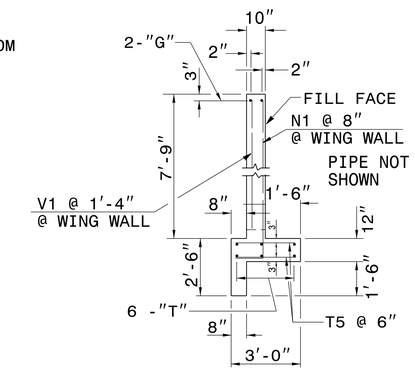

SECTION - BB

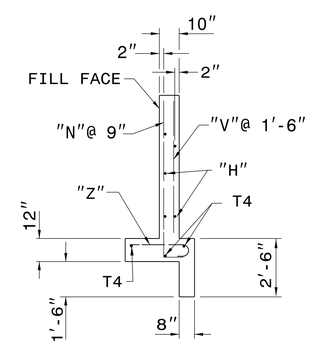

SECTION - AA

SEE STD. # 838.45 FOR GENERAL NOTES.

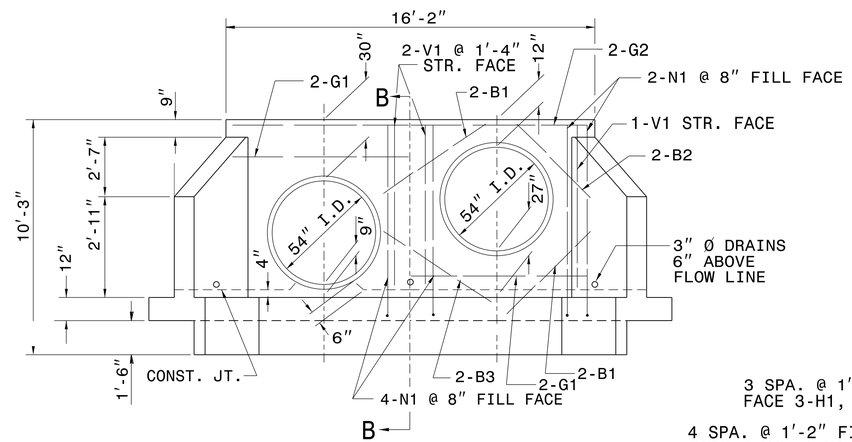

ELEVATION

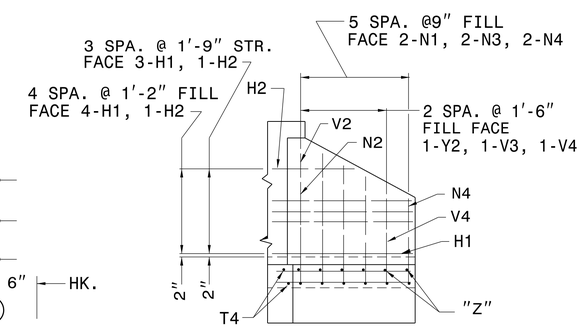

WING ELEVATION

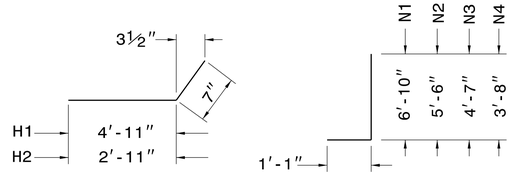

"H" BARS

"N" BARS

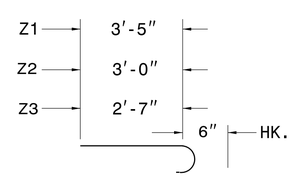

"Z" BARS

"H", "N", & "Z" BAR DIMENSIONS ARE OUT TO OUT.

BILL OF MATERIAL FOR ENDWALL

REINF. STEEL			2 PIPES			
BAR	SIZE	LENGTH	NO.	WEIGHT	NO.	WEIGHT
B1	#4	5'-6"	8	29		
B2	#4	4'-6"	4	12		
B3	#4	6'-0"	4	16		
G1	#7	7'-11"	4	65		
G2	#7	15'-10"	2	65		
H1	#4	5'-6"	12	44		
H2	#4	3'-6"	4	9		
N1	#4	7'-11"	8	42		
N2	#4	6'-7"	4	18		
N3	#4	5'-8"	4	15		
N4	#4	4'-9"	4	13		
T2	#4	19'-6"	6	78		
T4	#4	5'-3"	6	21		
T5	#4	2'-6"	64	107		
V1	#4	7'-3"	12	58		
V2	#4	6'-4"	6	26		
V3	#4	5'-5"	6	22		
V4	#4	4'-7"	6	18		
Z1	#4	3'-11"	6	16		
Z2	#4	3'-6"	4	9		
Z3	#4	3'-1"	4	8		
REINF. STEEL LBS.				691		
CON./R.C. CU. YDS			8.1			

STATE OF
NORTH CAROLINA
DEPT. OF TRANSPORTATION
DIVISION OF HIGHWAYS
RALEIGH, N.C.

ENGLISH DETAIL DRAWING FOR
REINFORCED CONCRETE ENDWALL
FOR DOUBLE 54" PIPE - 90° SKEW

SHEET OF
838D22

SHEET OF
838D22

NORTH CAROLINA PROFESSIONAL SEAL 022966 ENGINEER Joel S. Howerton

CONTRACTS STANDARDS AND DEVELOPMENT UNIT
Office 919-707-6950 FAX 919-250-4119

SEE PLATE FOR TITLE

ORIGINAL BY: _____ DATE:
MODIFIED BY: K.KEMPF DATE: 1/16/2013
CHECKED BY: _____ DATE:
FILE SPEC.: Details/kkempf/english/U3615B_2x66EW_2x54EW

$$$$SYSTIME$$$$
$$$$USERNAME$$$$