PROJECT REFERENCE NO.	SHEET NO.
B-5119	E4

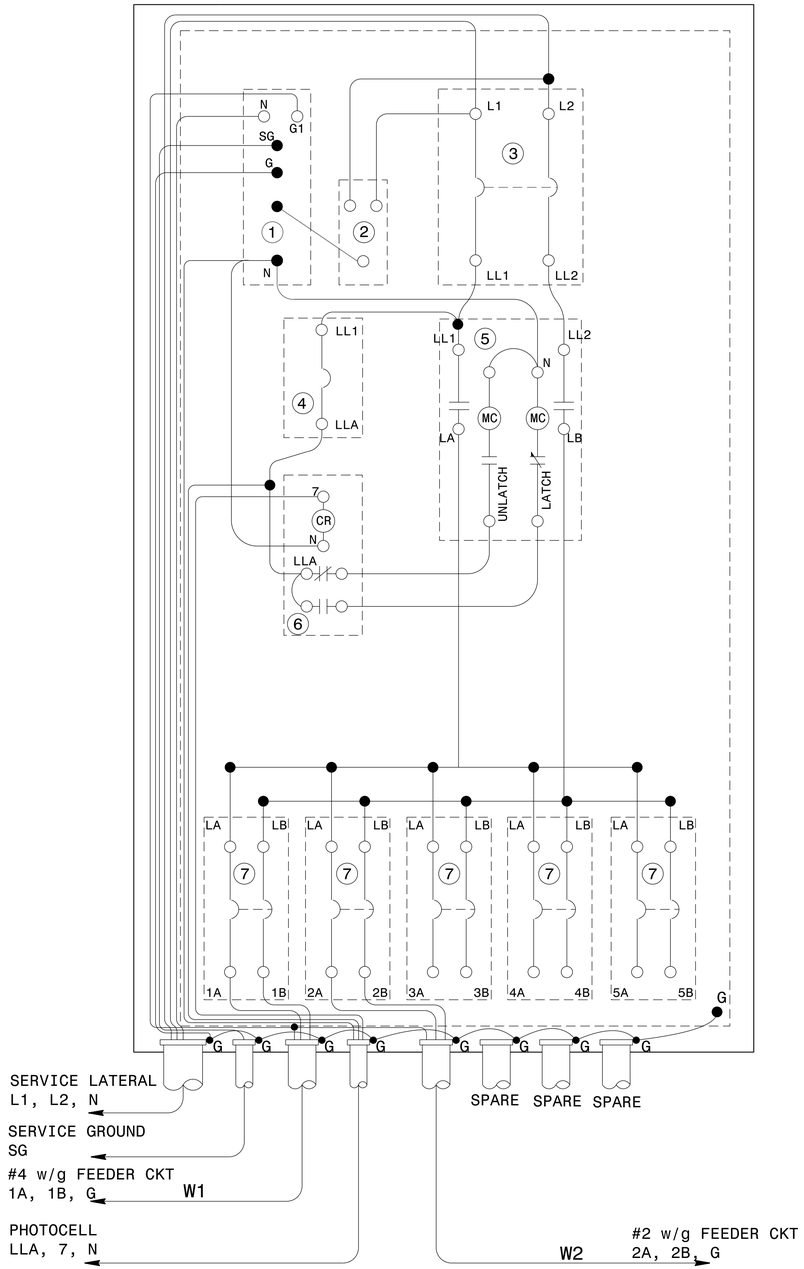

CONTROL SYSTEM "W"
EXISTING SCHEMATIC LAYOUT

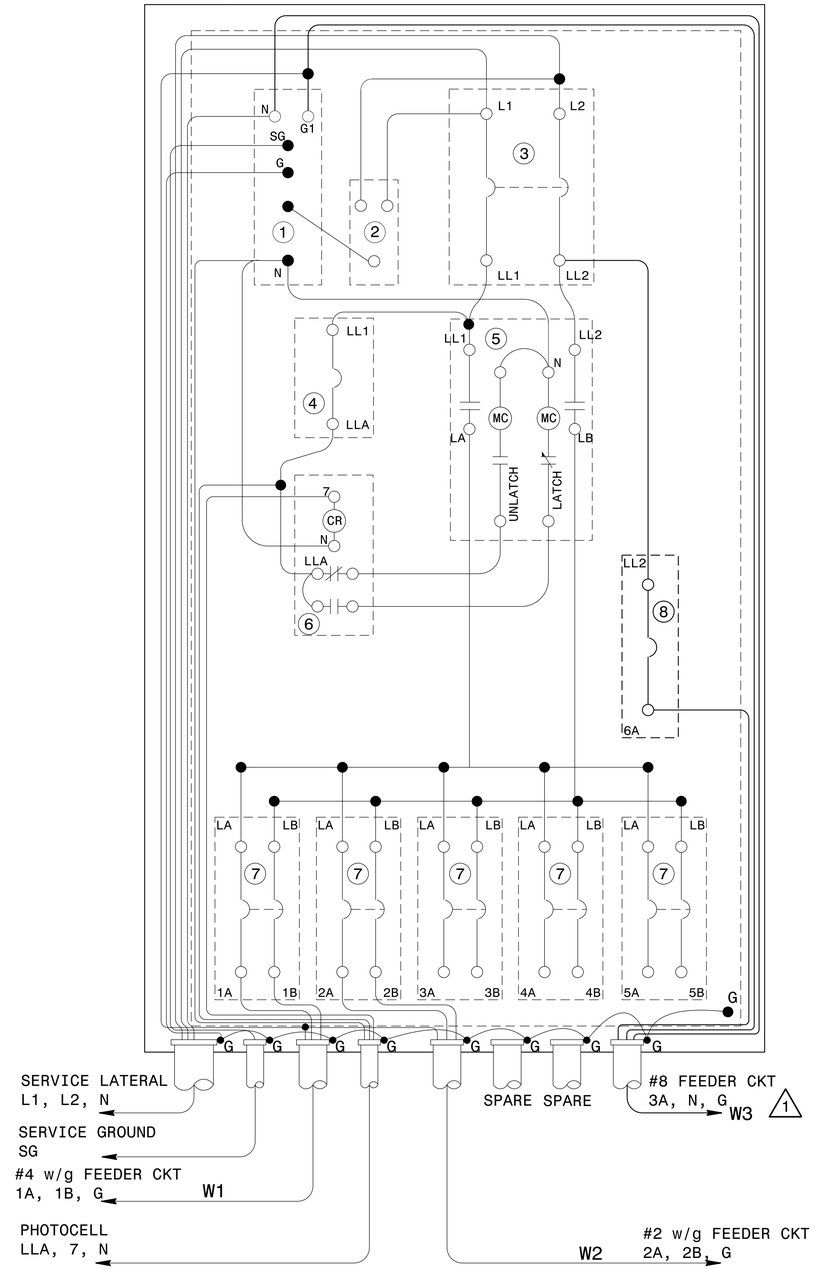

CONTROL SYSTEM "W"
SCHEMATIC LAYOUT AFTER PROPOSED WORK

COMPONENT LIST

1. NEUTRAL BAR
2. LIGHTNING ARRESTER
3. SERVICE CIRCUIT BREAKER
4. CONTROL CIRCUIT BREAKER
5. MECHANICALLY HELD CONTACTOR
6. CONTROL RELAY
7. 240V FEEDER CIRCUIT BREAKER, 50A
8. 120V FEEDER CIRCUIT BREAKER, 20A

DELTA NOTES

1. EXISTING SPARE CONDUITS TERMINATED UNDERGROUND NEAR CONTROL SYSTEM. INTERCEPT ONE SPARE AND INSTALL CIRCUIT W3 (120V) FOR POWER TO PROPOSED ITS CCTV CAMERA.

NORTH CAROLINA PROFESSIONAL SEAL 022582 ENGINEER PAUL KI-BUN CHAN

DocuSigned by: Paul Chan 10/17/2014
F83C4985EEEF4A2...

Rev.	Date	Description	Approved
2			
1			

NORTH CAROLINA DEPARTMENT OF TRANSPORTATION
ROADWAY DESIGN — LIGHTING/ELECTRICAL SECTION

CONTROL SYSTEM

EXISTING CONTROL SYSTEM "W"
SCHEMATIC DETAILS

GUILFORD COUNTY

Drawn By: RGH	Approved By:	Dwg No.:

02/03/98

17-OCT-2014 11:11
R:\Lighting_Electrical\Lighting Design\b5119_le_psh_e4.dgn
rghall AT RD25817