ESTIMATED QUANTITIES

BRIDGE @ STA. 20+92.00 -L-	RIP RAP CLASS II (2'-0" THICK)	GEOTEXTILE FOR DRAINAGE
	TONS	SQUARE YARDS
END BENT 1	215	240
BENT 2	55	60
BENT 3	126	140
END BENT 2	240	265

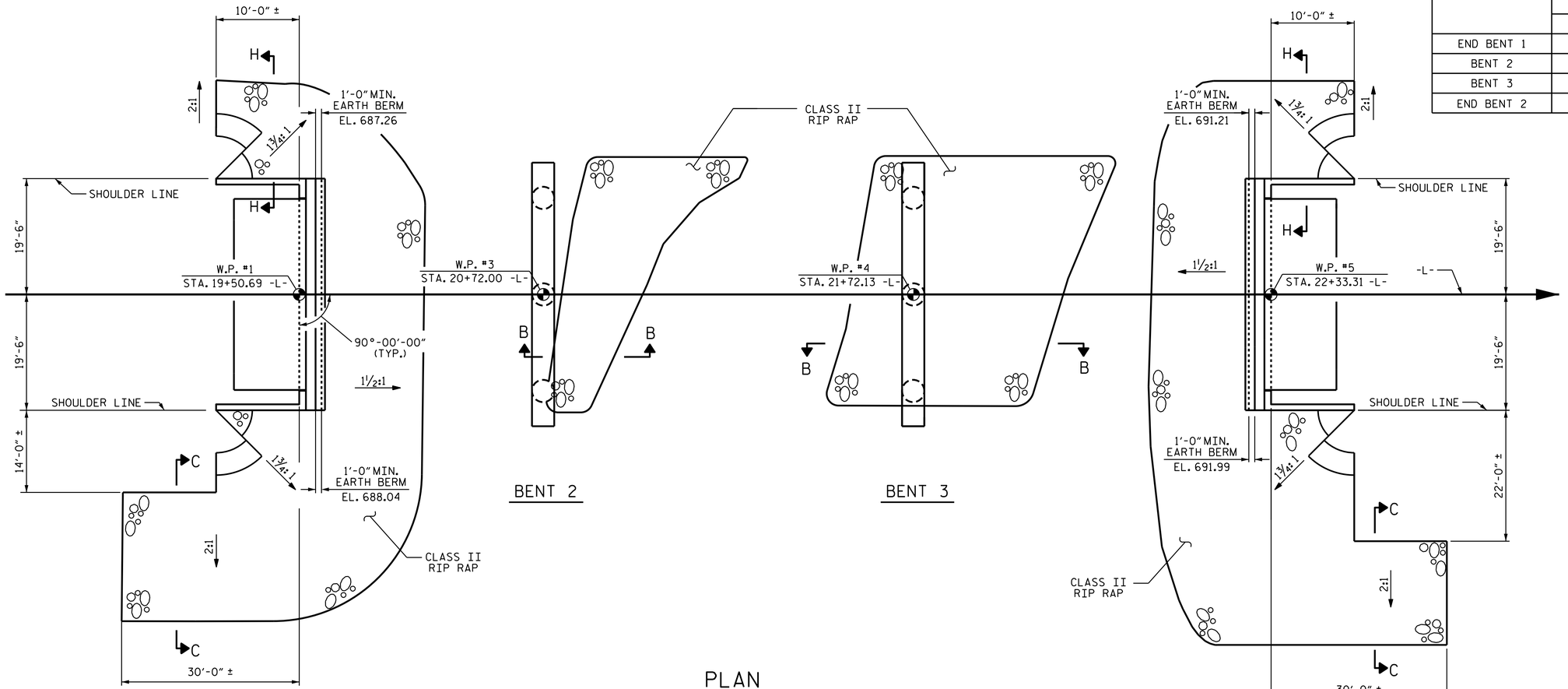

END BENT 1

BENT 2

BENT 3

END BENT 2

PLAN

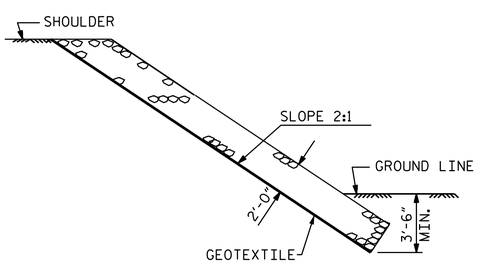

SECTION H-H

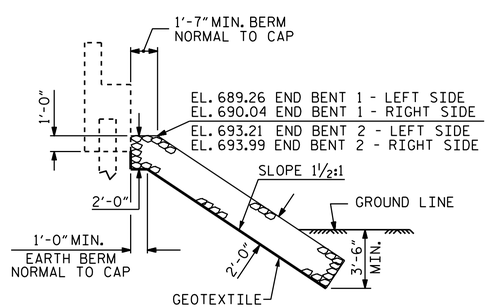

℄ SECTION
BERM RIP RAPPED

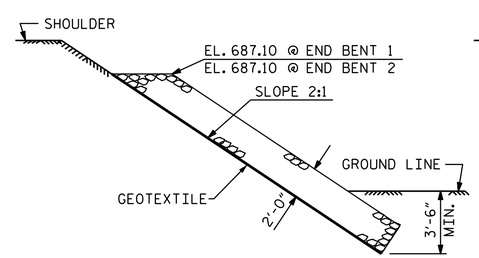

SECTION C-C

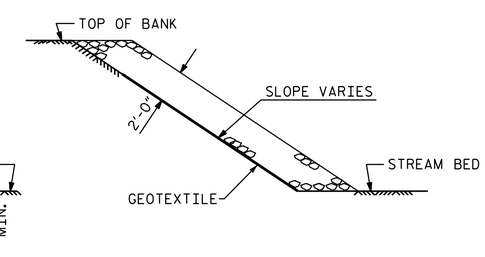

SECTION B-B

PROJECT NO. B-4741
DAVIDSON COUNTY
STATION: 20+92.00 -L-

STATE OF NORTH CAROLINA
DEPARTMENT OF TRANSPORTATION
RALEIGH

STANDARD

RIP RAP DETAILS

NORTH CAROLINA PROFESSIONAL SEAL 23371 ENGINEER VIPUL A. PATEL

Vipul A. Patel
1C15TDE15DM8AA 9/18/2014

REVISIONS						SHEET NO.
NO.	BY:	DATE:	NO.	BY:	DATE:	S-26
1			3			TOTAL SHEETS
2			4			27

ASSEMBLED BY : N.D'AIUTO DATE : 7/9/14
CHECKED BY : T.H. CARROLL DATE : 8/8/14

DRAWN BY : FCJ 2/88
CHECKED BY : ARB 8/88

REV. 8/16/99 RWW/LES
REV. 10/17/00 RWW/LES
REV. 5/1/06R TLA/GM

17-SEP-2014 13:51
R:\Structures\Plans\B4741_SD_RR_01.dgn
vpatel

STD. NO. RR1