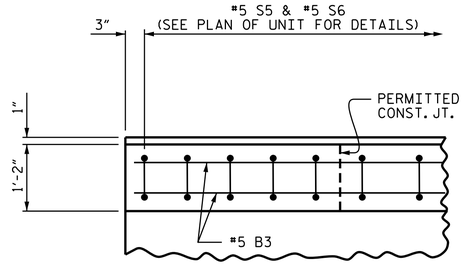

PLAN OF PARAPET

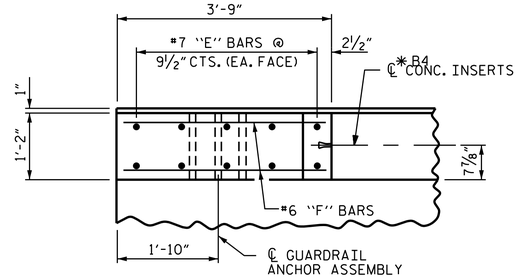

PLAN OF END POST

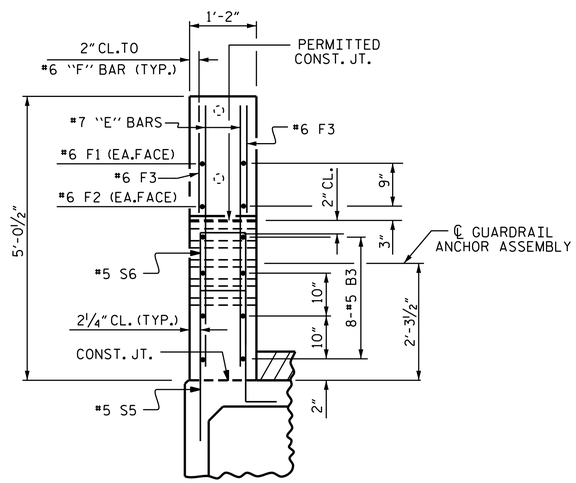

END VIEW

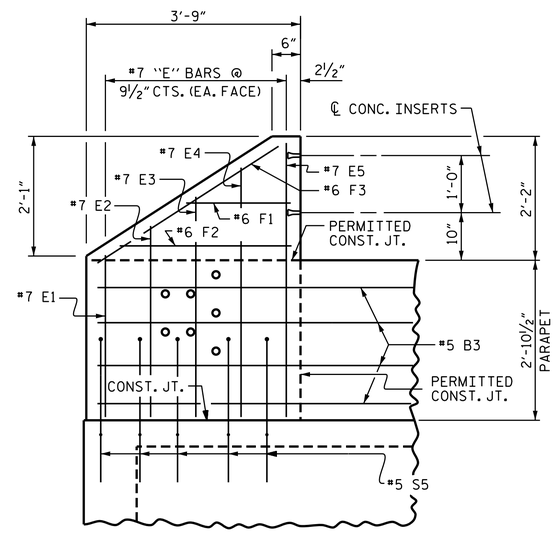

ELEVATION

PARAPET AND END POST FOR TWO BAR RAIL

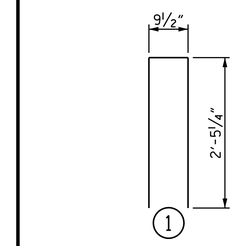

BAR DIMENSIONS ARE OUT TO OUT.

BILL OF MATERIAL

PARAPET AND END POSTS

BAR	NO.	SIZE	TYPE	LENGTH	WEIGHT
* B3	96	#5	STR	21'-1"	2111
* B4	48	#5	STR	16'-7"	830
* B5	80	#5	STR	19'-7"	1634
* E1	8	#7	STR	3'-0"	49
* E2	8	#7	STR	3'-6"	57
* E3	8	#7	STR	4'-0"	65
* E4	8	#7	STR	4'-6"	74
* E5	8	#7	STR	4'-10"	79
* F1	8	#6	STR	1'-10"	22
* F2	8	#6	STR	3'-0"	36
* F3	8	#6	STR	3'-8"	44
* S6	764	#5	1	5'-8"	4516

* EPOXY COATED REINFORCING STEEL	LBS.	9,517
CLASS AA CONCRETE	CU. YDS.	68.4
1'-2" X 2'-10½" CONCRETE PARAPET	LIN. FT.	561.00

NOTES

ALL REINFORCING STEEL IN THE PARAPETS AND END POSTS SHALL BE EPOXY COATED.

#5 S5 BARS ARE INCLUDED IN THE BILL OF MATERIAL FOR BOX BEAM UNITS.

VERTICAL GROOVED CONTRACTION JOINTS, ½" IN DEPTH, SHALL BE TOOLED IN ALL EXPOSED FACES OF THE PARAPET AND IN ACCORDANCE WITH ARTICLE 825-10(B) OF THE STANDARD SPECIFICATIONS. A CONTRACTION JOINT SHALL BE LOCATED AT EACH THIRD POINT BETWEEN PARAPET EXPANSION JOINTS. ONLY ONE CONTRACTION JOINT IS REQUIRED AT MIDPOINT OF PARAPET SEGMENTS LESS THAN 20 FEET IN LENGTH AND NO CONTRACTION JOINTS ARE REQUIRED FOR THOSE SEGMENTS LESS THAN 10 FEET IN LENGTH.

THE ½" EXPANSION JOINT IN THE PARAPET MAY BE SHIFTED SLIGHTLY IN ORDER TO MAINTAIN A 2" MINIMUM CLEARANCE TO THE #5 S5 & #5 S6 BARS.

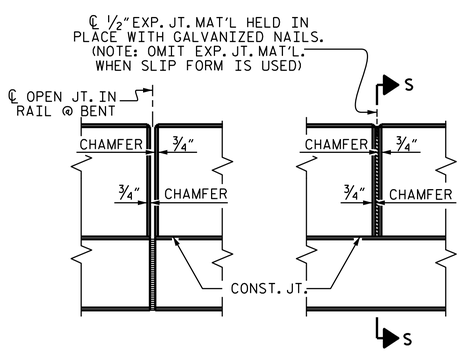

ELEVATION AT EXPANSION JOINTS

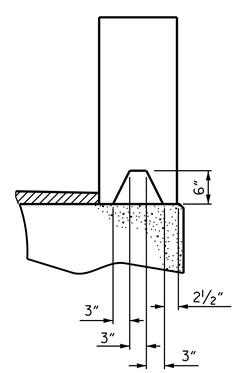

SECTION S-S
AT DAM IN OPEN JOINT
(THIS IS TO BE USED ONLY
WHEN SLIP FORM IS USED)

PARAPET DETAILS

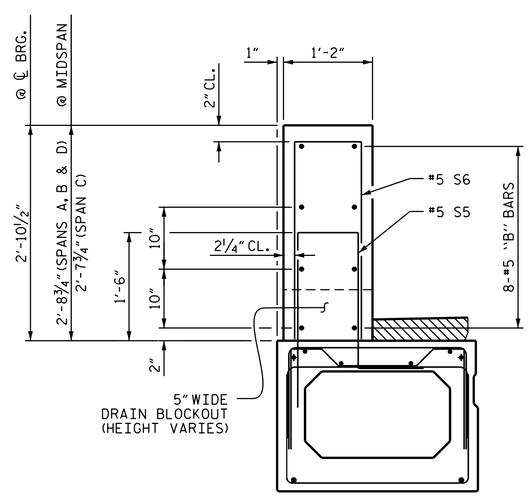

SECTION THRU PARAPET

PROJECT NO. B-4741
DAVIDSON COUNTY
STATION: 20+92.00 -L-

STATE OF NORTH CAROLINA
DEPARTMENT OF TRANSPORTATION
RALEIGH

SUPERSTRUCTURE
END POSTS
&
PARAPET DETAILS

NORTH CAROLINA PROFESSIONAL SEAL 23371 ENGINEER VIPUL A. PATEL

Docusigned by:
Vipul A. Patel
1C157DE15D494AA...
9/18/2014

REVISIONS						SHEET NO.
NO.	BY:	DATE:	NO.	BY:	DATE:	S-14
1			3			TOTAL SHEETS
2			4			27

DRAWN BY :	T. H. CARROLL	DATE :	4/2/14
CHECKED BY :	M. E. GILES	DATE :	5/16/14
DESIGN ENGINEER OF RECORD:	T. H. CARROLL	DATE :	8/18/14

17-SEP-2014 13:50
R:\Structures\Plans\B4741_SD_2MR_01.dgn
vpatel