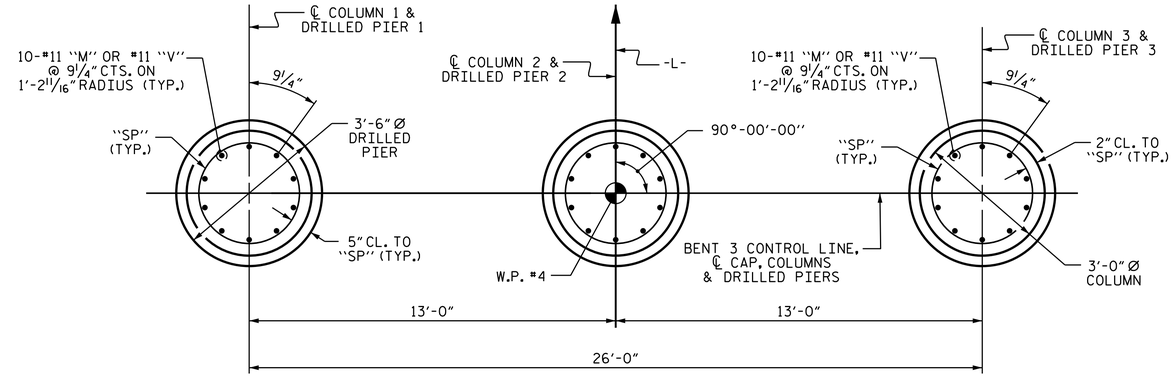

PLAN OF DRILLED PIERS & COLUMNS

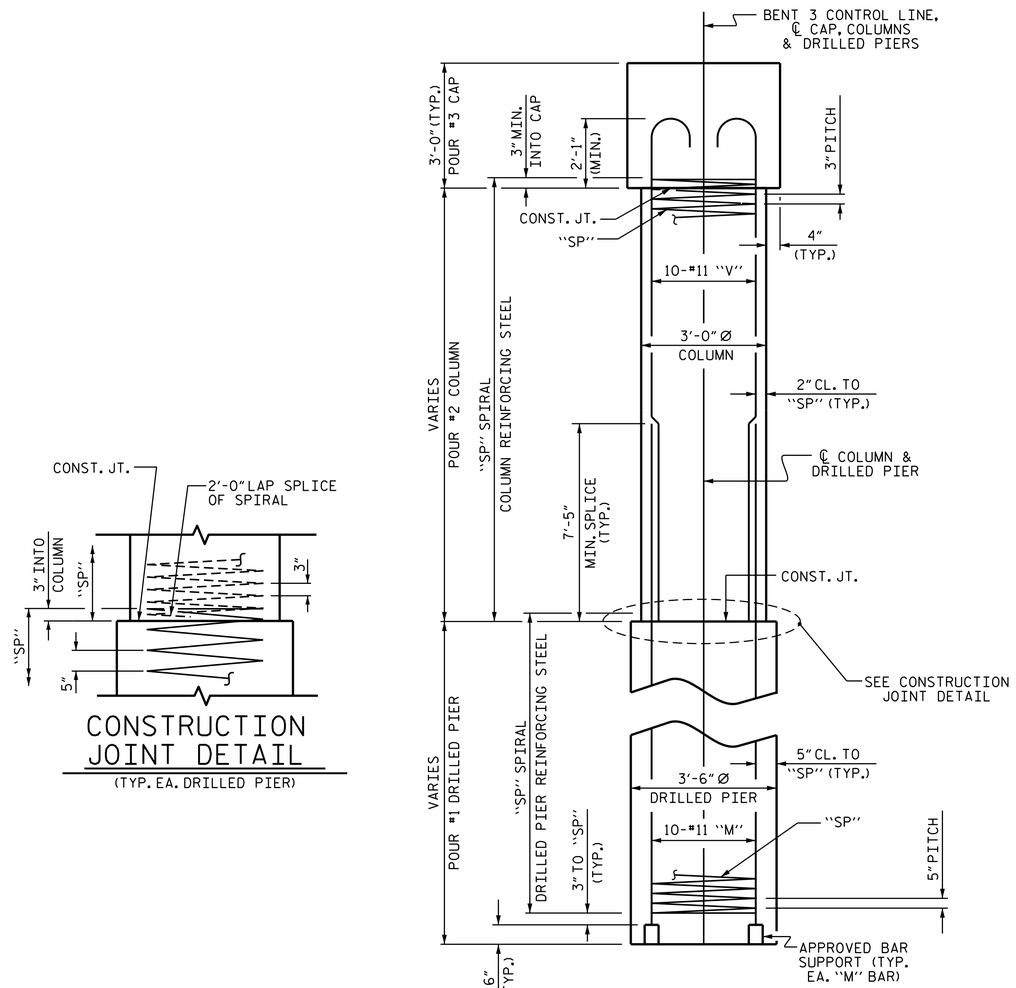

CONSTRUCTION JOINT DETAIL

(TYP. EA. DRILLED PIER)

END ELEVATION

BAR TYPES

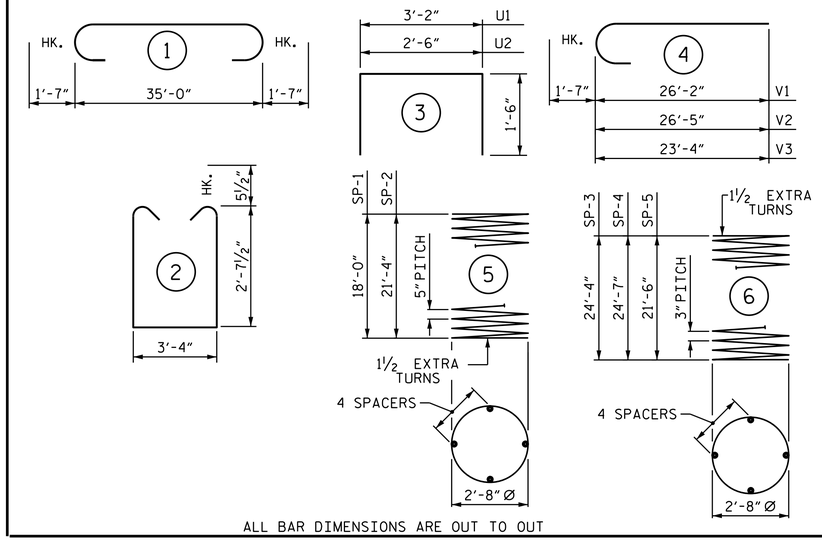

ALL BAR DIMENSIONS ARE OUT TO OUT

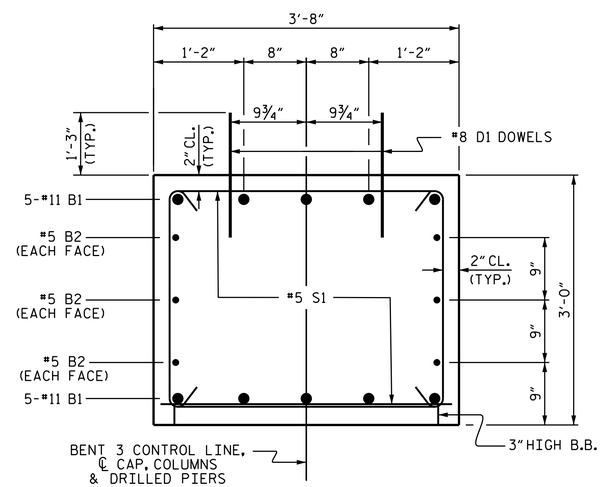

SECTION THRU CAP

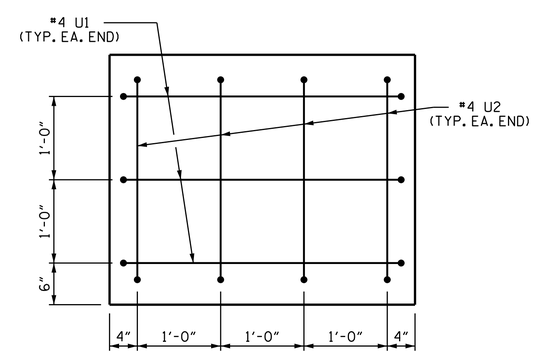

END OF CAP VIEW

(TYP. EA. END)

BILL OF MATERIAL

BENT 3

BAR	NO.	SIZE	TYPE	LENGTH	WEIGHT
B1	10	#11	1	38'-2"	2028
B2	6	#5	STR	35'-2"	220
D1	44	#8	STR	2'-3"	264
M1	20	#11	STR	28'-5"	3020
M2	10	#11	STR	31'-9"	1687
S1	60	#5	2	9'-6"	595
U1	6	#4	3	6'-2"	25
U2	8	#4	3	5'-6"	29
V1	10	#11	4	27'-9"	1474
V2	10	#11	4	28'-0"	1488
V3	10	#11	4	24'-11"	1324
REINFORCING STEEL				LBS.	12,154
SP-1	2	*	5	368'-1"	768
SP-2	1	*	5	433'-11"	453
SP-3	1	**	6	816'-10"	546
SP-4	1	**	6	825'-1"	551
SP-5	1	**	6	721'-11"	482
SPIRAL COLUMN REINFORCING STEEL				LBS.	2,800

* THE "SP" SPIRAL REINFORCING STEEL SHALL BE W31 OR D-31 COLD DRAWN WIRE OR #5 PLAIN OR DEFORMED BAR

** THE "SP" SPIRAL REINFORCING STEEL SHALL BE W20 OR D-20 COLD DRAWN WIRE OR #4 PLAIN OR DEFORMED BAR

CLASS A CONCRETE BREAKDOWN

POUR #2 (COLUMNS)	C.Y.	18.2
POUR #3 (CAP)	C.Y.	14.5
TOTAL CLASS A CONCRETE	C.Y.	32.7

DRILLED PIER QUANTITIES

DRILLED PIER CONCRETE		
POUR #1 (DRILLED PIERS)	C.Y.	21.0
3'-6" Ø DRILLED PIER IN SOIL	LIN. FT.	22.83
3'-6" Ø DRILLED PIER NOT IN SOIL	LIN. FT.	36.00
PERMANENT STEEL CASING FOR 3'-6" Ø DRILLED PIER	LIN. FT.	11.83
CSL TUBES	LIN. FT.	257.33

PROJECT NO. B-4741

DAVIDSON COUNTY

STATION: 20+92.00 -L-

SHEET 2 OF 2

STATE OF NORTH CAROLINA
DEPARTMENT OF TRANSPORTATION
RALEIGH

SUBSTRUCTURE

BENT 3

NORTH CAROLINA PROFESSIONAL SEAL 23371 ENGINEER VIPUL A. PATEL

DocuSigned by: Vipul A. Patel 1C157DE15D464AA... 9/18/2014

REVISIONS						SHEET NO.
NO.	BY:	DATE:	NO.	BY:	DATE:	S-25
1			3			TOTAL SHEETS
2			4			27

DRAWN BY :	T. H. CARROLL	DATE :	8/13/14
CHECKED BY :	H. A. LOCKLEAR	DATE :	8/21/14
DESIGN ENGINEER OF RECORD:	T. H. CARROLL	DATE :	8/29/14

17-SEP-2014 13:51
R:\Structures\Plans\B4741_SD_B3_01.dgn
vpatel