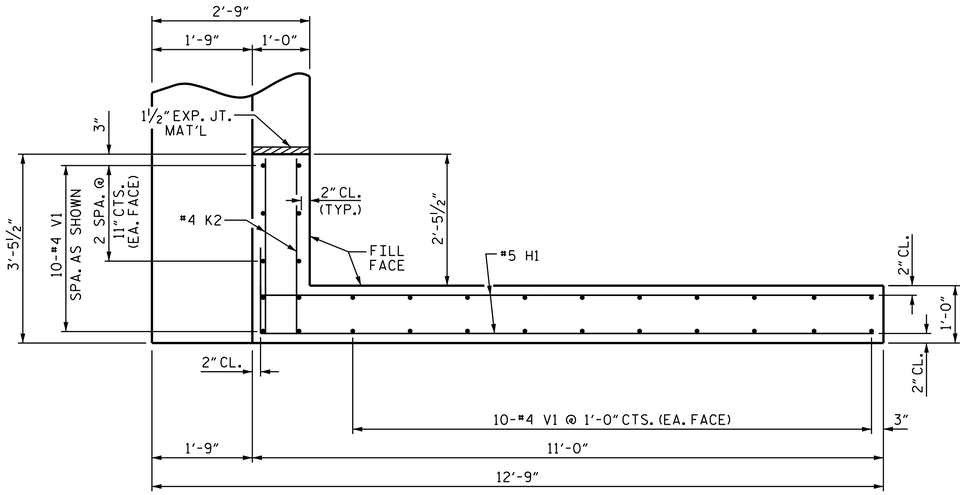

PLAN OF WING (W1)

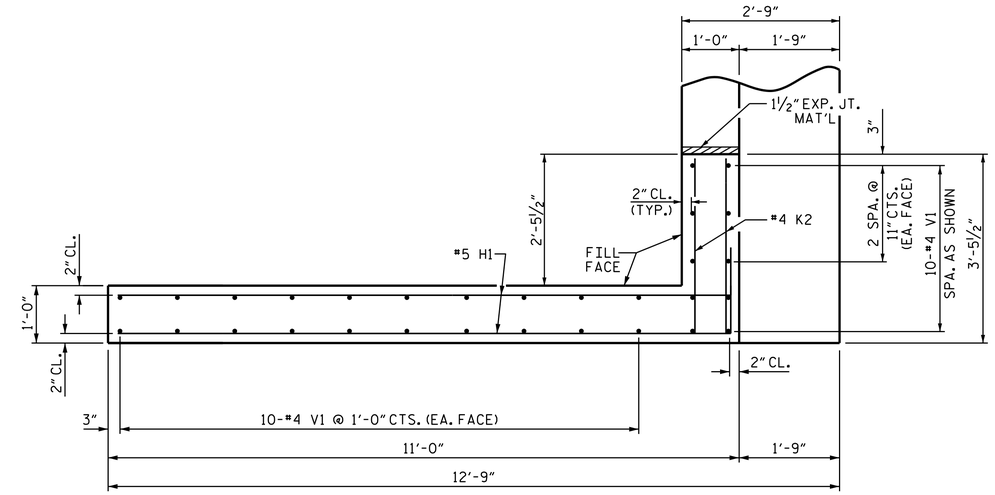

PLAN OF WING (W2)

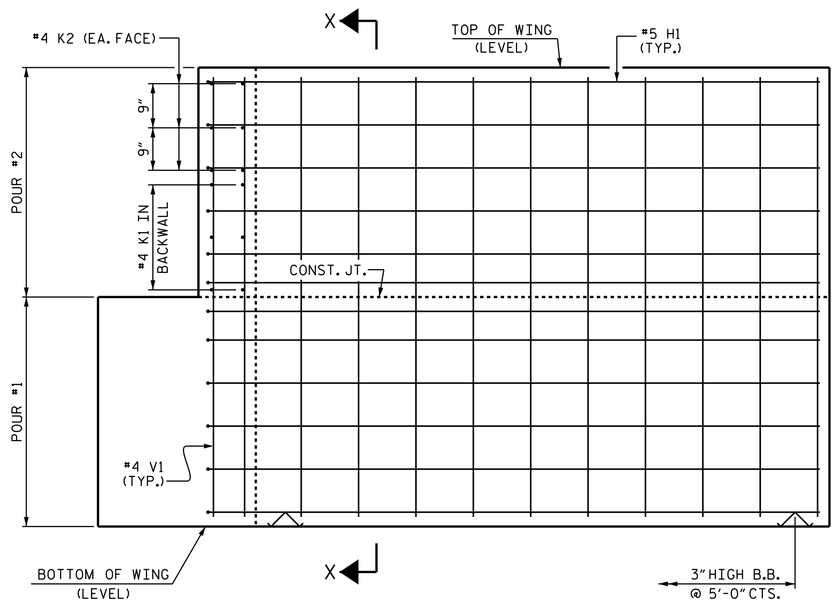

ELEVATION OF WING (W1)

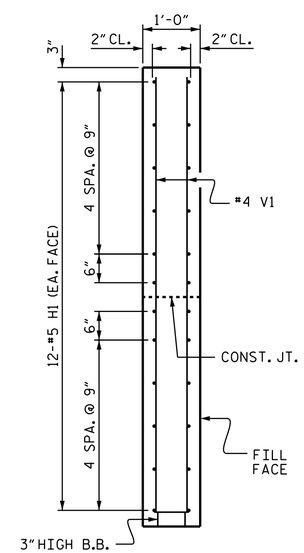

SECTION X-X

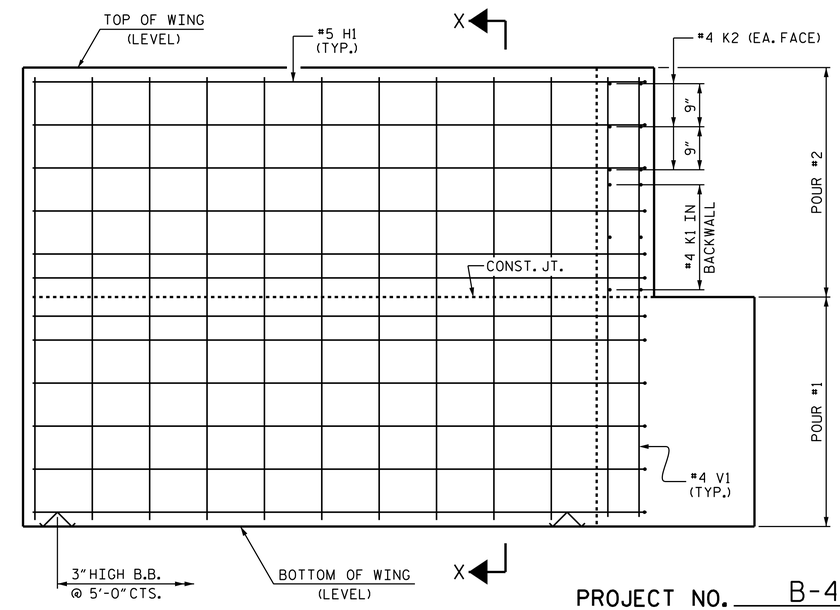

ELEVATION OF WING (W2)

PROJECT NO. B-4741

DAVIDSON COUNTY

STATION: 20+92.00 -L-

SHEET 3 OF 4

STATE OF NORTH CAROLINA
DEPARTMENT OF TRANSPORTATION
RALEIGH

SUBSTRUCTURE

END BENT WING DETAILS

NORTH CAROLINA PROFESSIONAL SEAL 23371 ENGINEER VIPUL A. PATEL

DocuSigned by: Vipul A. Patel 1C157DE15D464AA... 9/18/2014

REVISIONS							SHEET NO.
NO.	BY:	DATE:	NO.	BY:	DATE:		S-18
1			3				TOTAL SHEETS
2			4				27

DRAWN BY : T. H. CARROLL DATE : 7/9/14
CHECKED BY : H. A. LOCKLEAR DATE : 8/13/14
DESIGN ENGINEER OF RECORD: T. H. CARROLL DATE : 8/18/14

17-SEP-2014 13:50
R:\Structures\Plans\B4741_SD_EBT_01.dgn
vpatel