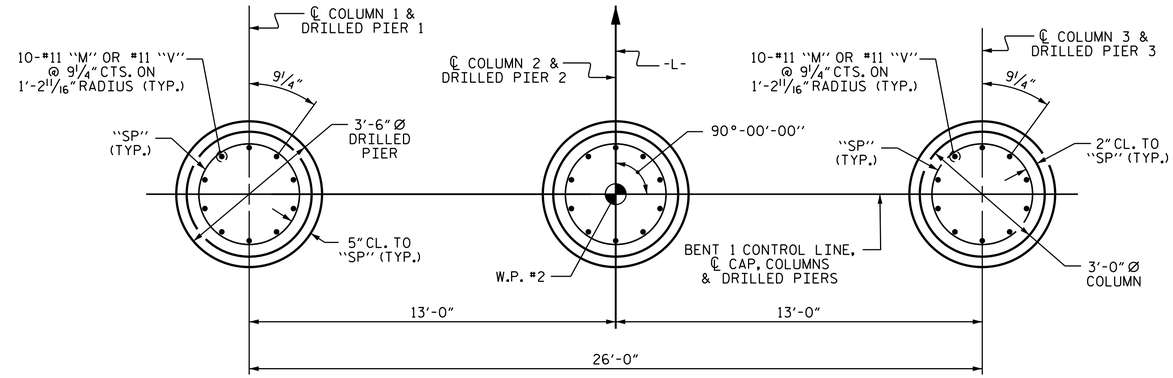

PLAN OF DRILLED PIERS & COLUMNS

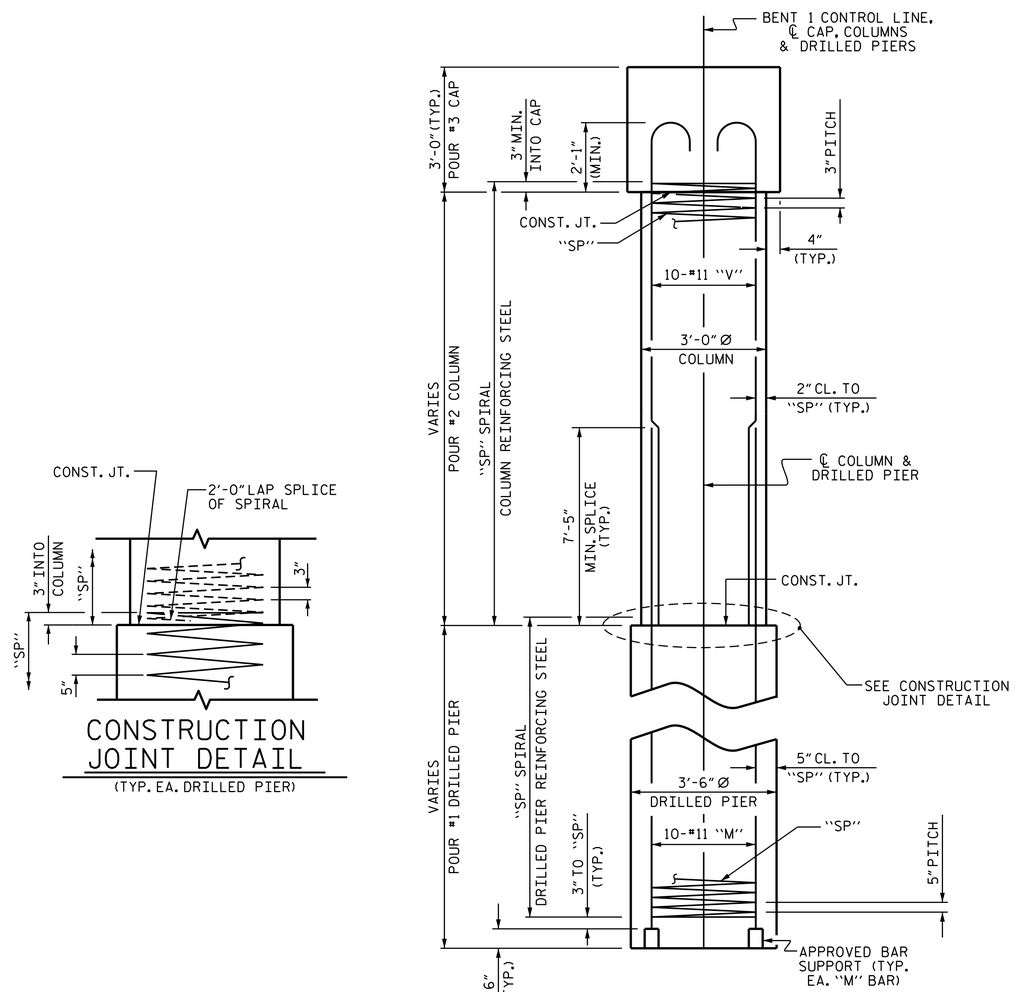

CONSTRUCTION JOINT DETAIL

(TYP. EA. DRILLED PIER)

END ELEVATION

BAR TYPES

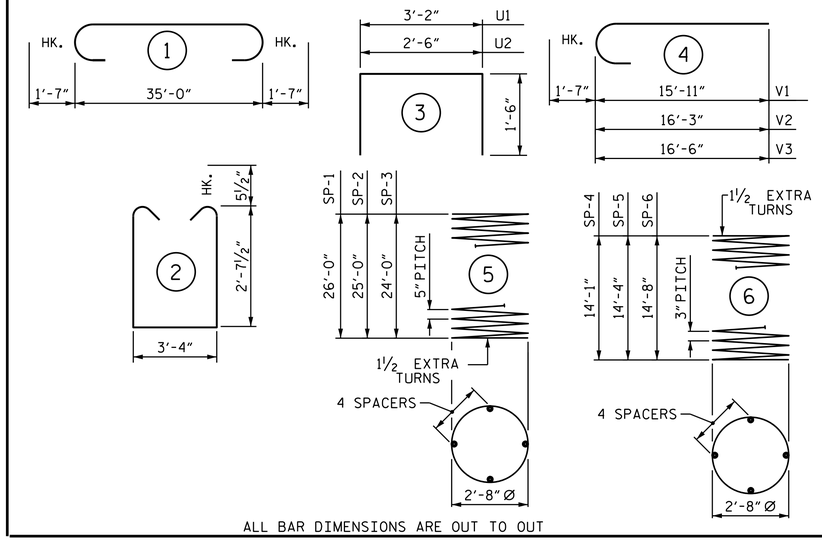

ALL BAR DIMENSIONS ARE OUT TO OUT

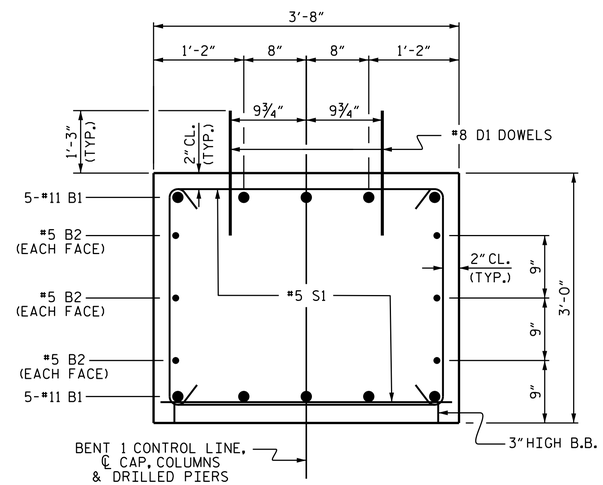

SECTION THRU CAP

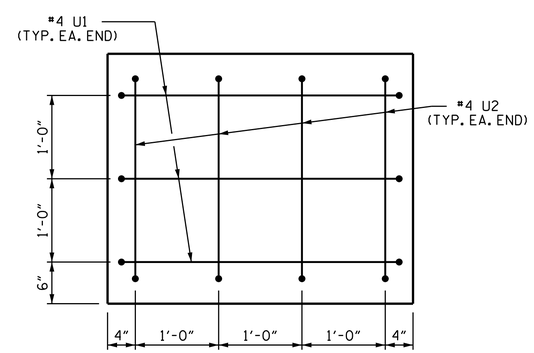

END OF CAP VIEW

(TYP. EA. END)

BILL OF MATERIAL

BENT 1

BAR	NO.	SIZE	TYPE	LENGTH	WEIGHT
B1	10	#11	1	38'-2"	2028
B2	6	#5	STR	35'-2"	220
D1	44	#8	STR	2'-3"	264
M1	10	#11	STR	36'-5"	1935
M2	10	#11	STR	35'-5"	1882
M3	10	#11	STR	34'-5"	1829
S1	60	#5	2	9'-6"	595
U1	6	#4	3	6'-2"	25
U2	8	#4	3	5'-6"	29
V1	10	#11	4	17'-6"	930
V2	10	#11	4	17'-10"	947
V3	10	#11	4	18'-1"	961
REINFORCING STEEL				LBS.	11,645
SP-1	1	*	5	526'-5"	549
SP-2	1	*	5	505'-10"	528
SP-3	1	*	5	487'-4"	508
SP-4	1	**	6	478'-7"	320
SP-5	1	**	6	486'-10"	325
SP-6	1	**	6	497'-2"	332
SPIRAL COLUMN REINFORCING STEEL				LBS.	2,562

* THE "SP" SPIRAL REINFORCING STEEL SHALL BE W31 OR D-31 COLD DRAWN WIRE OR #5 PLAIN OR DEFORMED BAR

** THE "SP" SPIRAL REINFORCING STEEL SHALL BE W20 OR D-20 COLD DRAWN WIRE OR #4 PLAIN OR DEFORMED BAR

CLASS A CONCRETE BREAKDOWN		
POUR #2 (COLUMNS)	C.Y.	11.0
POUR #3 (CAP)	C.Y.	14.5
TOTAL CLASS A CONCRETE	C.Y.	25.5

DRILLED PIER QUANTITIES		
DRILLED PIER CONCRETE		
POUR #1 (DRILLED PIERS)	C.Y.	27.3
3'-6" Ø DRILLED PIER IN SOIL	LIN. FT.	41.50
3'-6" Ø DRILLED PIER NOT IN SOIL	LIN. FT.	35.00
CSL TUBES	LIN. FT.	336.00

PROJECT NO. B-4741

DAVIDSON COUNTY

STATION: 20+92.00 -L-

SHEET 2 OF 2

STATE OF NORTH CAROLINA
DEPARTMENT OF TRANSPORTATION
RALEIGH

SUBSTRUCTURE

BENT 1

NORTH CAROLINA PROFESSIONAL SEAL 23371 ENGINEER VIPUL A. PATEL

DocuSigned by: Vipul A. Patel 1C157DE15D464AA... 9/18/2014

REVISIONS						SHEET NO.
NO.	BY:	DATE:	NO.	BY:	DATE:	S-21
1			3			TOTAL SHEETS
2			4			27

DRAWN BY :	T. H. CARROLL	DATE :	8/13/14
CHECKED BY :	H. A. LOCKLEAR	DATE :	8/21/14
DESIGN ENGINEER OF RECORD:	T. H. CARROLL	DATE :	8/29/14

17-SEP-2014 13:51
R:\Structures\Plans\B4741_SD_B1_01.dgn
vpatel