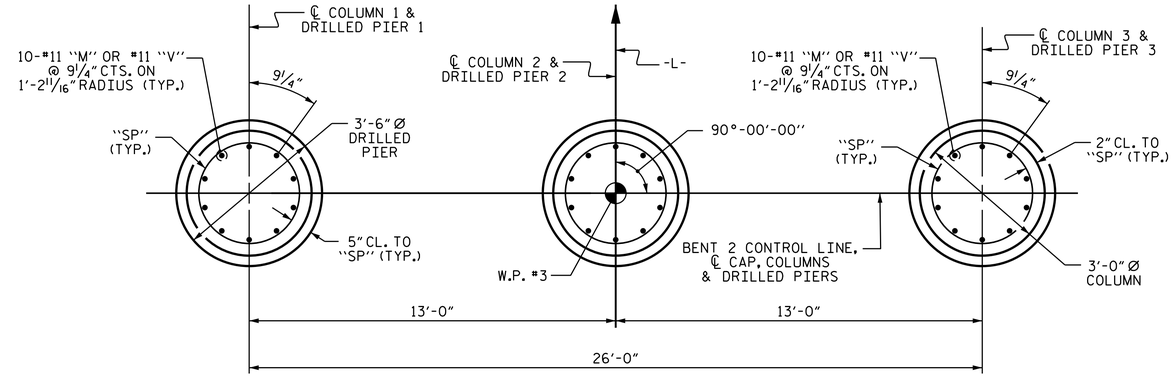

PLAN OF DRILLED PIERS & COLUMNS

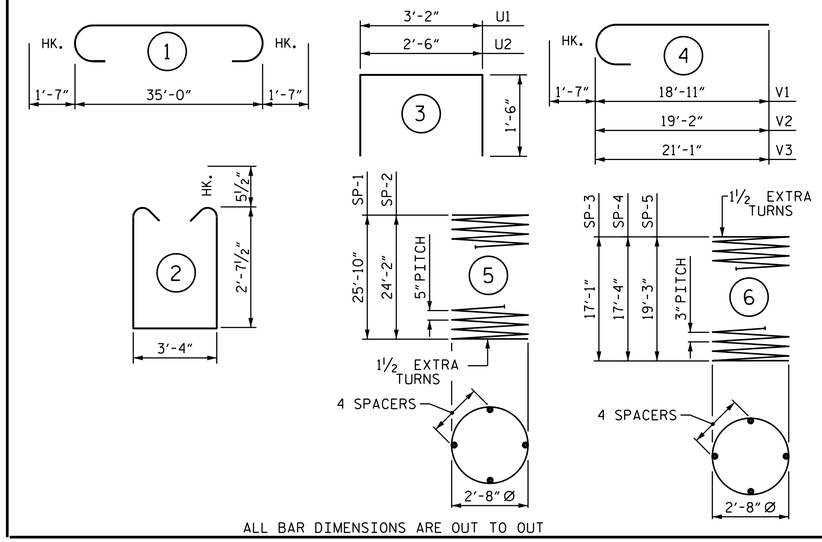

BILL OF MATERIAL

BENT 2

BAR	NO.	SIZE	TYPE	LENGTH	WEIGHT
B1	10	#11	1	38'-2"	2028
B2	6	#5	STR	35'-2"	220
D1	44	#8	STR	2'-3"	264
M1	30	#11	STR	36'-3"	5778
S1	60	#5	2	9'-6"	595
U1	6	#4	3	6'-2"	25
U2	8	#4	3	5'-6"	29
V1	10	#11	4	20'-6"	1089
V2	10	#11	4	20'-9"	1102
V3	10	#11	4	22'-8"	1204
REINFORCING STEEL				LBS.	12,334
SP-1	2	*	5	522'-4"	1090
SP-2	1	*	5	491'-5"	513
SP-3	1	**	6	577'-7"	386
SP-4	1	**	6	585'-10"	391
SP-5	1	**	6	647'-8"	433
SPIRAL COLUMN REINFORCING STEEL				LBS.	2,813

* THE "SP" SPIRAL REINFORCING STEEL SHALL BE W31 OR D-31 COLD DRAWN WIRE OR #5 PLAIN OR DEFORMED BAR

** THE "SP" SPIRAL REINFORCING STEEL SHALL BE W20 OR D-20 COLD DRAWN WIRE OR #4 PLAIN OR DEFORMED BAR

CLASS A CONCRETE BREAKDOWN

POUR #2 (COLUMNS)	C.Y.	13.8
POUR #3 (CAP)	C.Y.	14.5
TOTAL CLASS A CONCRETE	C.Y.	28.3

DRILLED PIER QUANTITIES

DRILLED PIER CONCRETE		
POUR #1 (DRILLED PIERS)	C.Y.	27.6
3'-6" Ø DRILLED PIER IN SOIL	LIN. FT.	42.32
3'-6" Ø DRILLED PIER NOT IN SOIL	LIN. FT.	35.00
PERMANENT STEEL CASING FOR 3'-6" Ø DRILLED PIER	LIN. FT.	44.29
CSL TUBES	LIN. FT.	339.28

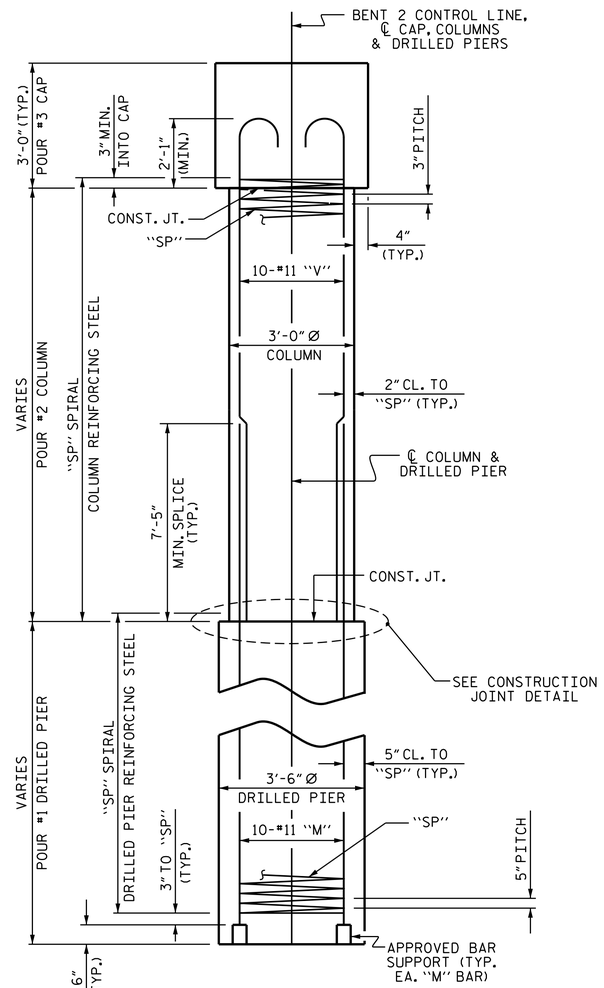

END ELEVATION

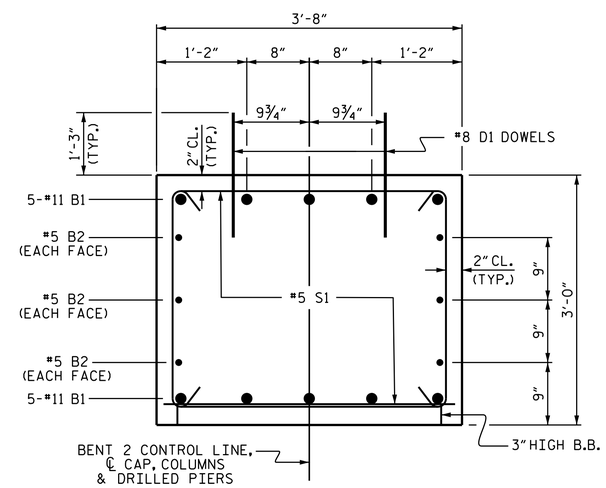

SECTION THRU CAP

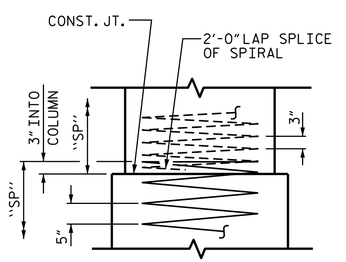

CONSTRUCTION JOINT DETAIL

(TYP. EA. DRILLED PIER)

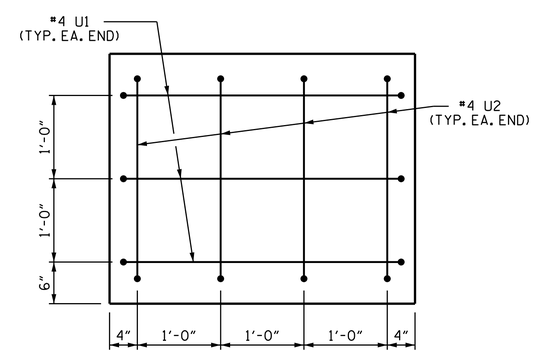

END OF CAP VIEW

(TYP. EA. END)

PROJECT NO. B-4741

DAVIDSON COUNTY

STATION: 20+92.00 -L-

SHEET 2 OF 2

STATE OF NORTH CAROLINA
DEPARTMENT OF TRANSPORTATION
RALEIGH

SUBSTRUCTURE

BENT 2

NORTH CAROLINA PROFESSIONAL SEAL 23371 ENGINEER VIPUL A. PATEL

DocuSigned by: Vipul A. Patel 1C157DE15D464AA... 9/18/2014

REVISIONS							SHEET NO.
NO.	BY:	DATE:	NO.	BY:	DATE:		S-23
1			3				TOTAL SHEETS
2			4				27

DRAWN BY :	T. H. CARROLL	DATE :	8/13/14
CHECKED BY :	H. A. LOCKLEAR	DATE :	8/21/14
DESIGN ENGINEER OF RECORD:	T. H. CARROLL	DATE :	8/29/14

17-SEP-2014 13:51
R:\Structures\Plans\B4741_SD_B2_01.dgn
vpatel