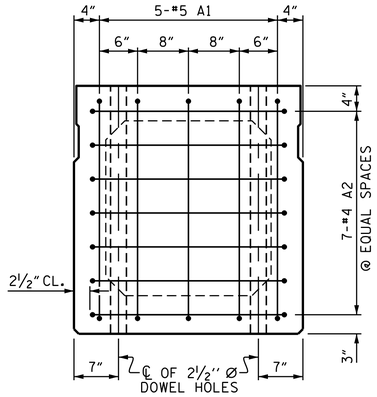

END ELEVATION

SHOWING PLACEMENT OF #5 & #4 "A" BARS AND LOCATION OF DOWEL HOLES. (INTERIOR BOX BEAM SECTION SHOWN-EXTERIOR SECTION SIMILAR EXCEPT SHEAR KEY LOCATION. STRAND LAYOUT NOT SHOWN.)

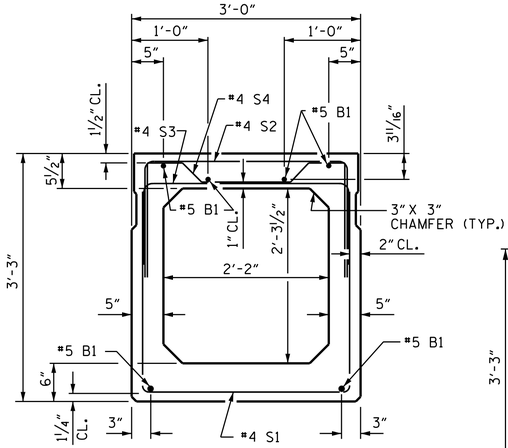

INTERIOR BOX BEAM SECTION

(STRAND LAYOUT NOT SHOWN)

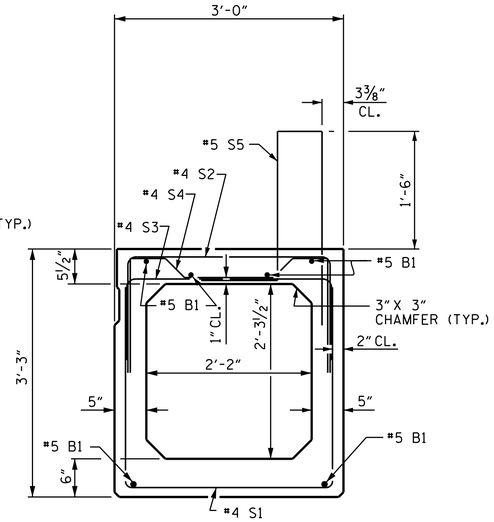

EXTERIOR BOX BEAM SECTION

(STRAND LAYOUT NOT SHOWN)

0.6" Ø LOW RELAXATION STRAND LAYOUT

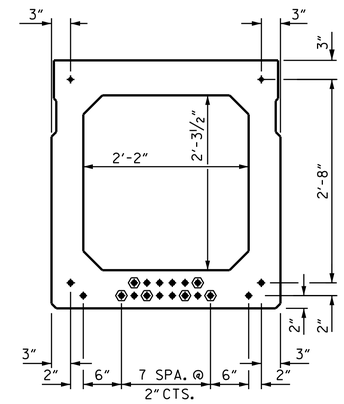

TYPICAL STRAND LOCATION

(20 STRANDS REQUIRED)

BAR TYPES

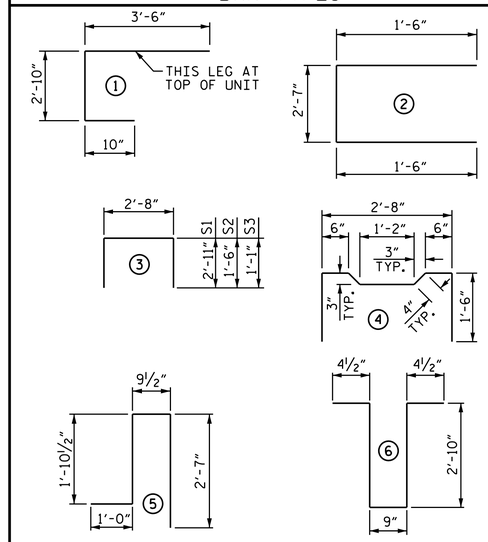

ALL BAR DIMENSIONS ARE OUT TO OUT.

DEBONDING LEGEND

● FULLY BONDED STRANDS

⬢ STRANDS DEBONDED FOR 12'-0" FROM END OF GIRDER

BOND SHALL BE BROKEN ON STRANDS AS SHOWN FOR THE SPECIFIED LENGTH FROM EACH END OF THE BOX BEAM. SEE STANDARD SPECIFICATIONS ARTICLE 1078-7.

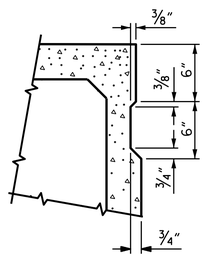

SHEAR KEY DETAIL

NOTE: OMIT SHEAR KEY ON OUTSIDE FACE OF EXTERIOR BOX BEAMS.

GRADE 270 STRANDS	
	0.6" Ø L.R.
AREA (SQUARE INCHES)	0.217
ULTIMATE STRENGTH (LBS. PER STRAND)	58,600
APPLIED PRESTRESS (LBS. PER STRAND)	43,950

BILL OF MATERIAL FOR ONE BOX BEAM SECTION

				EXTERIOR UNIT		INTERIOR UNIT	
BAR	NUMBER	SIZE	TYPE	LENGTH	WEIGHT	LENGTH	WEIGHT
A1	10	#5	1	7'-2"	75	7'-2"	75
A2	32	#4	2	5'-7"	119	5'-7"	119
B1	6	#5	STR	59'-8"	373	59'-8"	373
K1	9	#4	6	7'-2"	43	7'-2"	43
K2	6	#4	STR	2'-7"	10	2'-7"	10
S1	54	#4	3	8'-6"	307	8'-6"	307
S2	54	#4	3	5'-8"	204	5'-8"	204
S3	87	#4	3	4'-10"	281	4'-10"	281
S4	33	#4	4	5'-10"	129	5'-10"	129
✱ S5	82	#5	5	6'-3"	535	—	—
REINFORCING STEEL					LBS. 1,541		LBS. 1,541
✱ EPOXY COATED REINF. STEEL					LBS. 535		—
5,000 P.S.I. CONCRETE					CU. YDS. 12.0		CU. YDS. 11.9
0.6" Ø L.R. STRANDS					No. 20		No. 20

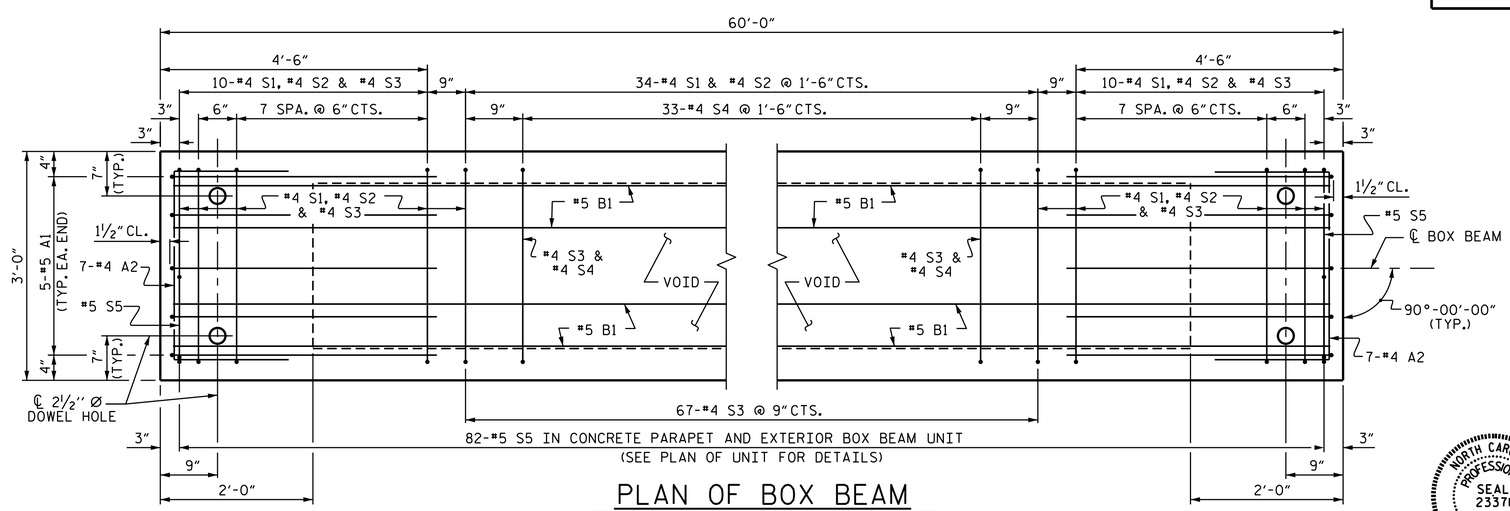

PLAN OF BOX BEAM

EXTERIOR UNIT SHOWN, INTERIOR UNIT SIMILAR EXCEPT OMIT #5 S5 BARS.
FOR LOCATION OF DIAPHRAGMS, SEE PLAN OF SPANS.
FOR REINFORCING STEEL IN DIAPHRAGMS, SEE DIAPHRAGM DETAILS.

PROJECT NO. B-4741
DAVIDSON COUNTY
STATION: 20+92.00 -L-

SHEET 4 OF 6

STATE OF NORTH CAROLINA
DEPARTMENT OF TRANSPORTATION
RALEIGH

STANDARD
3'-0" X 3'-3"
PRESTRESSED CONCRETE
BOX BEAM UNIT
SPANS A, B, & D

NORTH CAROLINA PROFESSIONAL SEAL 23371 ENGINEER VIPUL A. PATEL
DocuSigned by: Vipul A. Patel 1C157DE15D46A4A... 9/18/2014

REVISIONS						SHEET NO.
NO.	BY:	DATE:	NO.	BY:	DATE:	S-8
1			3			TOTAL SHEETS
2			4			27

STD. NO. PCBB6

ASSEMBLED BY : T. H. CARROLL	DATE : 3/19/14	
CHECKED BY : M. E. GILES	DATE : 4/28/14	
DRAWN BY : TLA 5/05	ADDED 7/11/05	
CHECKED BY : GM 6/05	REV. 5/1/06 TLA/GM	REV. 10/1/11 MAA/GM

DESIGN ENGINEER OF RECORD:
T. H. CARROLL DATE : 8/18/14

17-SEP-2014 13:50
R:\Structures\Plans\B4741_SD_BX_01.dgn
vpatel