DocuSign Envelope ID: 0467AB1B-32B1-4334-81D0-7D50B5979B14

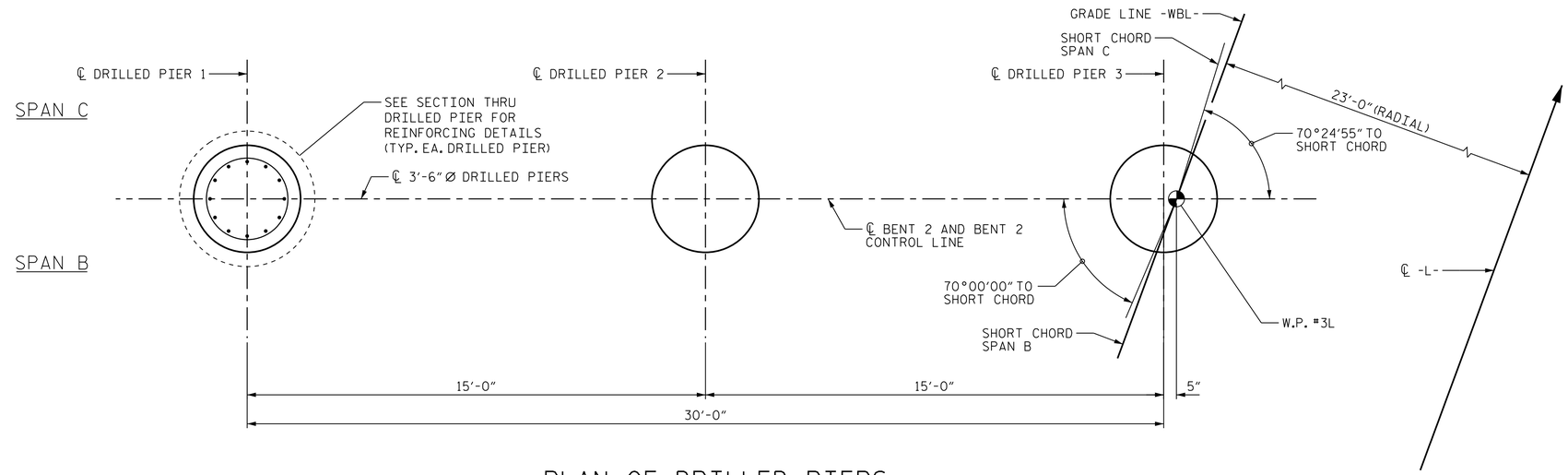

PLAN OF DRILLED PIERS

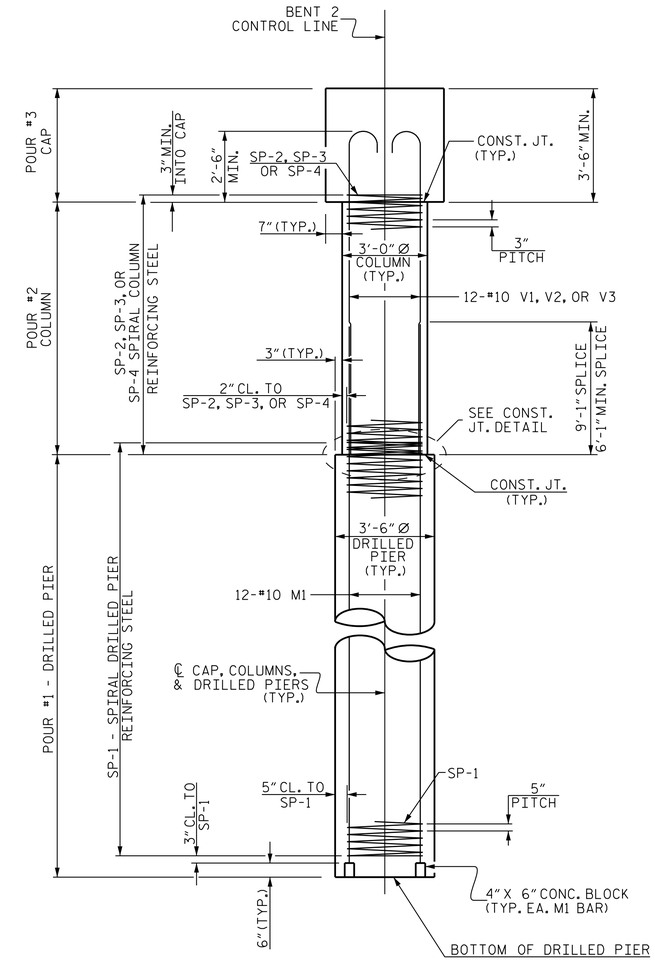

END ELEVATION

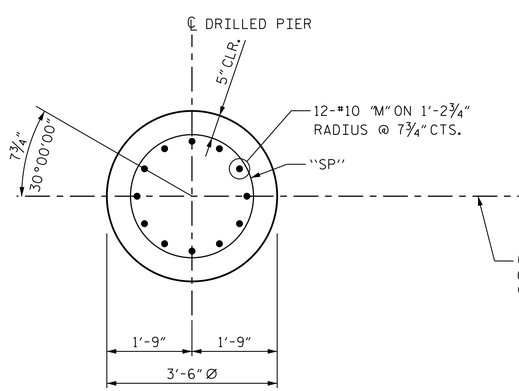

SECTION THRU DRILLED PIER
TYPICAL ALL DRILLED PIERS

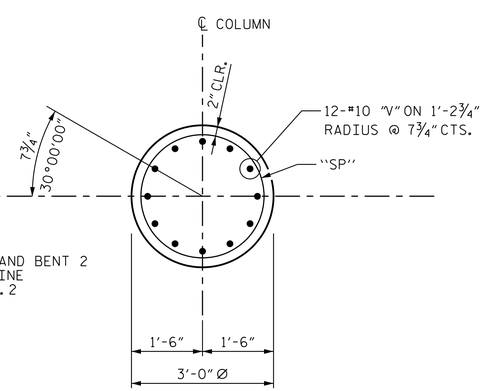

SECTION THRU COLUMN
TYPICAL ALL COLUMNS

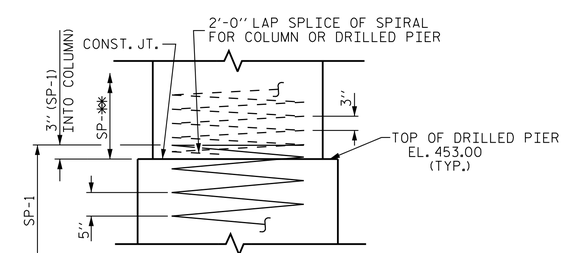

CONSTRUCTION JOINT DETAIL

SP-✱✱ DENOTES SP-2, SP-3, OR SP-4

PROJECT NO. R-0623
MONTGOMERY COUNTY
STATION: 123+82.50 -L-

SHEET 2 OF 3

STATE OF NORTH CAROLINA
DEPARTMENT OF TRANSPORTATION
RALEIGH

SUBSTRUCTURE

BENT #2

(WBL)

REVISIONS						SHEET NO.
NO.	BY:	DATE:	NO.	BY:	DATE:	S-35
1			3			TOTAL SHEETS
2			4			82

STR. #1

Stantec
Stantec Consulting Services Inc.
801 Jones Franklin Road
Suite 300
Raleigh, NC 27606
Tel. (919) 851-6866
Fax. (919) 851-7024
www.stantec.com
License No. F-0672

DRAWN BY : J. L. HENNEKES DATE : 03-06-14
CHECKED BY : J. T. KELVINGTON DATE : 03-08-14
DESIGN ENGINEER OF RECORD: J. T. KELVINGTON DATE : 03-11-14

NORTH CAROLINA PROFESSIONAL SEAL 13406 ENGINEER JOSEPH T. KELVINGTON
DocuSigned by: Joseph T. Kelvington 847C9D37807744AF...
5/28/2014

U:\Structures\Warner Creek\Drawing\WBL - Bridge 264\Drawing\Final\R-0623_SD_B#2_2.dgn 5/12/2014 5:33:39 PM vdoan