DocuSign Envelope ID: 0467AB1B-32B1-4334-81D0-7D50B5979B14

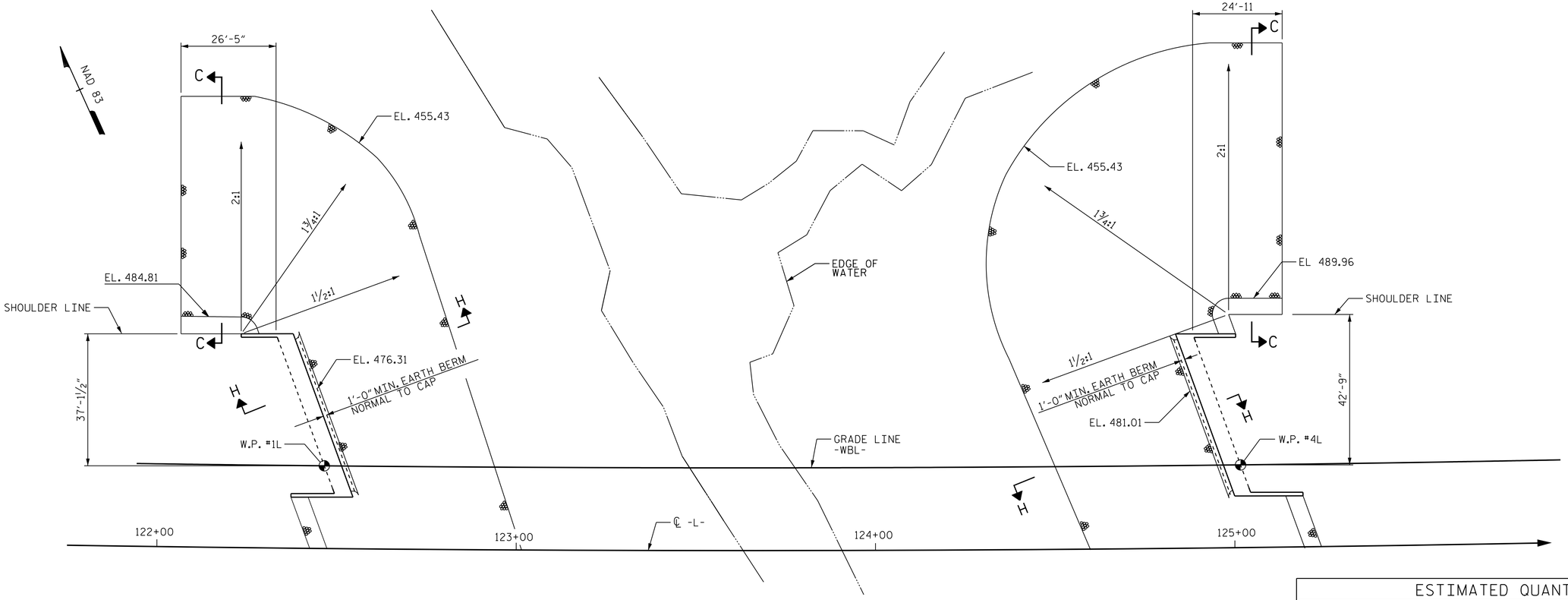

ESTIMATED QUANTITIES		
BRIDGE @ STA. 123+82.50 -L-	RIP RAP CLASS II (2'-0" THICK)	GEOTEXTILE FOR DRAINAGE
	TONS	SQUARE YARDS
END BENT 1	630	700
END BENT 2	931	1035

END BENT 1

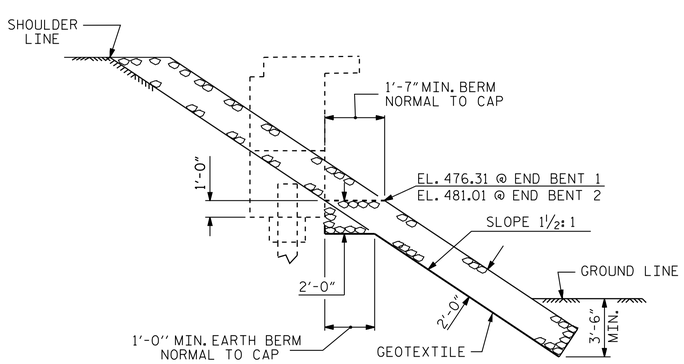

SECTION H-H

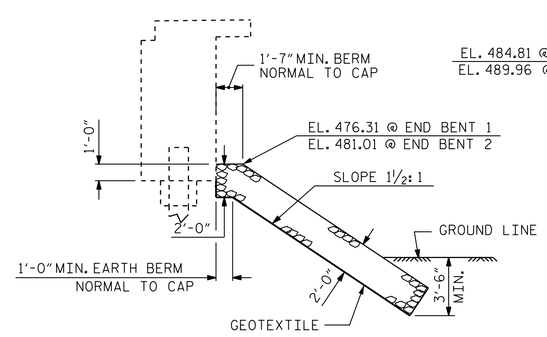

℄ SECTION
BERM RIP RAPPED

END BENT 2

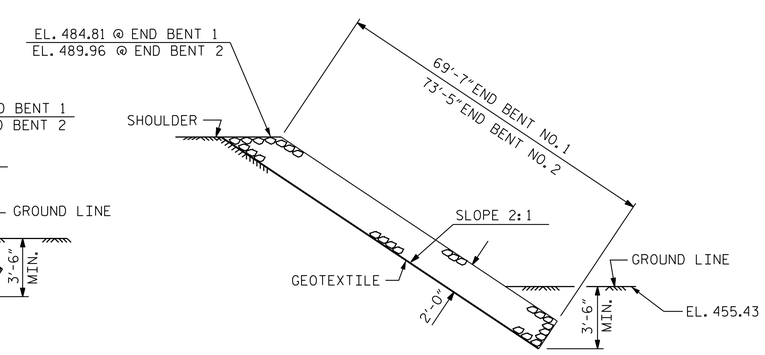

SECTION C-C

PROJECT NO. R-0623
MONTGOMERY COUNTY
STATION: 123+82.50 -L-

STATE OF NORTH CAROLINA
DEPARTMENT OF TRANSPORTATION
RALEIGH

STANDARD

RIP RAP DETAILS

(WBL)

REVISIONS						SHEET NO.
NO.	BY:	DATE:	NO.	BY:	DATE:	S-39
1			3			TOTAL SHEETS
2			4			82

STR. #1

Stantec
Stantec Consulting Services Inc.
801 Jones Franklin Road
Suite 300
Raleigh, NC 27606
Tel. (919) 851-6866
Fax. (919) 851-7024
www.stantec.com
License No. F-0672

DRAWN BY: J. B. GEILE DATE: 02-27-14
CHECKED BY: J. T. KELVINGTON DATE: 03-03-14
DESIGN ENGINEER OF RECORD: J. T. KELVINGTON DATE: 03-11-14

NORTH CAROLINA PROFESSIONAL SEAL 13406 ENGINEER JOSEPH T. KELVINGTON
DocuSigned by: Joseph T. Kelvington 847C9D378077 4AF...
5/28/2014

U:\Structures\Warner Creek\Drawing\WBL - Bridge 264\Drawing\Final\R-0623_SD_RR.dgn 5/12/2014 5:33:44 PM vdoan