DocuSign Envelope ID: 31C928B9-C923-48C2-A4E7-966F51E022C3

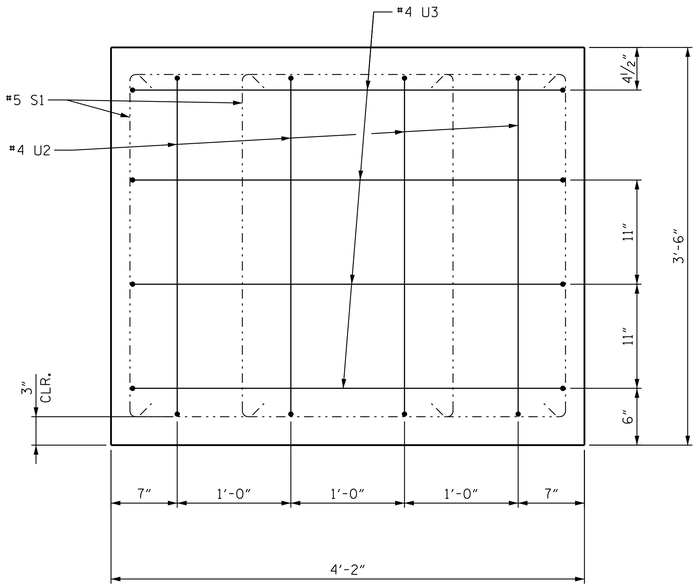

VIEW A-A

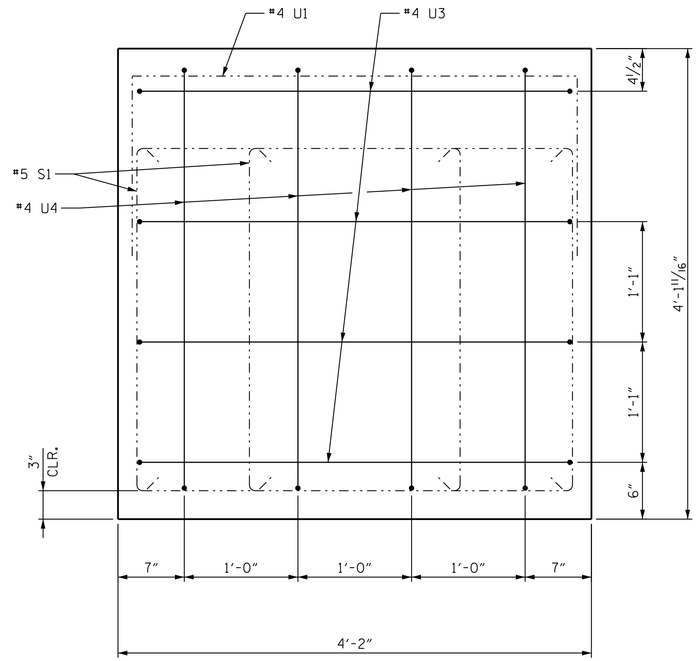

VIEW C-C

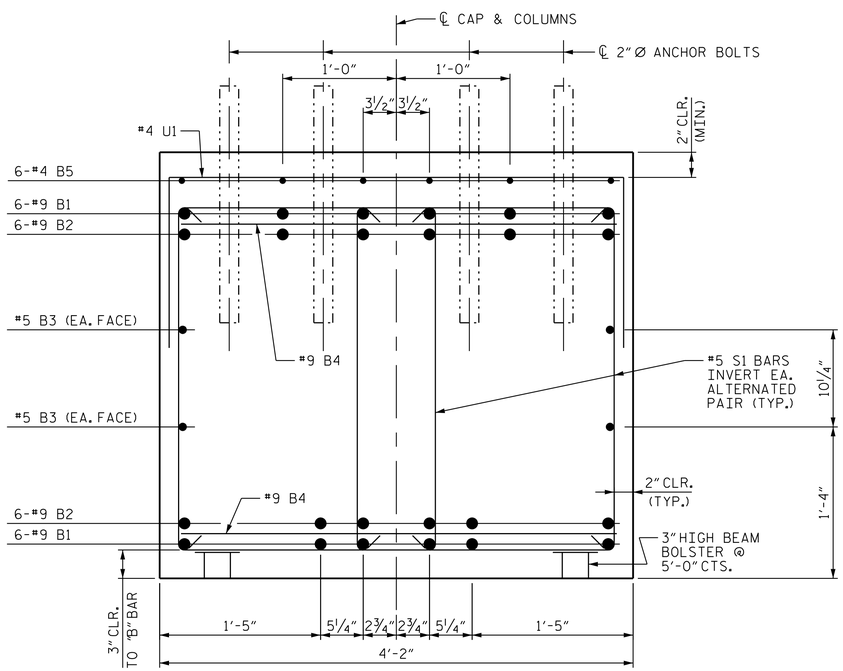

SECTION B-B

BAR TYPES

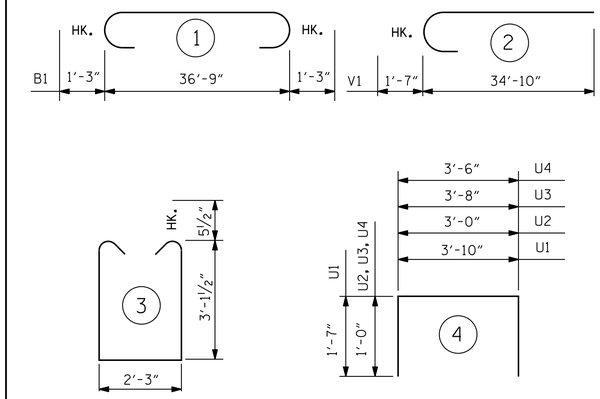

✱✱✱ THE SP-1 SPIRAL REINFORCING STEEL SHALL BE W31 OR D-31 COLD DRAWN WIRE OR #5 PLAIN OR DEFORMED BAR.

✱✱ THE SP-2 SPIRAL REINFORCING STEEL SHALL BE W20 OR D-20 COLD DRAWN WIRE OR #4 PLAIN OR DEFORMED BAR.

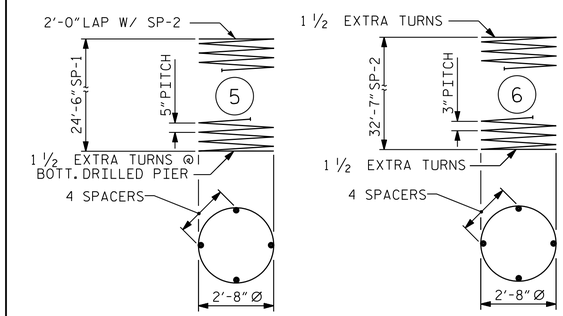

ALL BAR DIMENSIONS ARE OUT TO OUT.

BILL OF MATERIAL

BENT #2

BAR	NO.	SIZE	TYPE	LENGTH	WEIGHT
B1	12	9	1	39'-3"	1601
B2	12	9	STR.	36'-3"	1479
B3	4	5	STR.	36'-9"	153
B4	12	9	STR.	3'-10"	156
B5	6	4	STR.	15'-6"	62
M1	48	11	STR.	34'-11"	8905
S1	92	5	3	9'-5"	904
U1	43	4	4	7'-0"	201
U2	4	4	4	5'-0"	13
U3	8	4	4	5'-8"	30
U4	4	4	4	5'-7"	15
V1	48	11	2	36'-5"	9287
REINFORCING STEEL				LBS.	22806
SP-1	3	***	5	498'-0"	1558
SP-2	3	**	6	1100'-4"	2205
SPIRAL COLUMN					
REINFORCING STEEL				LBS.	3763

DRILLED PIER CONC BREAKDOWN:		
POUR 1 DRILLED PIERS	C.Y.	26.7
3'-6" DIA DRILLED PIERS IN SOIL	LIN.FT.	18.0
3'-6" DIA DRILLED PIERS NOT IN SOIL	LIN.FT.	57.0
CLASS A CONCRETE BREAKDOWN		
POUR #2 COLUMNS	C.Y.	25.3
POUR #3 CAP	C.Y.	21.6
TOTAL CLASS A CONC.	C.Y.	46.9
SID INSPECTIONS	EA.	1
CSL TUBES	LIN.FT.	318.0
CSL TESTING	EA.	1
PERMANENT STEEL CASINGS FOR 3'-6" DIA. DRILLED PIER	LIN.FT.	12.0

PROJECT NO. R-0623

MONTGOMERY COUNTY

STATION: 339+48.56 -L-

SHEET 3 OF 3

STATE OF NORTH CAROLINA
DEPARTMENT OF TRANSPORTATION
RALEIGH

SUBSTRUCTURE

BENT #2

(EBL)

REVISIONS						SHEET NO.
NO.	BY:	DATE:	NO.	BY:	DATE:	S-157
1			3			TOTAL SHEETS
2			4			162

Stantec
Stantec Consulting Services Inc.
801 Jones Franklin Road
Suite 300
Raleigh, NC 27606
Tel. (919) 851-6866
Fax. (919) 851-7024
www.stantec.com
License No. F-0672

DRAWN BY : J. B. GEILE	DATE : 03-20-14	DESIGN ENGINEER OF RECORD: J. T. KELVINGTON	DATE : 04-01-14
CHECKED BY : J. T. KELVINGTON	DATE : 03-31-14		

DocuSigned by: Joseph T. Kelvington 847C9D37807774AF... 5/27/2014

NORTH CAROLINA PROFESSIONAL SEAL 13406 ENGINEER JOSEPH T. KELVINGTON

U:\Structures\Little River\Drawing\EBL - Bridge 32\Final\R-0623_SD_B#_2.3.dgn 5/27/2014 3:48:54 PM jhagenbush