DocuSign Envelope ID: 31C928B9-C923-48C2-A4E7-966F51E022C3

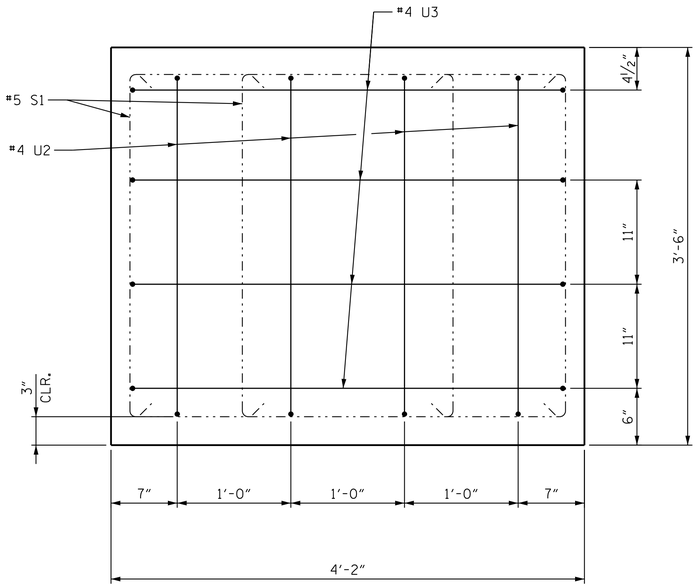

VIEW A-A

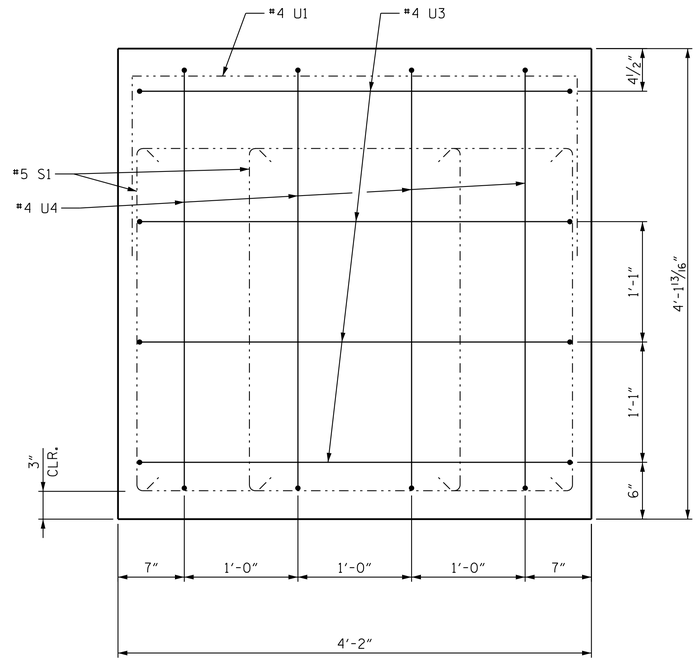

VIEW C-C

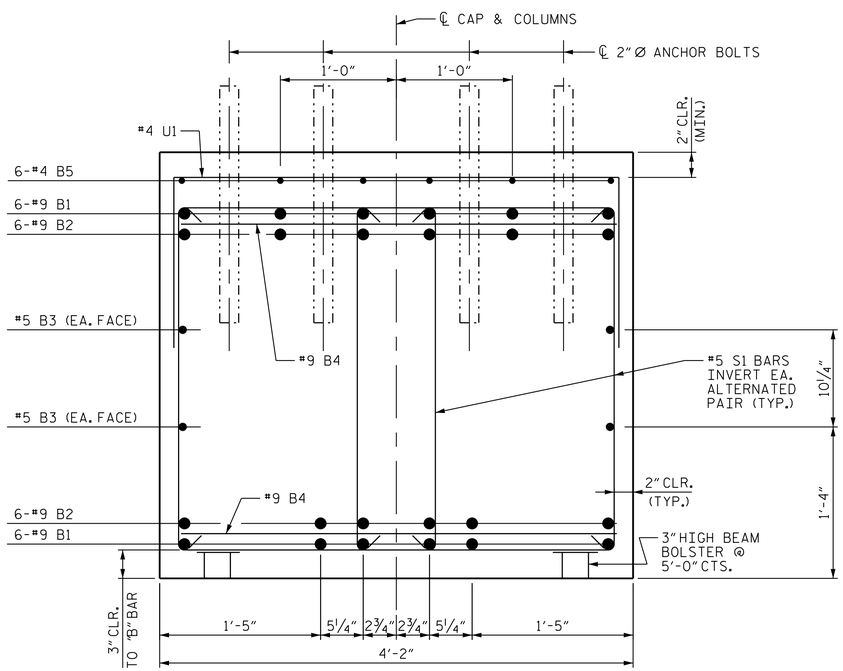

SECTION B-B

BAR TYPES

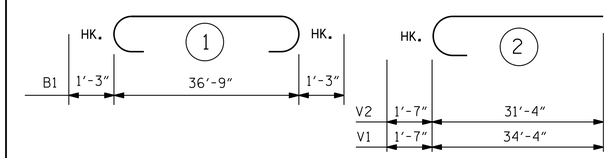

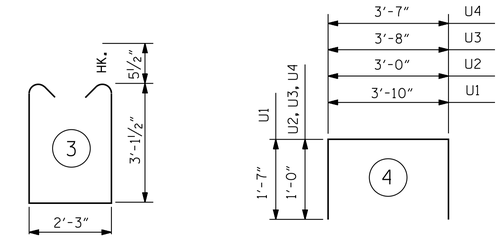

✱✱✱ THE SP-1 & SP-2 SPIRAL REINFORCING STEEL SHALL BE W31 OR D-31 COLD DRAWN WIRE OR #5 PLAIN OR DEFORMED BAR.

✱✱ THE SP-3 & SP-4 SPIRAL REINFORCING STEEL SHALL BE W20 OR D-20 COLD DRAWN WIRE OR #4 PLAIN OR DEFORMED BAR.

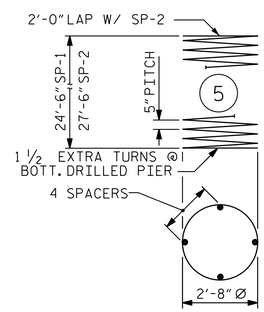

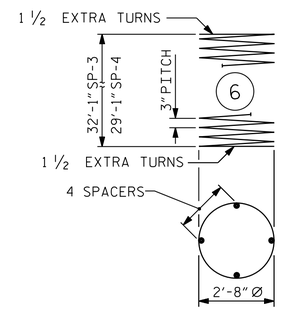

ALL BAR DIMENSIONS ARE OUT TO OUT.

BILL OF MATERIAL

BENT #1

BAR	NO.	SIZE	TYPE	LENGTH	WEIGHT
B1	12	9	1	39'-3"	1601
B2	12	9	STR.	36'-3"	1479
B3	4	5	STR.	36'-9"	153
B4	12	9	STR.	3'-10"	156
B5	6	4	STR.	15'-6"	62
M1	32	11	STR.	34'-11"	5936
M2	16	11	STR.	37'-11"	3223
S1	92	5	3	9'-5"	904
U1	43	4	4	7'-0"	201
U2	4	4	4	5'-0"	13
U3	8	4	4	5'-8"	30
U4	4	4	4	5'-8"	15
V1	32	11	2	35'-11"	6106
V2	16	11	2	32'-11"	2798
REINFORCING STEEL				LBS.	22677
SP-1	2	***	5	498'-0"	1039
SP-2	2	***	5	557'-2"	1162
SP-3	1	**	6	1083'-10"	724
SP-4	1	**	6	984'-10"	658
SPIRAL COLUMN REINFORCING STEEL				LBS.	3583
DRILLED PIER CONC BREAKDOWN:					
POUR 1 DRILLED PIERS				C.Y.	27.8
3'-6" DIA DRILLED PIERS IN SOIL				LIN.FT.	9.0
3'-6" DIA DRILLED PIERS NOT IN SOIL				LIN.FT.	69.0
CLASS A CONCRETE BREAKDOWN					
POUR #2 COLUMNS				C.Y.	24.2
POUR #3 CAP				C.Y.	22.3
TOTAL CLASS A CONC.				C.Y.	46.5
SID INSPECTIONS				EA.	1
CSL TUBES				LIN.FT.	327.0
CSL TESTING				EA.	1
PERMANENT STEEL CASING FOR 3'-6" DIA. DRILLED PIER				LIN.FT.	12.0

PROJECT NO. R-0623

MONTGOMERY COUNTY

STATION: 339+48.56 -L-

SHEET 3 OF 3

STATE OF NORTH CAROLINA
DEPARTMENT OF TRANSPORTATION
RALEIGH

SUBSTRUCTURE

BENT #1

(EBL)

REVISIONS						SHEET NO.
NO.	BY:	DATE:	NO.	BY:	DATE:	S-154
1			3			TOTAL SHEETS
2			4			162

Stantec
Stantec Consulting Services Inc.
801 Jones Franklin Road
Suite 300
Raleigh, NC 27606
Tel. (919) 851-6866
Fax. (919) 851-7024
www.stantec.com
License No. F-0672

DRAWN BY : J. B. GEILE DATE : 03-20-14
CHECKED BY : J. T. KELVINGTON DATE : 03-31-14
DESIGN ENGINEER OF RECORD: J. T. KELVINGTON DATE : 04-01-14

NORTH CAROLINA PROFESSIONAL SEAL 13406 ENGINEER JOSEPH T. KELVINGTON
DocuSigned by: Joseph T. Kelvington 847C9D378077 4AF... 5/27/2014

U:\Structures\Little River\Drawing\EBL - Bridge 32\Final\R-0623_SD_B#_1_3.dgn 5/27/2014 3:48:51PM jhagenbush