DocuSign Envelope ID: 0467AB1B-32B1-4334-81D0-7D50B5979B14

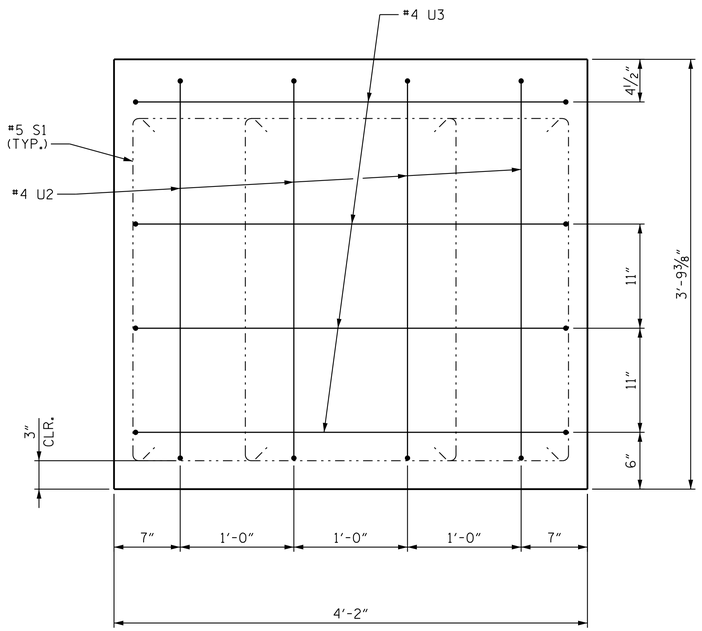

VIEW A-A

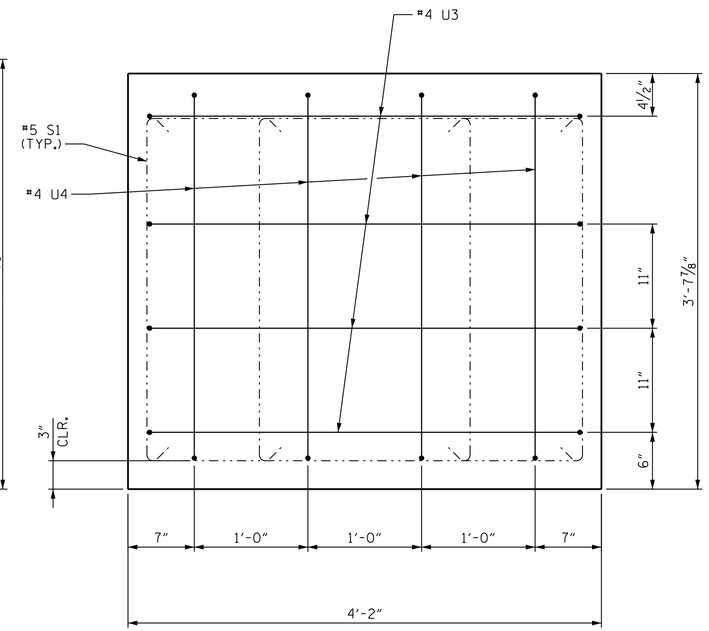

VIEW C-C

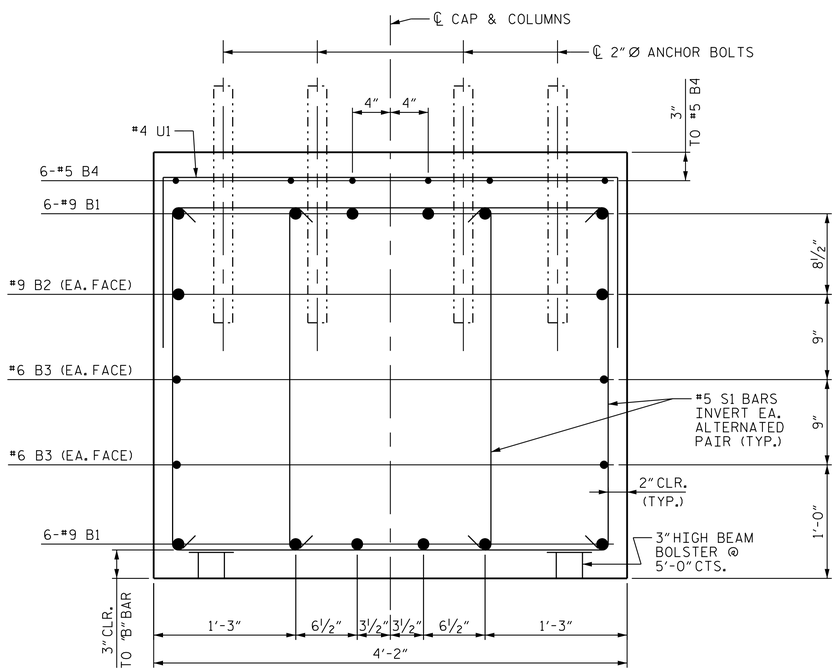

SECTION B-B

BAR TYPES

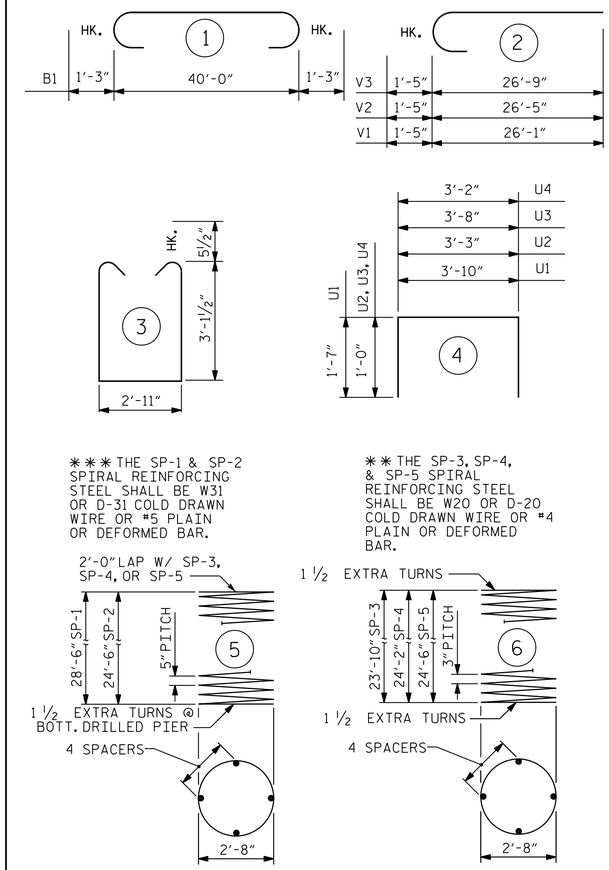

ALL BAR DIMENSIONS ARE OUT TO OUT.

BILL OF MATERIAL

BENT #1

BAR	NO.	SIZE	TYPE	LENGTH	WEIGHT
B1	12	9	1	42'-6"	1734
B2	2	9	STR	39'-6"	269
B3	4	6	STR	40'-0"	240
B4	18	5	STR	4'-5"	83
B5	6	5	STR	5'-0"	31
M1	24	10	STR	37'-7"	3881
M2	12	10	STR	33'-7"	1734
S1	96	5	3	10'-1"	1010
U1	35	4	4	7'-0"	164
U2	4	4	4	5'-3"	14
U3	8	4	4	5'-8"	30
U4	4	4	4	5'-2"	14
V1	12	10	2	27'-6"	1420
V2	12	10	2	27'-10"	1437
V3	12	10	2	28'-2"	1454
REINFORCING STEEL				LBS.	13,515
SP-1	2	✱✱✱	5	576'-11"	1203
SP-2	1	✱✱✱	5	498'-0"	519
SP-3	1	✱✱	6	810'-6"	541
SP-4	1	✱✱	6	822'-4"	549
SP-5	1	✱✱	6	834'-5"	557
SPIRAL COLUMN					
REINFORCING STEEL				LBS.	3,369
DRILLED PIER CONC BREAKDOWN:					
POUR 1 DRILLED PIERS				C.Y.	29.5
3'-6" DIA DRILLED PIERS					
IN SOIL				LIN. FT.	49.0
3'-6" DIA DRILLED PIERS					
NOT IN SOIL				LIN. FT.	34.0
CLASS A CONCRETE BREAKDOWN					
POUR #2 COLUMNS				C.Y.	18.7
POUR #3 CAP				C.Y.	22.8
TOTAL CLASS A CONC.				C.Y.	41.5
SID INSPECTIONS				EA.	1
CSL TUBES				LIN. FT.	362.0
CSL TESTING				EA.	1

PROJECT NO. R-0623

MONTGOMERY COUNTY

STATION: 123+82.50 -L-

SHEET 3 OF 3

STATE OF NORTH CAROLINA
DEPARTMENT OF TRANSPORTATION
RALEIGH

SUBSTRUCTURE

BENT #1

(WBL)

REVISIONS							SHEET NO.
NO.	BY:	DATE:	NO.	BY:	DATE:		S-33
1			3				TOTAL SHEETS
2			4				82

Stantec
Stantec Consulting Services Inc.
801 Jones Franklin Road
Suite 300
Raleigh, NC 27606
Tel. (919) 851-6866
Fax. (919) 851-7024
www.stantec.com
License No. F-0672

DRAWN BY : J. L. HENNEKES DATE : 03-06-14
CHECKED BY : J. T. KELVINGTON DATE : 03-11-14

DESIGN ENGINEER OF RECORD: J. T. KELVINGTON DATE : 03-11-14

NORTH CAROLINA PROFESSIONAL SEAL 13406 ENGINEER JOSEPH T. KELVINGTON
DocuSigned by: Joseph T. Kelvington 847C9D378077 4AF... 5/28/2014

STR. #1

U:\Structures\Warner Creek\Drawing\WBL - Bridge 264\Drawing\Final\R-0623_SD_B#1_3.dgn 5/12/2014 5:33:37 PM vdoan