DocuSign Envelope ID: E6618080-E6D8-467D-B842-BC4A0736B9E5

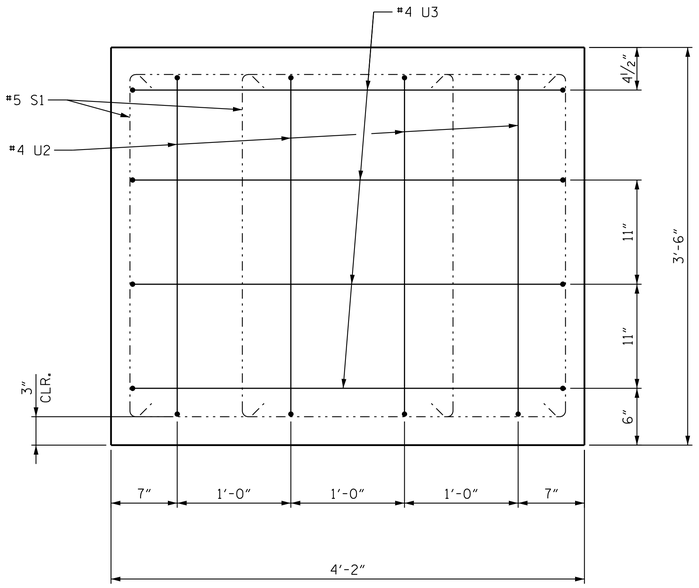

VIEW A-A

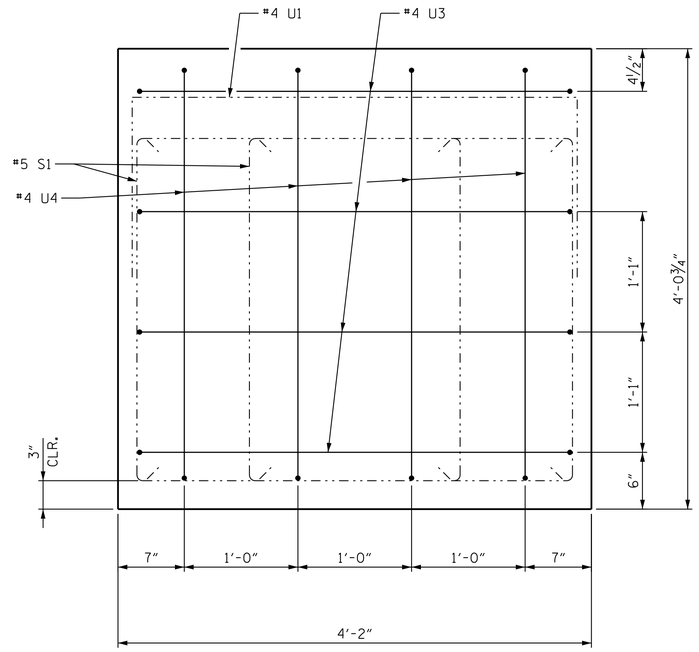

VIEW C-C

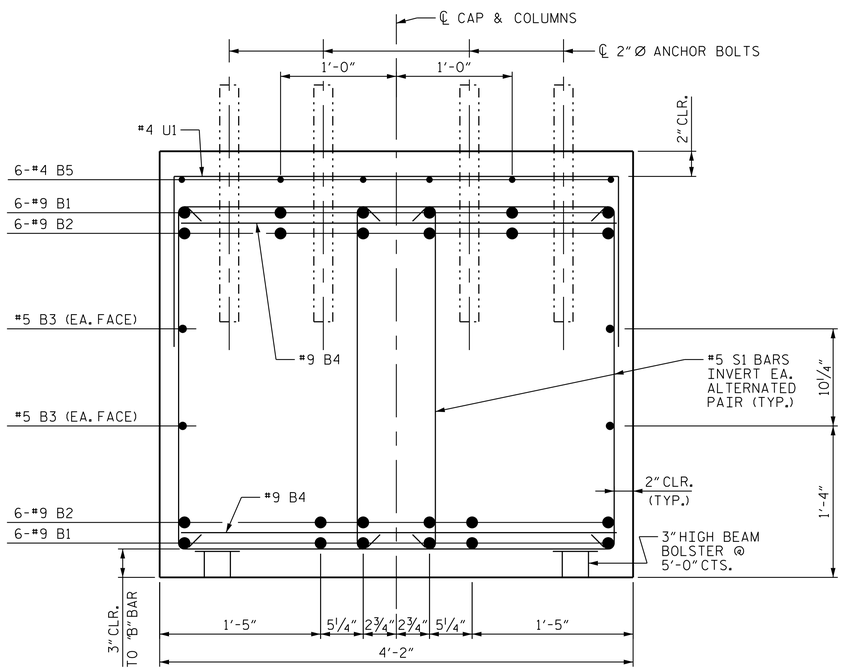

SECTION B-B

BAR TYPES

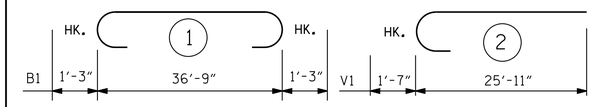

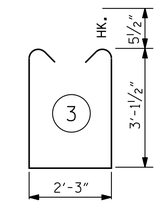

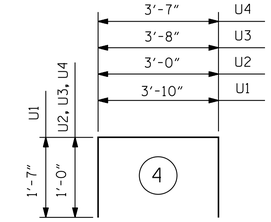

✱✱✱ THE SP-1 SPIRAL REINFORCING STEEL SHALL BE W31 OR D-31 COLD DRAWN WIRE OR #5 PLAIN OR DEFORMED BAR.

✱✱ THE SP-2 SPIRAL REINFORCING STEEL SHALL BE W20 OR D-20 COLD DRAWN WIRE OR #4 PLAIN OR DEFORMED BAR.

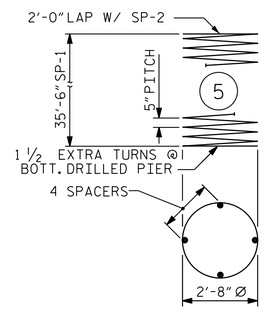

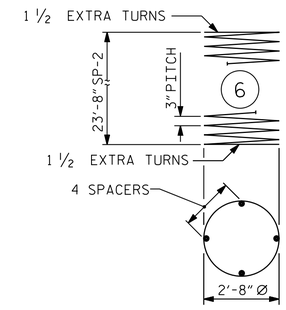

ALL BAR DIMENSIONS ARE OUT TO OUT.

BILL OF MATERIAL

BENT #2

BAR	NO.	SIZE	TYPE	LENGTH	WEIGHT
B1	12	9	1	39'-3"	1601
B2	12	9	STR.	36'-3"	1479
B3	4	5	STR.	36'-9"	153
B4	12	9	STR.	3'-10"	156
B5	6	4	STR.	15'-6"	62
M1	48	11	STR.	45'-11"	11710
S1	92	5	3	9'-5"	904
U1	43	4	4	7'-0"	201
U2	4	4	4	5'-0"	13
U3	8	4	4	5'-8"	30
U4	4	4	4	5'-7"	15
V1	48	11	2	27'-6"	7013
REINFORCING STEEL				LBS.	23337
SP-1	3	***	5	715'-1"	2237
SP-2	3	**	6	806'-11"	1617
SPIRAL COLUMN					
REINFORCING STEEL				LBS.	3854
DRILLED PIER CONC BREAKDOWN:					
POUR 1 DRILLED PIERS				C. Y.	38.5
3'-6" DIA DRILLED PIERS					
IN SOIL				LIN. FT.	60.0
3'-6" DIA DRILLED PIERS					
NOT IN SOIL				LIN. FT.	48.0
CLASS A CONCRETE BREAKDOWN					
POUR #2 COLUMNS				C. Y.	18.4
POUR #3 CAP				C. Y.	21.5
TOTAL CLASS A CONC.				C. Y.	39.9
SID INSPECTIONS				EA.	1
CSL TUBES				LIN. FT.	447.0
CSL TESTING				EA.	1

PROJECT NO. R-0623

MONTGOMERY COUNTY

STATION: 339+48.56 -L-

SHEET 3 OF 3

STATE OF NORTH CAROLINA
DEPARTMENT OF TRANSPORTATION
RALEIGH

SUBSTRUCTURE

BENT #2

(WBL)

REVISIONS						SHEET NO.
NO.	BY:	DATE:	NO.	BY:	DATE:	S-117
1			3			TOTAL SHEETS
2			4			162

NORTH CAROLINA PROFESSIONAL SEAL 13406 ENGINEER JOSEPH T. KELVINGTON

DocuSigned by: Joseph T. Kelvington 847C9D37807744AF... 5/27/2014

Stantec
Stantec Consulting Services Inc.
801 Jones Franklin Road
Suite 300
Raleigh, NC 27606
Tel. (919) 851-6866
Fax. (919) 851-7024
www.stantec.com
License No. F-0672

DRAWN BY : J. B. GEILE DATE : 03-20-14
CHECKED BY : V. T. DOAN DATE : 03-31-14
DESIGN ENGINEER OF RECORD: J. T. KELVINGTON DATE : 04-01-14

U:\Structures\Little River\Drawing\WBL - Bridge 266\Final\R-0623_SD_B#_2_3.dgn 5/27/2014 3:55:16 PM jhagenbush