DocuSign Envelope ID: 31C928B9-C923-48C2-A4E7-966F51E022C3

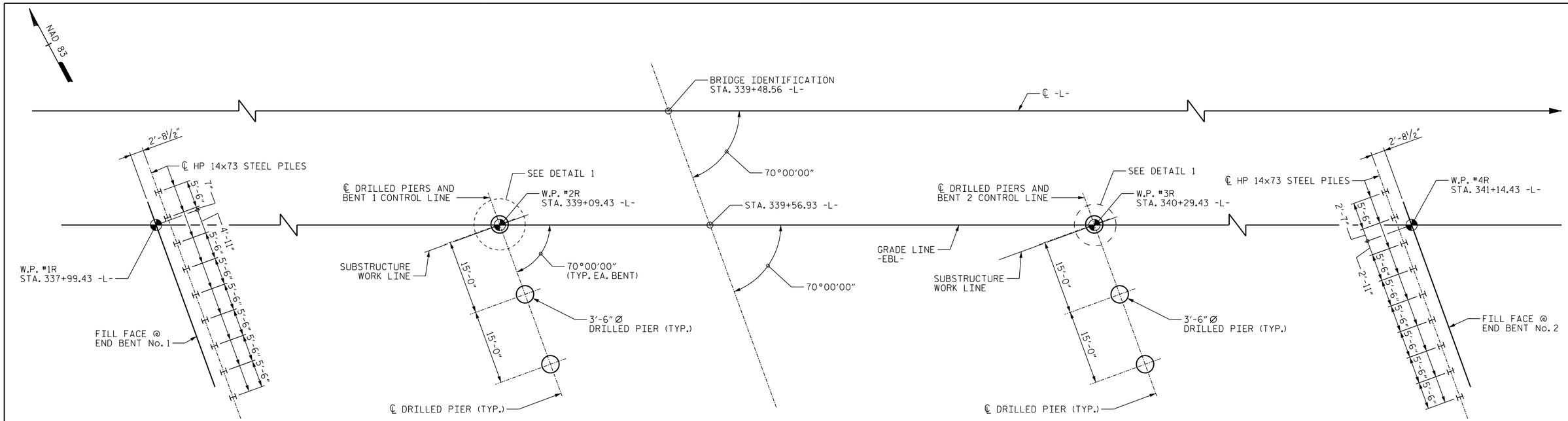

END BENT 1 | BENT No. 1 | BENT No. 2 | END BENT 2

FOUNDATION LAYOUT PLAN

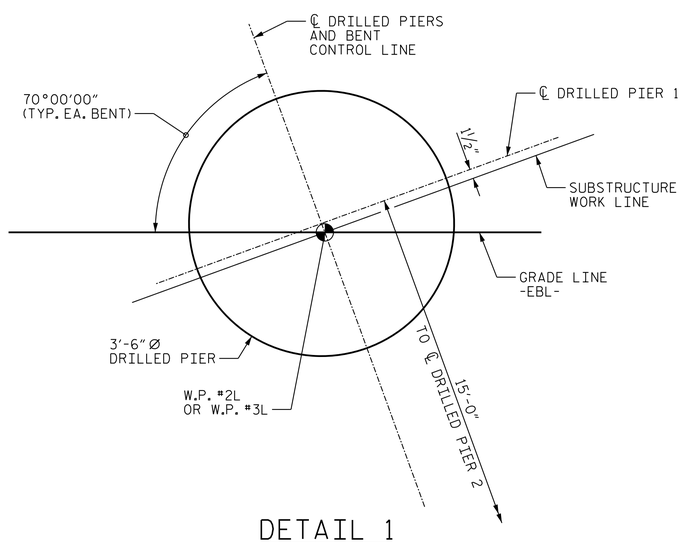

DETAIL 1

NOTES:

OBSERVE A 5 MONTH WAITING PERIOD AFTER CONSTRUCTING THE EMBANKMENT TO WITHIN 2 FT OF FINISHED GRADE BEFORE BEGINNING END BENT CONSTRUCTION AT END BENTS NO. 1 AND 2.

FOR PILES, SEE SECTION 450 OF THE STANDARD SPECIFICATIONS.

PILES AT END BENTS NO. 1 AND 2 ARE DESIGNED FOR A FACTORED RESISTANCE OF 135 TONS PER PILE.

DRIVE PILES AT END BENTS NO. 1 AND 2 TO A REQUIRED DRIVING RESISTANCE OF 225 TONS PER PILE.

STEEL H-PILE POINTS ARE REQUIRED FOR STEEL H-PILES AT END BENTS NO. 1 AND 2. FOR STEEL PILE POINTS, SEE SECTION 450 OF THE STANDARD SPECIFICATIONS.

IT HAS BEEN ESTIMATED THAT A HAMMER WITH AN EQUIVALENT RATED ENERGY IN THE RANGE OF 45 TO 60 FT-KIPS PER BLOW WILL BE REQUIRED TO DRIVE PILES AT END BENTS NO. 1 AND 2. THIS ESTIMATED ENERGY RANGE DOES NOT RELEASE THE CONTRACTOR FROM PROVIDING DRIVING EQUIPMENT IN ACCORDANCE WITH SUBARTICLE 450-3(D)(2) OF THE STANDARD SPECIFICATIONS.

FOR DRILLED PIERS, SEE SECTION 411 OF THE STANDARD SPECIFICATIONS.

DRILLED PIERS AT BENTS NO. 1 AND 2 ARE DESIGNED FOR A FACTORED RESISTANCE OF 580 TONS AND 540 TONS PER PIER, RESPECTIVELY. CHECK FIELD CONDITIONS FOR THE REQUIRED TIP RESISTANCE OF 25 TSF.

PERMANENT STEEL CASINGS MAY BE REQUIRED FOR DRILLED PIERS AT BENT NO. 1. IF REQUIRED, DO NOT EXTEND PERMANENT CASINGS BELOW ELEVATION 371 FT WITHOUT PRIOR APPROVAL FROM THE ENGINEER. THE ENGINEER WILL DETERMINE THE NEED FOR PERMANENT CASINGS.

PERMANENT STEEL CASINGS ARE REQUIRED FOR DRILLED PIERS AT BENT NO. 2. DO NOT EXTEND PERMANENT CASINGS BELOW ELEVATION 368 FT WITHOUT PRIOR APPROVAL FROM THE ENGINEER.

INSTALL DRILLED PIERS AT BENTS NO. 1 AND 2 TO A TIP ELEVATION NO HIGHER THAN 348 FT AND 347 FT, RESPECTIVELY, AND WITH THE REQUIRED TIP RESISTANCE.

SID INSPECTIONS MAY BE REQUIRED FOR DRILLED PIERS. THE ENGINEER WILL DETERMINE THE NEED FOR SID INSPECTIONS. FOR SID INSPECTIONS, SEE SECTION 411 OF THE STANDARD SPECIFICATIONS.

CSL TUBES ARE REQUIRED AND CSL TESTING MAY BE REQUIRED FOR DRILLED PIERS. THE ENGINEER WILL DETERMINE THE NEED FOR CSL TESTING. FOR CSL TESTING, SEE SECTION 411 OF THE STANDARD SPECIFICATIONS.

THE SCOUR CRITICAL ELEVATIONS FOR BENTS NO. 1 AND 2 ARE 370 FT AND 367 FT, RESPECTIVELY. SCOUR CRITICAL ELEVATIONS ARE USED TO MONITOR POSSIBLE SCOUR PROBLEMS DURING THE LIFE OF THE STRUCTURE.

PROJECT NO. R-0623
MONTGOMERY COUNTY
STATION: 339+48.56 -L-

SHEET 2 OF 3

STATE OF NORTH CAROLINA
DEPARTMENT OF TRANSPORTATION
RALEIGH

GENERAL DRAWING

FOR BRIDGE ON NC 24/27 BYPASS EBL
OVER LITTLE RIVER
BETWEEN SR 1324 AND SR 1381

(EBL)

REVISIONS						SHEET NO.
NO.	BY:	DATE:	NO.	BY:	DATE:	S-124
1			3			TOTAL SHEETS
2			4			162

NORTH CAROLINA PROFESSIONAL SEAL 13406 ENGINEER JOSEPH T. KELVINGTON
DocuSigned by: Joseph T. Kelvington 847C9D378074AF...
5/27/2014

Stantec
Stantec Consulting Services Inc.
801 Jones Franklin Road
Suite 300
Raleigh, NC 27606
Tel. (919) 851-6866
Fax. (919) 851-7024
www.stantec.com
License No. F-0672

DRAWN BY : J. L. HENNEKES DATE : 03-27-14
CHECKED BY : J. T. KELVINGTON DATE : 03-31-14
DESIGN ENGINEER OF RECORD: J. T. KELVINGTON DATE : 04-01-14

U:\Structures\Little River\Drawing\EBL - Bridge 32\Final\R-0623_SD_FL.dgn 5/27/2014 3:47:58 PM jhagenbush

STR. #4