DocuSign Envelope ID: E6618080-E6D8-467D-B842-BC4A0736B9E5

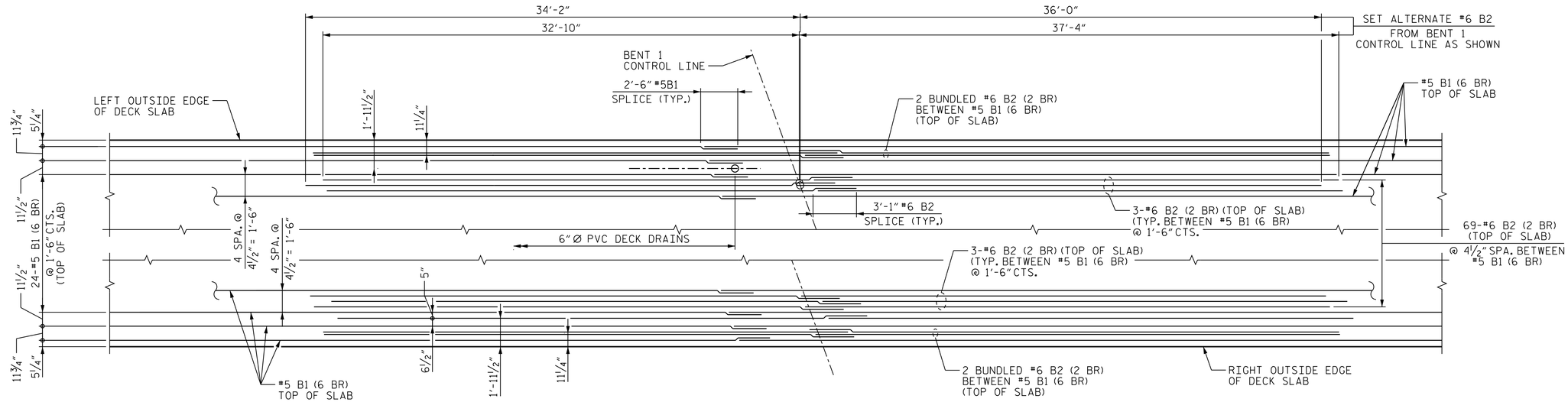

B1 AND B2 BAR PLACEMENT DETAIL @ INTERIOR BENT 1

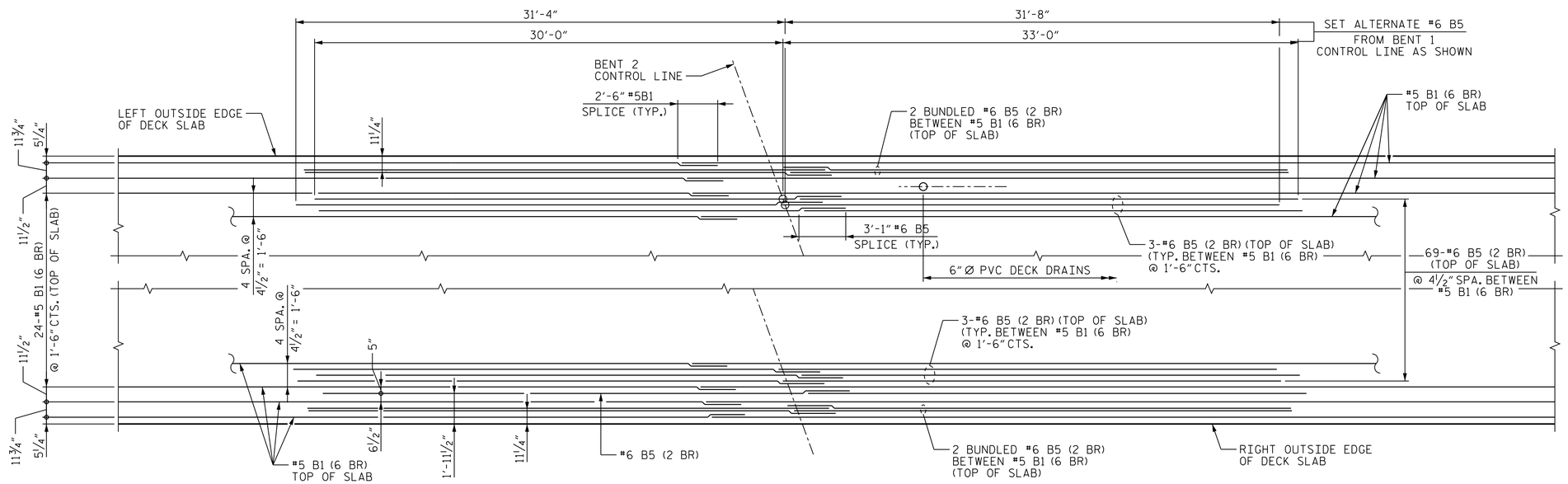

B1 AND B5 BAR PLACEMENT DETAIL @ INTERIOR BENT 2

PROJECT NO. R-0623

MONTGOMERY COUNTY

STATION: 339+48.56 -L-

SHEET 4 OF 4

STATE OF NORTH CAROLINA
DEPARTMENT OF TRANSPORTATION
RALEIGH

SUPERSTRUCTURE

PLAN OF SPAN DETAILS

(WBL)

REVISIONS						SHEET NO.
NO.	BY:	DATE:	NO.	BY:	DATE:	S-93
1			3			TOTAL SHEETS
2			4			162

Stantec
Stantec Consulting Services Inc.
801 Jones Franklin Road
Suite 300
Raleigh, NC 27606
Tel. (919) 851-6866
Fax. (919) 851-7024
www.stantec.com
License No. F-0672

DRAWN BY : J. L. HENNEKES DATE : 03-21-14
CHECKED BY : J. T. KELVINGTON DATE : 03-24-14

DESIGN ENGINEER OF RECORD: J. T. KELVINGTON DATE : 04-01-14

NORTH CAROLINA PROFESSIONAL SEAL 13406 ENGINEER JOSEPH T. KELVINGTON
DocuSigned by: Joseph T. Kelvington 847C9D3780774AF...
5/27/2014

STR. #3

U:\Structures\Little River\Drawing\WBL - Bridge 266\Final\R-0623_SD_S*_4.dgn 5/27/2014 3:54:33 PM jhagenbush