DocuSign Envelope ID: 0467AB1B-32B1-4334-81D0-7D50B5979B14

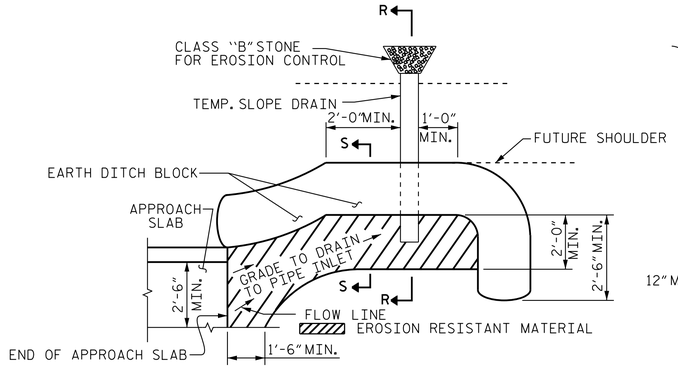

NOTE: IMMEDIATELY AFTER THE CONSTRUCTION OF THE APPROACH SLAB, THE CONTRACTOR SHALL PROVIDE TEMPORARY BERM AND SLOPE DRAIN. CONTRACTOR SHALL GRADE TO PIPE INLET AND PROVIDE EROSION RESISTANT MATERIAL AS SHOWN. THE EROSION RESISTANT MATERIAL SHALL BE EITHER 1) ASPHALT PLANT MIX, TYPE 1 OR TYPE 2, MIN. 2" DEPTH, 2) EROSION CONTROL MAT, OR 3) CONCRETE, AS DIRECTED BY THE ENGINEER. THE SLOPE DRAIN SHALL CONSIST OF A NON-PERFORATED TEMPORARY DRAINAGE PIPE, 12 INCHES IN DIAMETER.

PLAN VIEW

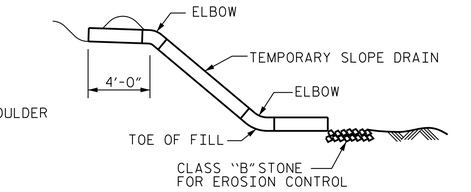

SECTION R-R

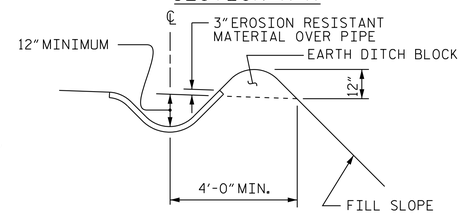

SECTION S-S

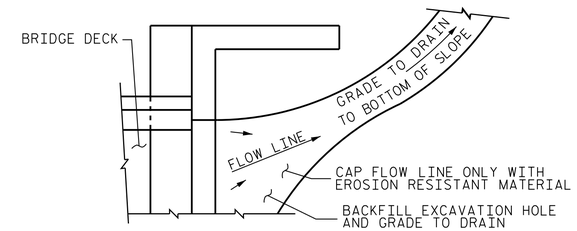

NOTE: IF THE APPROACH SLAB IS NOT CONSTRUCTED IMMEDIATELY AFTER THE BACKFILLING OF THE END BENT EXCAVATION, GRADE TO DRAIN TO THE BOTTOM OF THE SLOPE AND PROVIDE EROSION RESISTANT MATERIAL, SUCH AS FIBERGLASS ROVING OR AS DIRECTED BY THE ENGINEER TO PREVENT SOIL EROSION AND TO PROTECT THE AREA ADJACENT TO THE STRUCTURE. THE CONTRACTOR WILL BE REQUIRED TO REMOVE THESE MATERIALS PRIOR TO CONSTRUCTION OF THE APPROACH SLAB.

TEMPORARY DRAINAGE DETAIL

TEMPORARY BERM AND SLOPE DRAIN DETAILS

(TO BE USED WHEN SHOULDER BERM GUTTER IS REQUIRED)

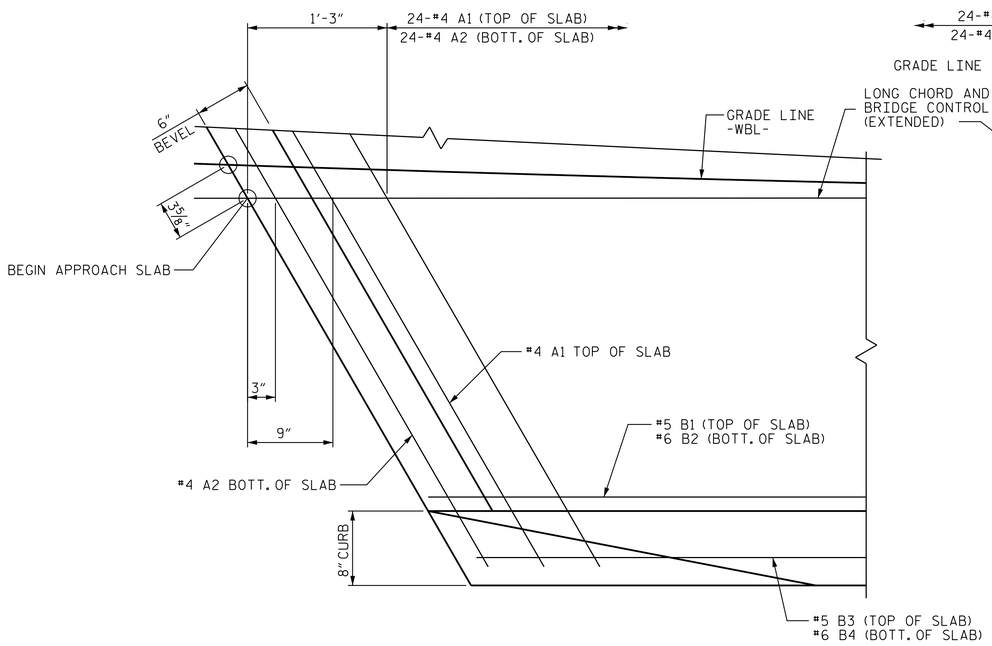

CONTROL POINT LAYOUT @ END BENT 1

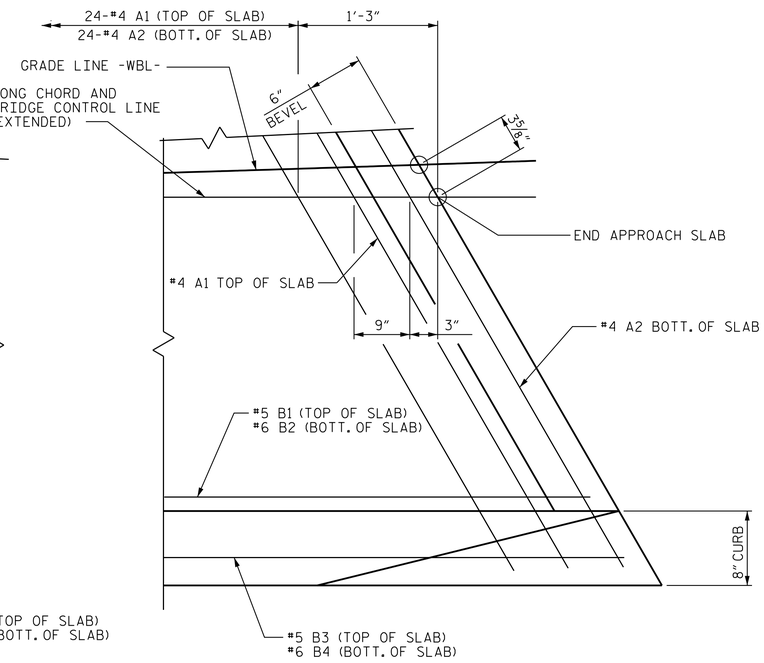

CONTROL POINT LAYOUT @ END BENT 2

PROJECT NO. R-0623

MONTGOMERY COUNTY

STATION: 123+82.50 -L-

SHEET 2 OF 2

STATE OF NORTH CAROLINA
DEPARTMENT OF TRANSPORTATION
RALEIGH

STANDARD

BRIDGE APPROACH
SLAB DETAILS

(WBL)

REVISIONS						SHEET NO.
NO.	BY:	DATE:	NO.	BY:	DATE:	S-41
1			3			TOTAL SHEETS
2			4			82

STR. #1 STD. NO. BAS4

Stantec
Stantec Consulting Services Inc.
801 Jones Franklin Road
Suite 300
Raleigh, NC 27606
Tel. (919) 851-6866
Fax. (919) 851-7024
www.stantec.com
License No. F-0672

ASSEMBLED BY : J. B. GEILE DATE : 11/25/13
CHECKED BY : T. R. DUDECK DATE : 11/25/13

DRAWN BY : FCJ 11/88
CHECKED BY : ARB 11/88

REV. 10/1/11 MAA/GM
REV. 7/12 MAA/GM
REV. 6/13 MAA/GM

DESIGN ENGINEER OF RECORD: J. T. KELVINGTON DATE : 03-11-14

NORTH CAROLINA PROFESSIONAL SEAL 13406 ENGINEER JOSEPH T. KELVINGTON

DocuSigned by: Joseph T. Kelvington 847C9D37B0774AF... 5/28/2014

U:\Structures\Warner Creek\Drawing\WBL - Bridge 264\Drawing\Final\R-0623_SD_AS_2.dgn 5/12/2014 5:33:47 PM vdoan