DocuSign Envelope ID: 31C928B9-C923-48C2-A4E7-966F51E022C3

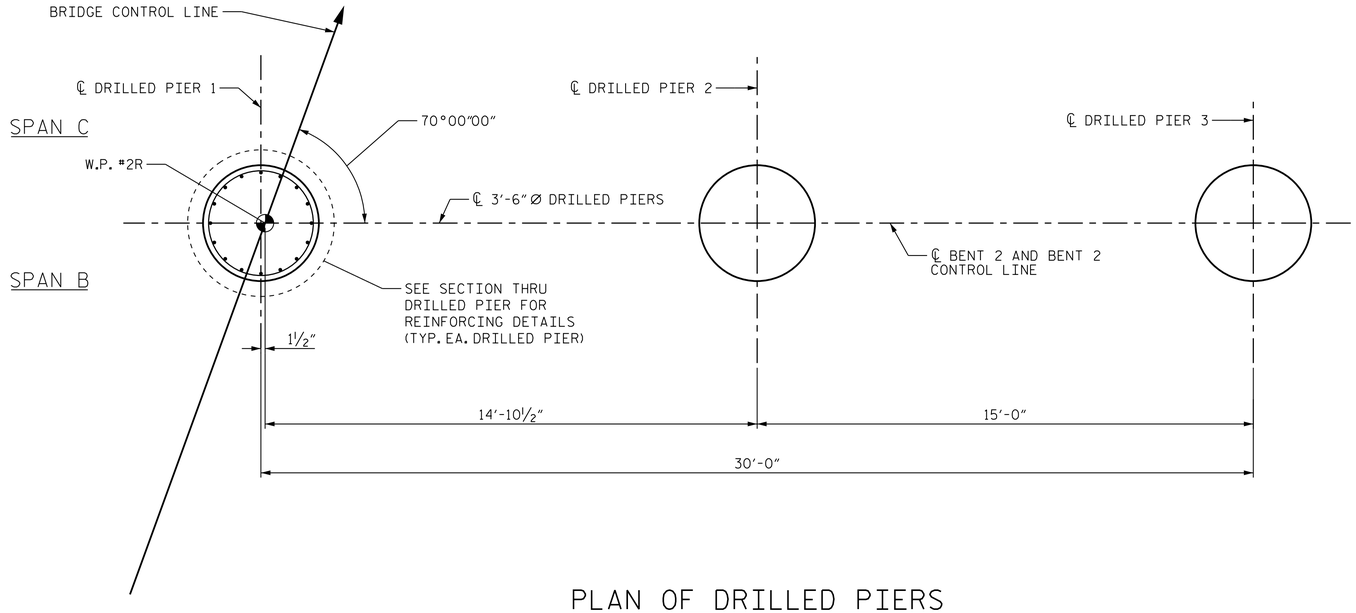

PLAN OF DRILLED PIERS

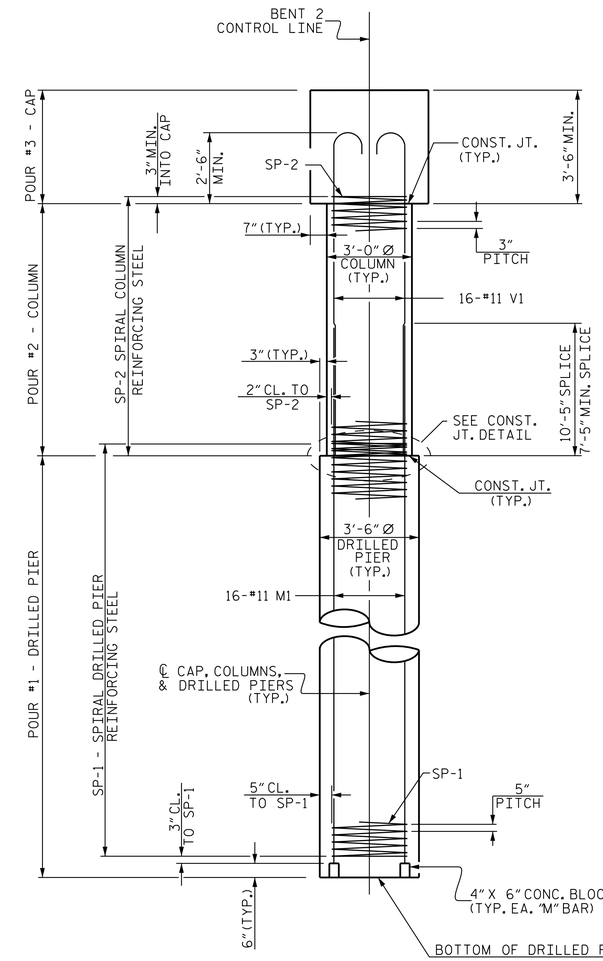

END ELEVATION

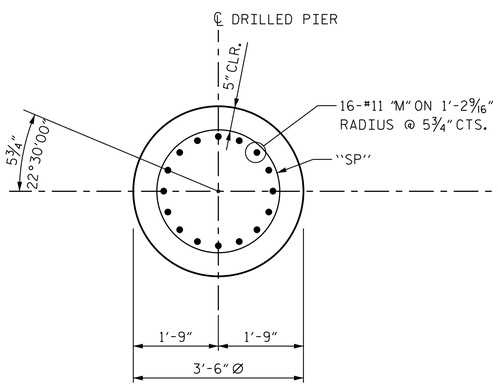

SECTION THRU DRILLED PIER
TYPICAL ALL DRILLED PIERS

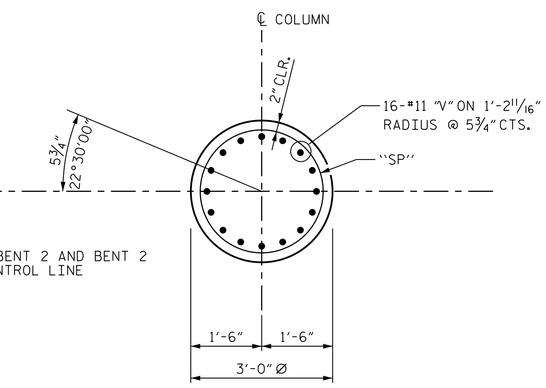

SECTION THRU COLUMN
TYPICAL ALL COLUMNS

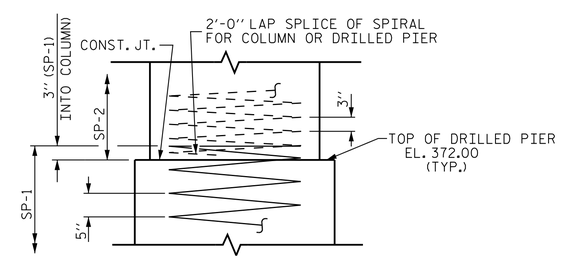

CONSTRUCTION JOINT DETAIL

PROJECT NO. R-0623

MONTGOMERY COUNTY

STATION: 339+48.56 -L-

SHEET 2 OF 3

STATE OF NORTH CAROLINA
DEPARTMENT OF TRANSPORTATION
RALEIGH

SUBSTRUCTURE

BENT #2

(EBL)

REVISIONS						SHEET NO.
NO.	BY:	DATE:	NO.	BY:	DATE:	S-156
1			3			TOTAL SHEETS
2			4			162

Stantec
Stantec Consulting Services Inc.
801 Jones Franklin Road
Suite 300
Raleigh, NC 27606
Tel. (919) 851-6866
Fax. (919) 851-7024
www.stantec.com
License No. F-0672

DRAWN BY : J. B. GEILE DATE : 03-20-14
CHECKED BY : J. T. KELVINGTON DATE : 03-31-14
DESIGN ENGINEER OF RECORD: J. T. KELVINGTON DATE : 04-01-14

NORTH CAROLINA PROFESSIONAL SEAL 13406 ENGINEER JOSEPH T. KELVINGTON 2014

DocuSigned by: Joseph T. Kelvington
847C9D378077 4AF...

STR. #4

U:\Structures\Little River\Drawing\EBL - Bridge 32\Final\R-0623_SD_B#_2_2.dgn 5/27/2014 3:48:53 PM jhagenbush