DocuSign Envelope ID: 31C928B9-C923-48C2-A4E7-966F51E022C3

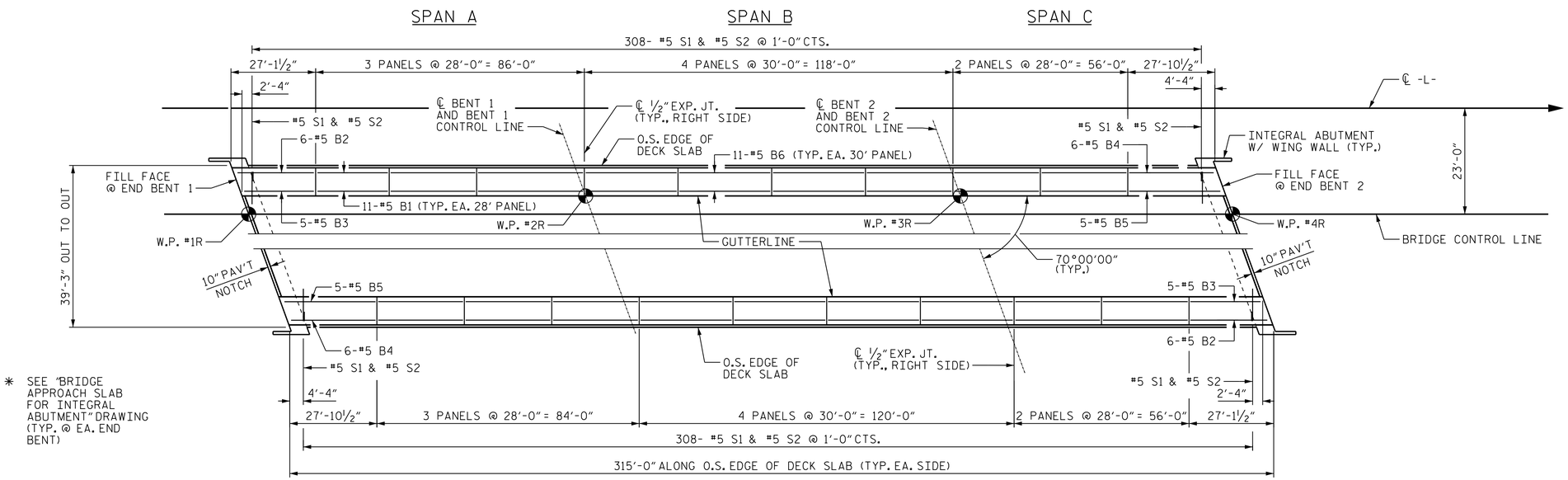

✱ SEE "BRIDGE APPROACH SLAB FOR INTEGRAL ABUTMENT" DRAWING (TYP. @ EA. END BENT)

BAR TYPES

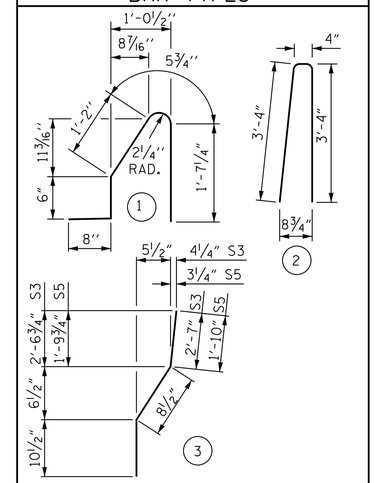

ALL BAR DIMENSIONS ARE OUT TO OUT

BILL OF MATERIAL

FOR CONCRETE BARRIER RAIL ONLY

BAR	NO.	SIZE	TYPE	LENGTH	WEIGHT
✱ B1	110	#5	STR	27'-7"	3165
✱ B2	12	#5	STR	26'-7"	333
✱ B3	10	#5	STR	26'-3"	274
✱ B4	12	#5	STR	27'-6"	344
✱ B5	10	#5	STR	27'-11"	291
✱ B6	88	#5	STR	29'-7"	2715
✱ S1	616	#5	1	4'-5"	2838
✱ S2	616	#5	2	7'-0"	4497
✱ S3	4	#5	3	4'-2"	17
✱ S4	4	#5	STR	4'-0"	17
✱ S5	8	#5	3	3'-5"	29
✱ S6	8	#5	STR	3'-3"	27
✱ EPOXY COATED REINFORCING STEEL					14547 LBS.
CLASS AA CONCRETE					85.4 CU. YDS.
CONCRETE BARRIER RAIL					630.0 LIN. FT.

NOTES

CONCRETE BARRIER RAIL IN A CONTINUOUS UNIT SHALL NOT BE CAST UNTIL ALL SLAB CONCRETE IN THE UNIT HAS BEEN CAST AND HAS REACHED A MINIMUM COMPRESSIVE STRENGTH OF 3,000 PSI.

WHEN FOAM JOINT SEAL IS REQUIRED, THE JOINT IN THE DECK SHALL BE SAWED PRIOR TO THE CASTING OF BARRIER RAIL.

ALL REINFORCING STEEL IN BARRIER RAILS SHALL BE EPOXY COATED.

THE #5 S3, S4, S5 AND S6 BARS SHALL BE INSTALLED, USING AN ADHESIVE ANCHORING SYSTEM, AFTER SAWING THE JOINT. THE YIELD LOAD FOR THE #5 S3, S4, S5 AND S6 BARS IS 18.6 KIPS. FIELD TESTING FOR THE ADHESIVE BONDING SYSTEM IS NOT REQUIRED.

GROOVED CONTRACTION JOINTS, ½" IN DEPTH, SHALL BE TOOLED IN ALL EXPOSED FACES OF THE BARRIER RAIL AND IN ACCORDANCE WITH ARTICLE 825-10(B) OF THE STANDARD SPECIFICATIONS. THE CONTRACTION JOINT SHALL BE LOCATED AT EACH THIRD POINT BETWEEN BARRIER RAIL EXPANSION JOINTS. ONLY ONE CONTRACTION JOINT IS REQUIRED AT MIDPOINT OF BARRIER RAIL SEGMENTS LESS THAN 20 FEET IN LENGTH AND NO CONTRACTION JOINTS ARE REQUIRED FOR THOSE SEGMENTS LESS THAN 10 FEET IN LENGTH.

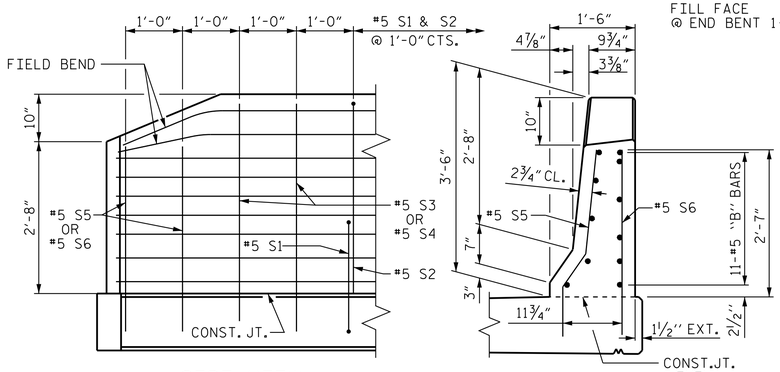

SIDE VIEW

END VIEW

END OF RAIL DETAILS

BARRIER RAIL PLAN

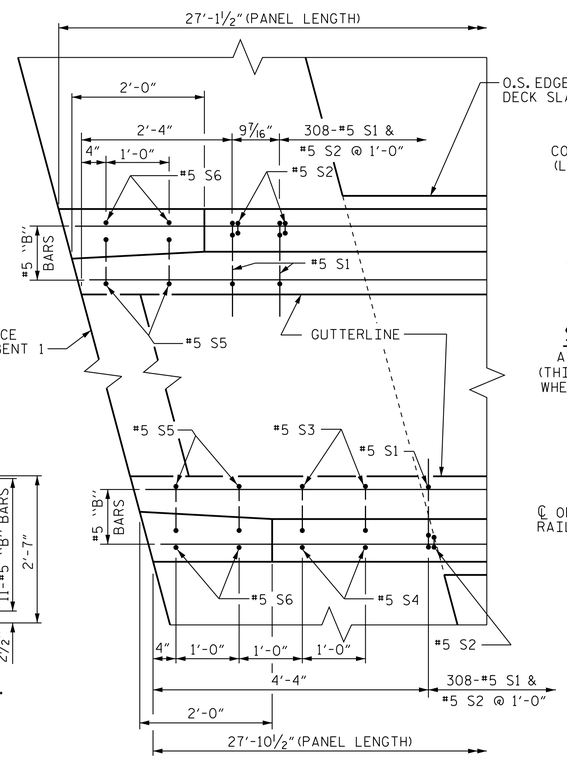

PLAN

DETAIL @ END BENT

END BENT 1 SHOWN END BENT 2 TYP. BY ROTATION

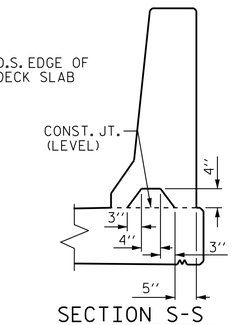

SECTION S-S

AT DAM IN OPEN JOINT (THIS IS TO BE USED ONLY WHEN SLIP FORM IS USED)

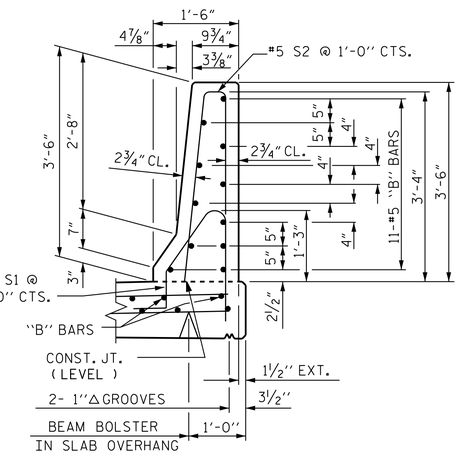

SECTION THRU RAIL

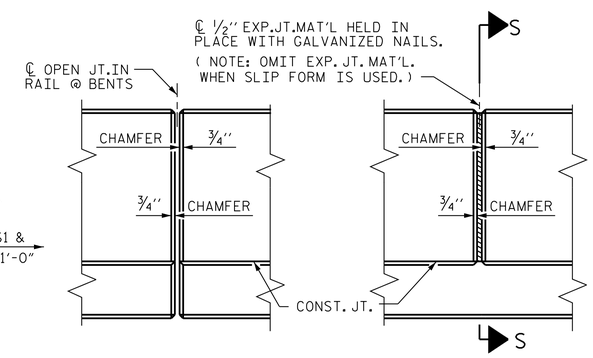

ELEVATION AT EXPANSION JOINTS

BARRIER RAIL DETAILS

PROJECT NO. R-0623

MONTGOMERY COUNTY

STATION: 339+48.56 -L-

STATE OF NORTH CAROLINA
DEPARTMENT OF TRANSPORTATION
RALEIGH

STANDARD

CONCRETE BARRIER RAIL

(EBL)

REVISIONS								SHEET NO.
NO.	BY:	DATE:	NO.	BY:	DATE:			S-146
1			3					TOTAL SHEETS
2			4					162

Stantec
Stantec Consulting Services Inc.
801 Jones Franklin Road
Suite 300
Raleigh, NC 27606
Tel. (919) 851-6866
Fax. (919) 851-7024
www.stantec.com
License No. F-0672

ASSEMBLED BY :	J. L. HENNEKES	DATE :	08-06-13
CHECKED BY :	J. T. KELVINGTON	DATE :	08-06-13

DRAWN BY : ARB 5/87	REV. 10/1/11	MAA/GM	DESIGN ENGINEER OF RECORD: J. T. KELVINGTON DATE : 04-01-14
CHECKED BY : SJD 9/87	REV. 7/12	MAA/GM	
	REV. 6/13	MAA/GM	

NORTH CAROLINA PROFESSIONAL SEAL 13406 ENGINEER JOSEPH T. KELVINGTON

DocuSigned by: Joseph T. Kelvington 5/27/2014
847C9D37B0774AF...

U:\Structures\Little River\Drawing\EBL - Bridge 32\Final\R-0623_SD_BR_1.dgn 5/27/2014 3:48:38 PM jhagenbush

STR. #4