DocuSign Envelope ID: E6618080-E6D8-467D-B842-BC4A0736B9E5

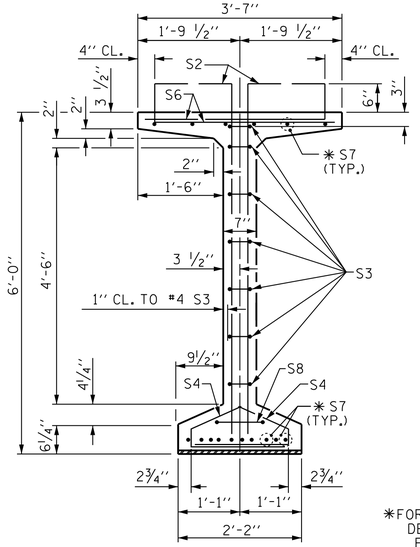

SECTION A-A

✱FOR S7 BARS. SEE DETAIL "C" OF PRESTRESSED CONCRETE GIRDER CONTINUOUS FOR LIVE LOAD DETAILS SHEET

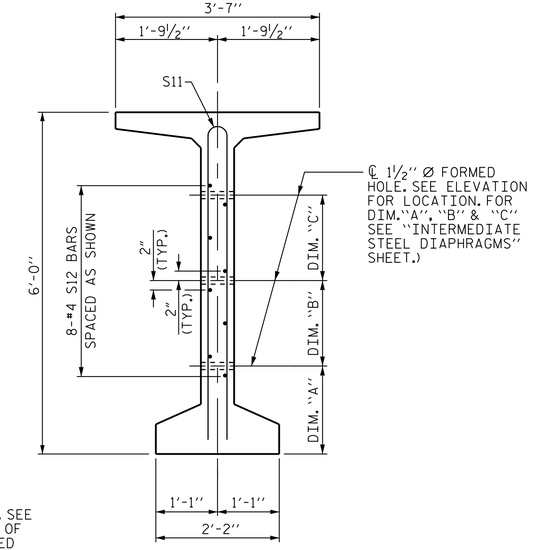

SECTION C-C

(S1, S6 AND S9 BARS NOT SHOWN)

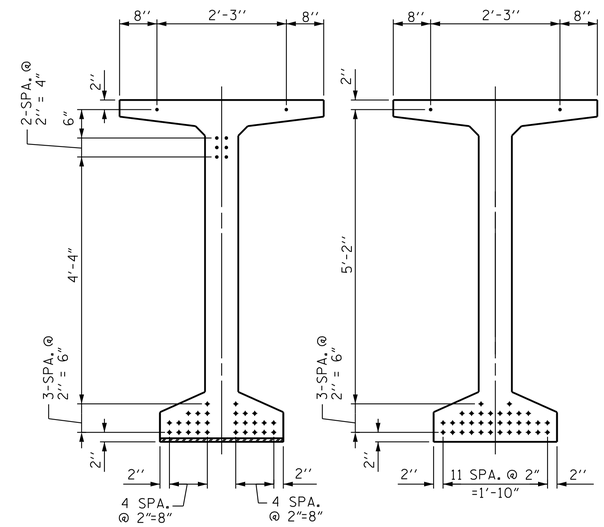

AT END OF GIRDER

AT ℄ OF GIRDER

0.6" Ø LOW RELAXATION STRAND LAYOUT

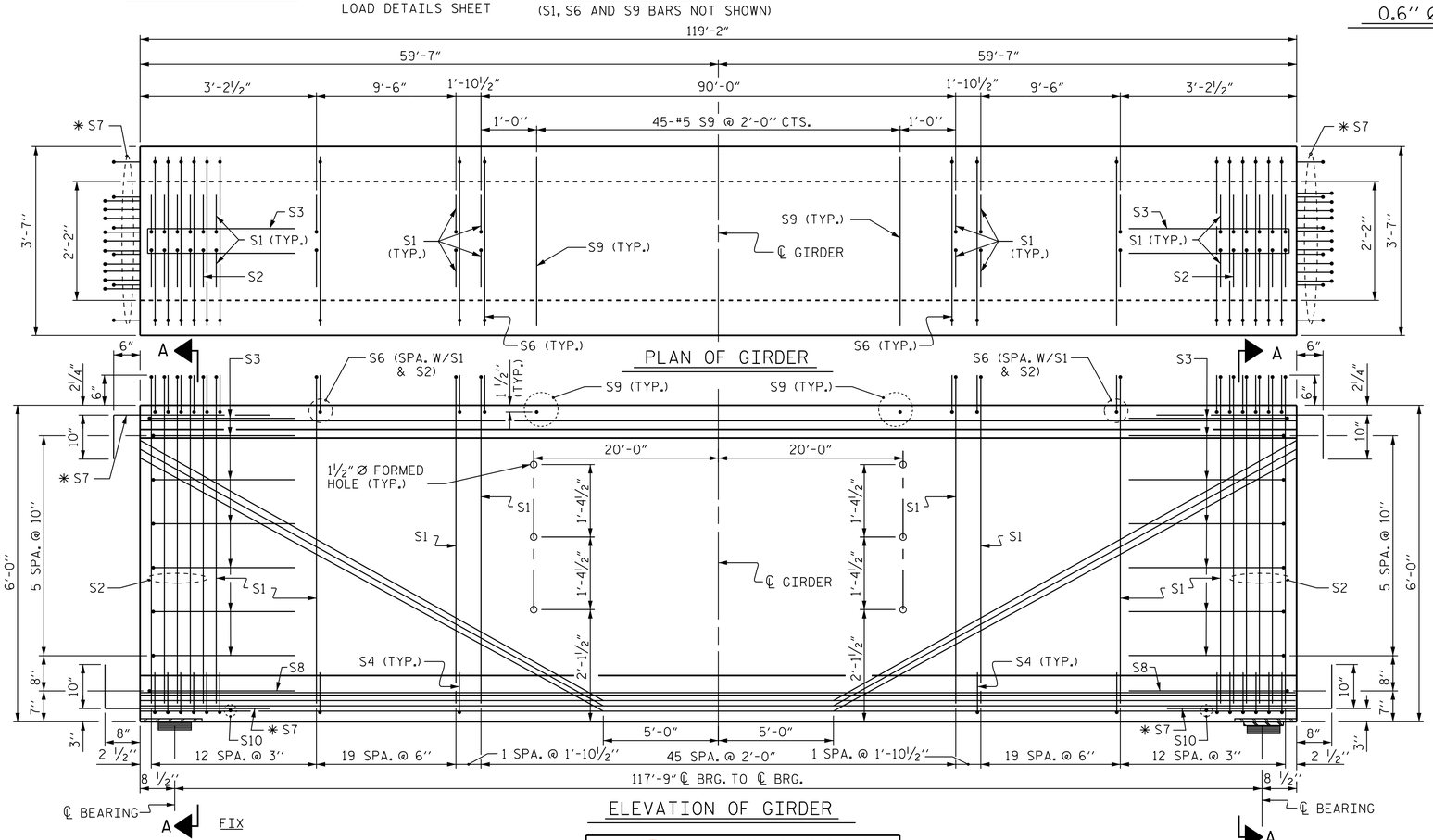

ELEVATION OF GIRDER

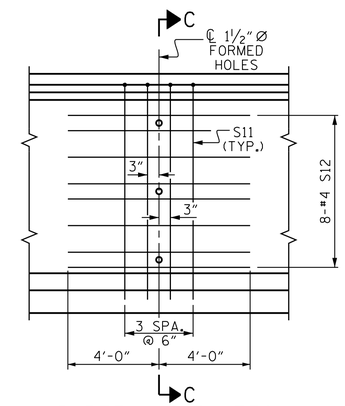

PARTIAL ELEVATION

SHOWING INTERMEDIATE STEEL DIAPHRAGM REINFORCING STEEL FOR GIRDER Nos. 1-4

0.6" Ø L. R. GRADE 270 STRANDS

AREA (SQUARE INCHES)	ULTIMATE STRENGTH (LBS. PER STRAND)	APPLIED PRESTRESS (LBS. PER STRAND)
0.217	58,600	43,950

REINFORCING STEEL FOR ONE GDR

BAR	NUMBER	SIZE	TYPE	LENGTH	WEIGHT
S1	200	#4	1	6'-10"	913
S2	20	#5	1	6'-10"	143
S3	14	#4	2	8'-5"	79
S4	128	#4	3	3'-0"	257
S6	220	#5	4	4'-4"	994
✱ S7	32	#5	STR	3'-8"	122
S8	2	#5	2	9'-0"	19
S9	45	#5	STR	3'-3"	153
S10	2	#3	STR	1'-10"	1
S11	8	#5	5	11'-6"	96
S12	16	#4	STR	8'-0"	86

✱ NOTE: S7 BARS SHALL BE BENT BEFORE SHIPMENT. HEAT BENDING SHALL NOT BE ALLOWED.

BAR TYPES

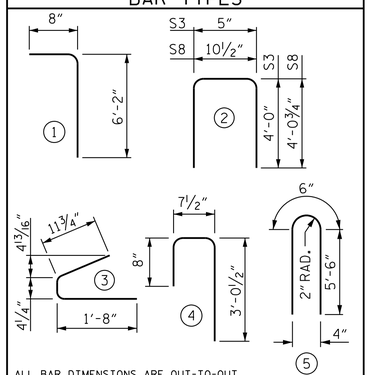

QUANTITIES FOR ONE GIRDER

SPAN	REINFORCING STEEL LB.	10,000 PSI CONCRETE C.Y.	0.6" Ø L.R. STRANDS No.
B	2863	25.5	36

GIRDERS REQUIRED

NUMBER	LENGTH	TOTAL LENGTH
4	119'-2"	476'-8"

PROJECT NO. R-0623

MONTGOMERY COUNTY

STATION: 339+48.56 -L-

SHEET 2 OF 4

STATE OF NORTH CAROLINA
DEPARTMENT OF TRANSPORTATION
RALEIGH

STANDARD

72" PRESTRESSED CONCRETE MODIFIED BULB TEE CONTINUOUS FOR LIVE LOAD
(SPAN B)
(WBL)

REVISIONS							SHEET NO.
NO.	BY:	DATE:	NO.	BY:	DATE:		S-98
1			3				TOTAL SHEETS
2			4				162

ASSEMBLED BY : J. B. GEILE	DATE : 03/05/14		
CHECKED BY : J. T. KELVINGTON	DATE : 03/06/14		
DRAWN BY : EEM 2/6/97	REV. 5/1/06R	TLA/GM	
CHECKED BY : VAP 2/6/97	REV. 10/1/11	MAA/GM	
	REV. 6/13	MAA/GM	

DESIGN ENGINEER OF RECORD: J. T. KELVINGTON DATE : 03-14-14

Stantec
Stantec Consulting Services Inc.
801 Jones Franklin Road
Suite 300
Raleigh, NC 27606
Tel. (919) 851-6866
Fax. (919) 851-7024
www.stantec.com
License No. F-0672

NORTH CAROLINA PROFESSIONAL SEAL 13406 ENGINEER JOSEPH T. KELVINGTON

DocuSigned by: Joseph T. Kelvington 847C9D3780774AF... 5/27/2014

STR. #3

U:\Structures\Little River\Drawing\WBL - Bridge 266\Final\R-0623_SD_G*2.dgn 5/27/2014 3:54:38 PM jhagenbush