DocuSign Envelope ID: 0467AB1B-32B1-4334-81D0-7D50B5979B14

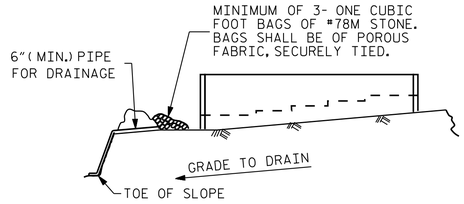

BAGGED STONE AND PIPE SHALL BE PLACED IMMEDIATELY AFTER COMPLETION OF END BENT EXCAVATION. PIPE MAY BE EITHER CONCRETE, CORRUGATED STEEL, CORRUGATED ALUMINUM ALLOY, OR CORRUGATED PLASTIC. PERFORATED PIPE WILL NOT BE ALLOWED.

BAGGED STONE SHALL REMAIN IN PLACE UNTIL THE ENGINEER DIRECTS THAT IT BE REMOVED. THE CONTRACTOR SHALL REMOVE AND DISPOSE OF SILT ACCUMULATIONS AT BAGGED STONE WHEN SO DIRECTED BY THE ENGINEER. BAGS SHALL BE REMOVED AND REPLACED WHENEVER THE ENGINEER DETERMINES THAT THEY HAVE DETERIORATED AND LOST THEIR EFFECTIVENESS.

NO SEPARATE PAYMENT WILL BE MADE FOR THIS WORK AND THE ENTIRE COST OF THIS WORK SHALL BE INCLUDED IN THE UNIT CONTRACT PRICE BID FOR THE SEVERAL PAY ITEMS.

TEMPORARY DRAINAGE AT END BENT

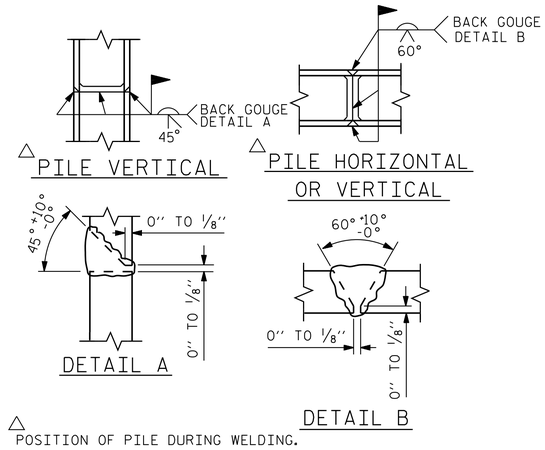

PILE SPLICE DETAILS

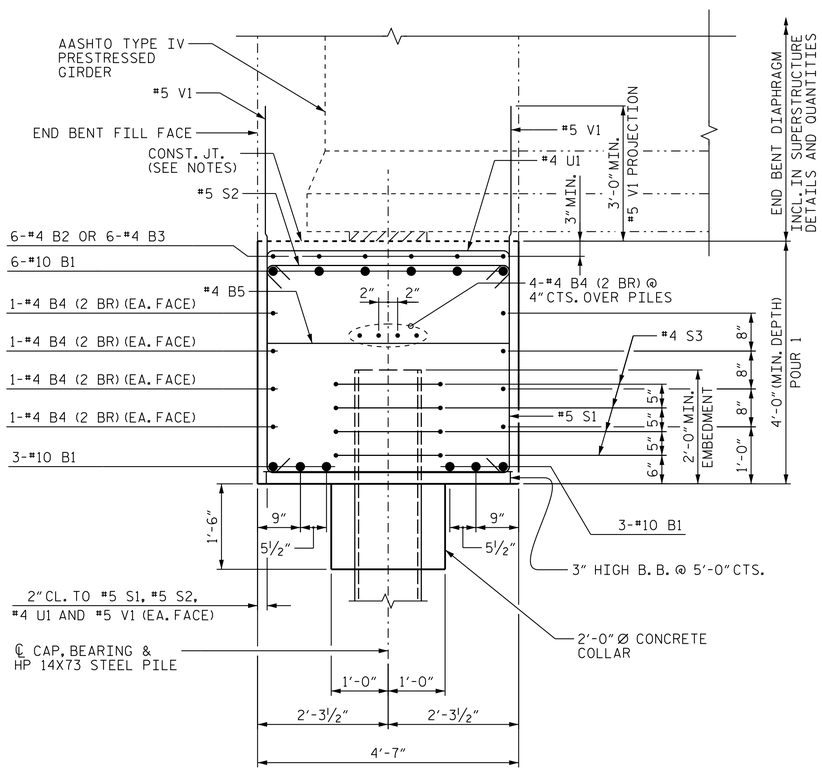

SECTION A-A

NOTES

TOP SURFACE AREAS OF THE END BENT CAP SHALL BE KEPT CLEAN AND FREE OF LAITANCE.

ROUGH FLOAT AND ROUGHEN THE TOP OF THE END BENT CAP TO PROVIDE MIN. SURFACE AMPLITUDE OF ¼". EXCEPT UNDER BEARING AREAS.

2 BR DENOTES 2 BAR RUN.

BAR TYPES

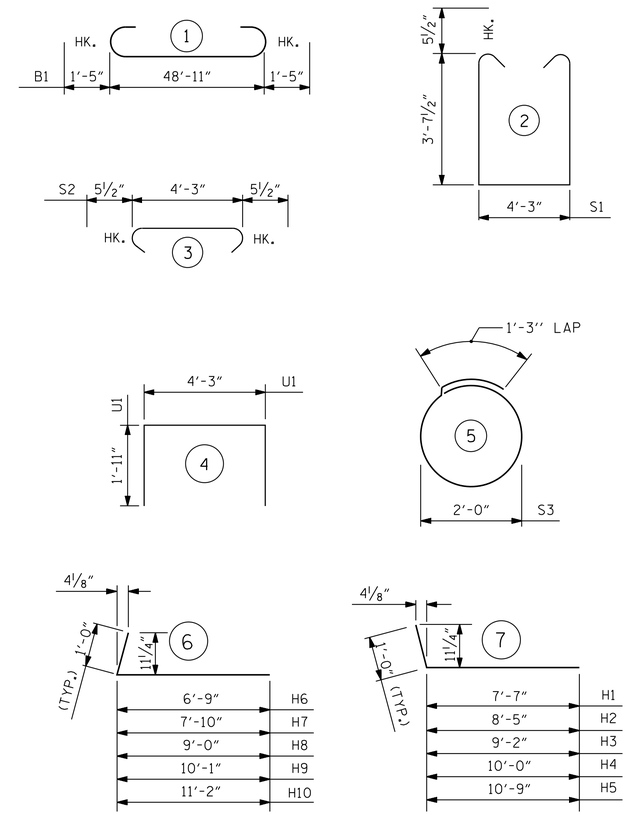

ALL BAR DIMENSIONS ARE OUT TO OUT.

BILL OF MATERIAL

END BENT 1

BAR	NO.	SIZE	TYPE	LENGTH	WEIGHT
B1	12	10	1	51'- 9"	2672
B2	12	4	STR.	11'- 4"	91
B3	6	4	STR.	7'- 10"	31
B4	24	4	STR.	25'- 6"	409
B5	16	4	STR.	4'- 3"	45
H1	2	6	7	8'-7"	26
H2	2	6	7	9'-5"	28
H3	2	6	7	10'-2"	31
H4	2	6	7	11'-0"	33
H5	2	6	7	11'-9"	35
H6	2	6	6	7'-9"	23
H7	2	6	6	8'-10"	27
H8	2	6	6	10'-0"	30
H9	2	6	6	11'-1"	33
H10	2	6	6	12'-2"	37
S1	51	5	2	12'- 5"	660
S2	44	5	3	5'- 2"	237
S3	28	4	5	7'- 7"	142
U1	21	4	4	8'- 1"	113
V1	83	5	STR.	6'-9"	656
V2	10	5	STR.	7'-7"	79

TOTAL REINFORCING STEEL 5438

CLASS A CONCRETE BREAKDOWN
POUR 1 - CAP, COLLARS C.Y. 37.4

CLASS A CONCRETE TOTAL C.Y. 37.4

HP14X73 PILES
NO. 7 LIN. FT. 315

STEEL PILE POINTS NO. 7

PROJECT NO. R-0623
MONTGOMERY COUNTY
STATION: 123+82.50 -L-

SHEET 2 OF 2

STATE OF NORTH CAROLINA
DEPARTMENT OF TRANSPORTATION
RALEIGH

SUBSTRUCTURE

END BENT 1
DETAILS

(WBL)

Stantec
Stantec Consulting Services Inc.
801 Jones Franklin Road
Suite 300
Raleigh, NC 27606
Tel. (919) 851-6866
Fax. (919) 851-7024
www.stantec.com
License No. F-0672

DRAWN BY : V. E. FRAGA DATE : 03-05-14
CHECKED BY : J. T. KELVINGTON DATE : 03-06-14
DESIGN ENGINEER OF RECORD: J. T. KELVINGTON DATE : 03-11-14

NORTH CAROLINA PROFESSIONAL SEAL 13406 ENGINEER JOSEPH T. KELVINGTON
DocuSigned by: Joseph T. Kelvington 847C9D37B0774AF... 5/28/2014

REVISIONS						SHEET NO.
NO.	BY:	DATE:	NO.	BY:	DATE:	S-30
1			3			TOTAL SHEETS
2			4			82

STR. #1

U:\Structures\Warner Creek\Drawing\WBL - Bridge 264\Drawing\Final\R-0623_SD_EB1_2.dgn 5/12/2014 5:33:34 PM vdoan