DocuSign Envelope ID: 60C83F11-8CD5-46D8-86E0-7E92CF678443

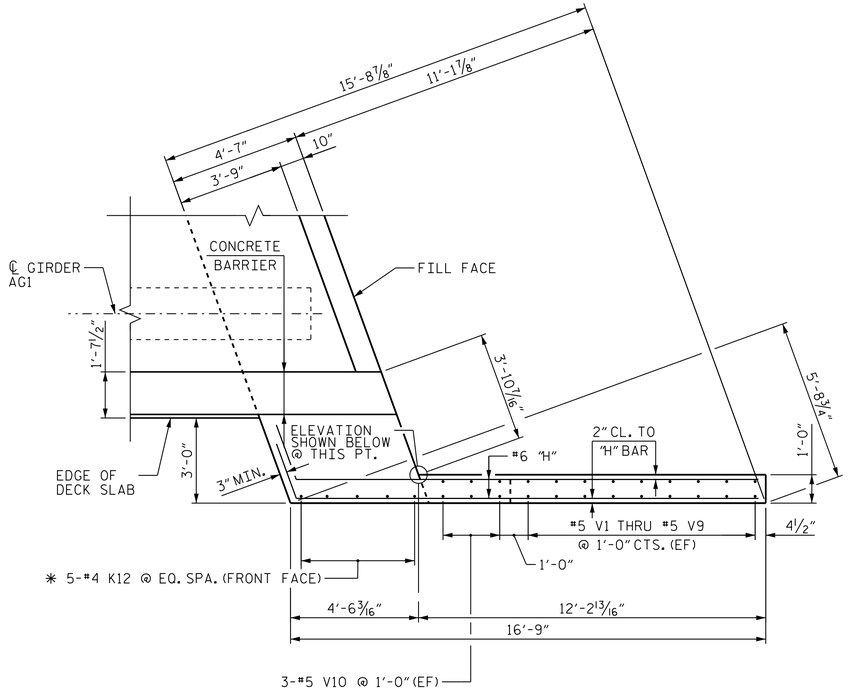

PLAN OF LEFT WING (W1)

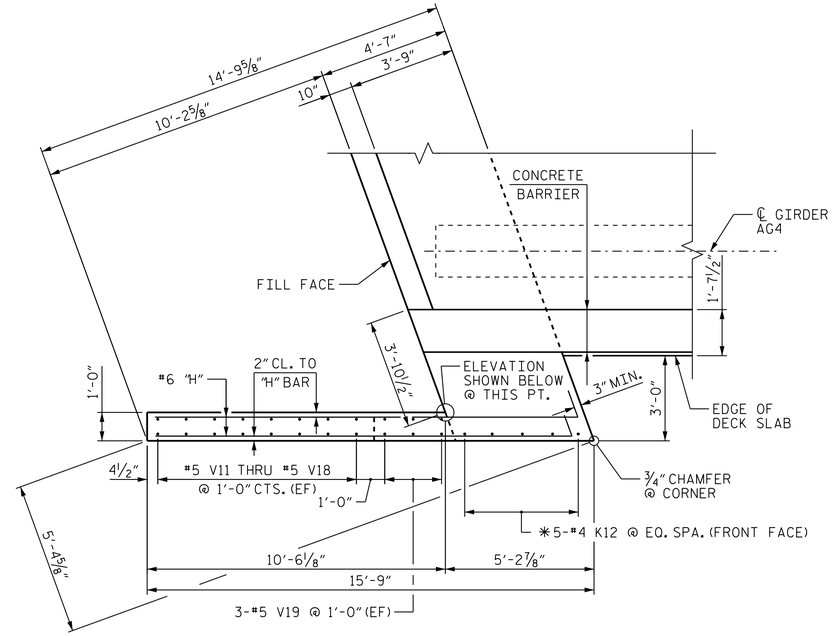

PLAN OF RIGHT WING (W2)

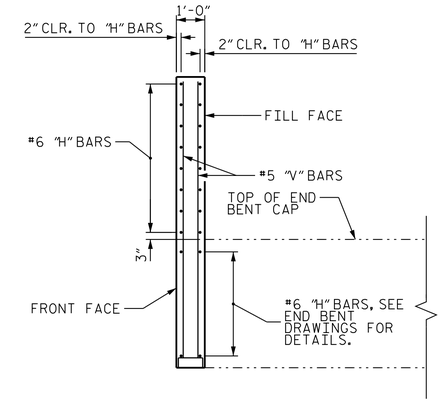

SECTION E-E

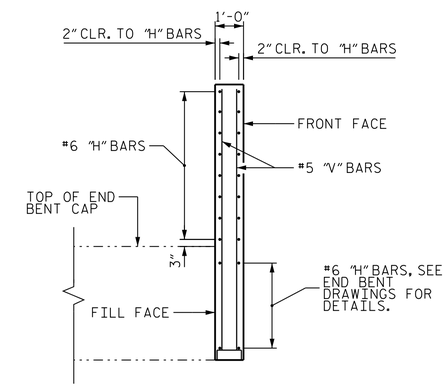

SECTION F-F

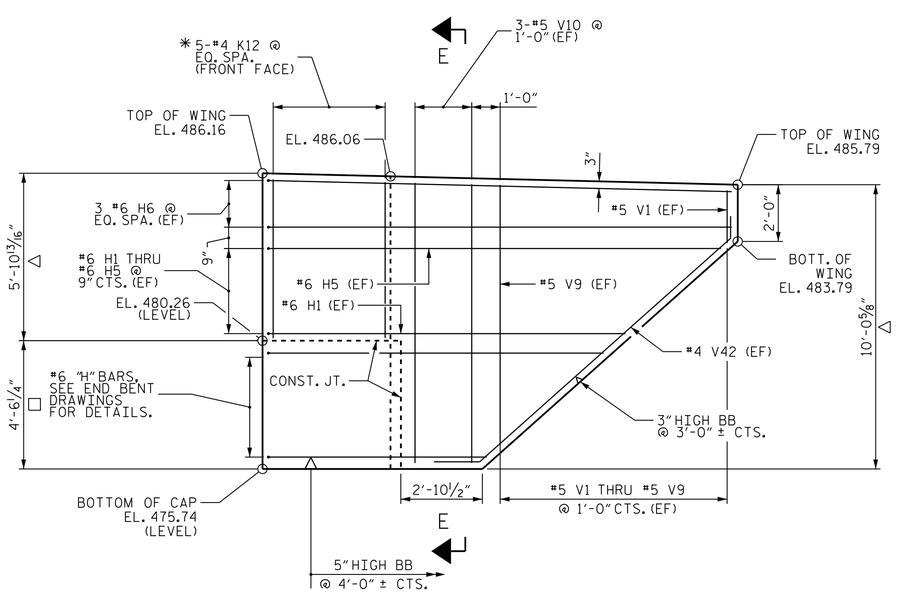

ELEVATION OF LEFT WING (W1)

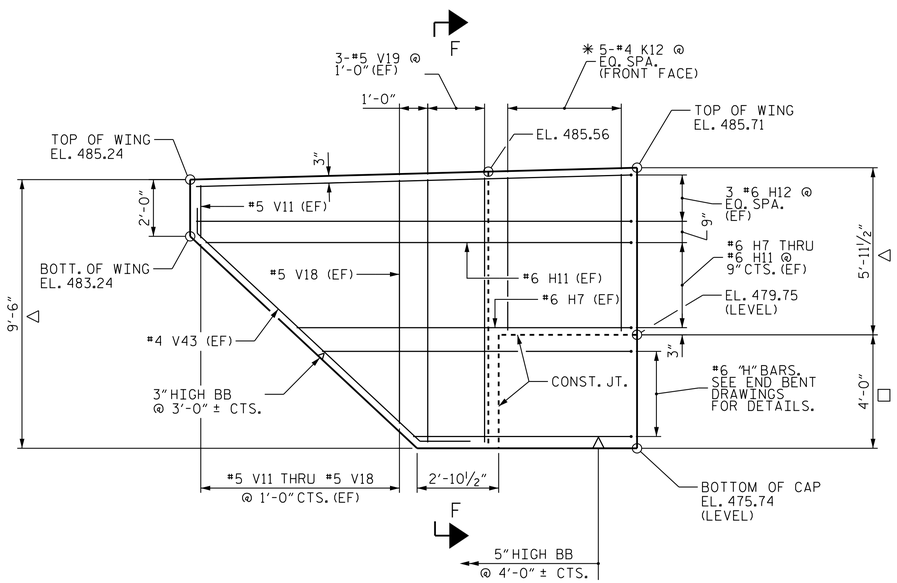

ELEVATION OF RIGHT WING (W2)

NOTES

✱ SEE "PLAN OF SPAN DETAILS - DIAPHRAGMS" SHT. 1 OF 3

□ END BENT CAP - SUBSTRUCTURE POUR 1

△ DIAPHRAGM AND WING WALL - SUPERSTRUCTURE POUR 4

(EF) - DENOTES EACH FACE OF WING WALL

PROJECT NO. R-0623

MONTGOMERY COUNTY

STATION: 123+82.50 -L-

SHEET 1 OF 2

STATE OF NORTH CAROLINA
DEPARTMENT OF TRANSPORTATION
RALEIGH

SUPERSTRUCTURE

PLAN OF SPAN DETAILS
WING WALL (END BENT 1)

(EBL)

REVISIONS						SHEET NO.
NO.	BY:	DATE:	NO.	BY:	DATE:	S-54
1			3			TOTAL SHEETS
2			4			82

STR. #2

Stantec
Stantec Consulting Services Inc.
801 Jones Franklin Road
Suite 300
Raleigh, NC 27606
Tel. (919) 851-6866
Fax. (919) 851-7024
www.stantec.com
License No. F-0672

DRAWN BY : V. E. FRAGA DATE : 03-07-14
CHECKED BY : J. T. KELVINGTON DATE : 03-11-14
DESIGN ENGINEER OF RECORD: J. T. KELVINGTON DATE : 03-11-14

NORTH CAROLINA PROFESSIONAL SEAL 13406 ENGINEER JOSEPH T. KELVINGTON
DocuSigned by: Joseph T. Kelvington 847C9D378074AF... 7/28/2014

U:\Structures\Warner Creek\Drawing\EBL - Bridge 265\Drawing\Final\R-0623_SD_WW_1.dgn 5/12/2014 5:42:32 PM vdoan