DocuSign Envelope ID: 0467AB1B-32B1-4334-81D0-7D50B5979B14

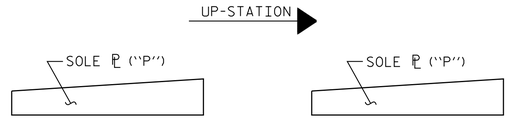

SOLE ℙ PLACEMENT DETAIL

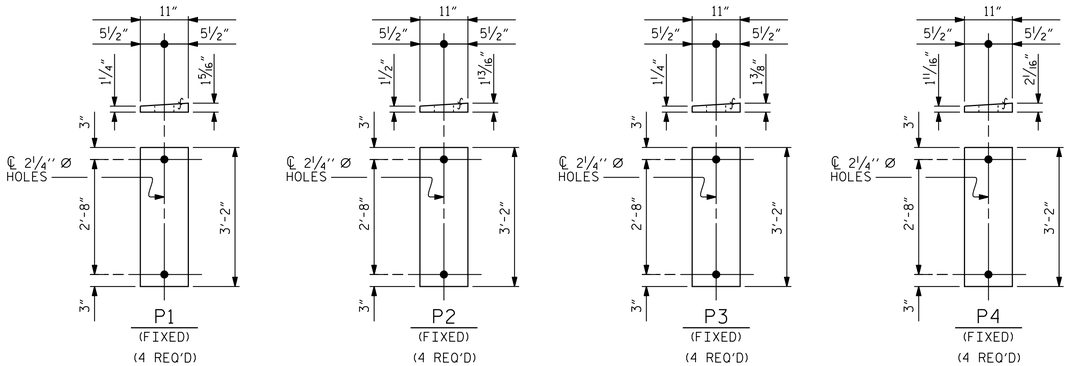

SOLE PLATE DETAILS ("P")

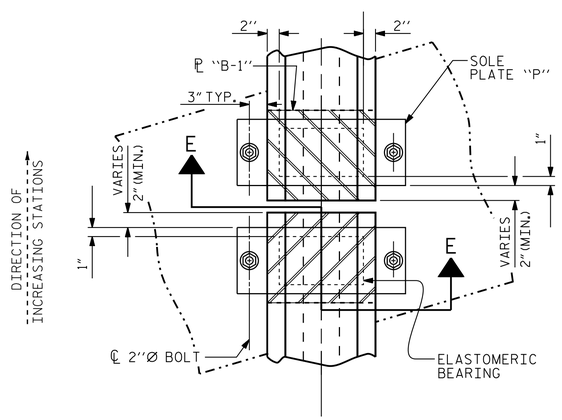

TYPICAL PLAN
(SHOWING CONTINUOUS BENT)

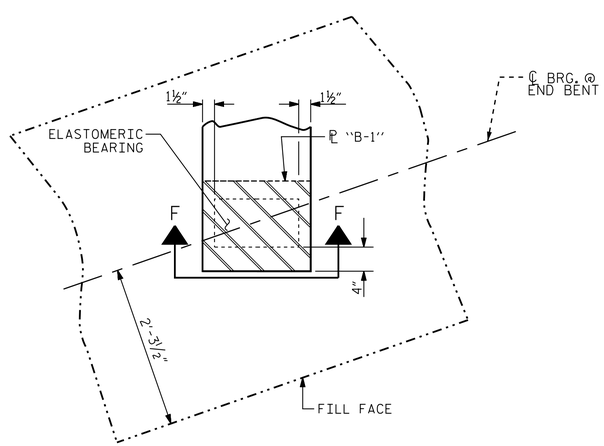

TYPICAL PLAN @ INTEGRAL END BENT

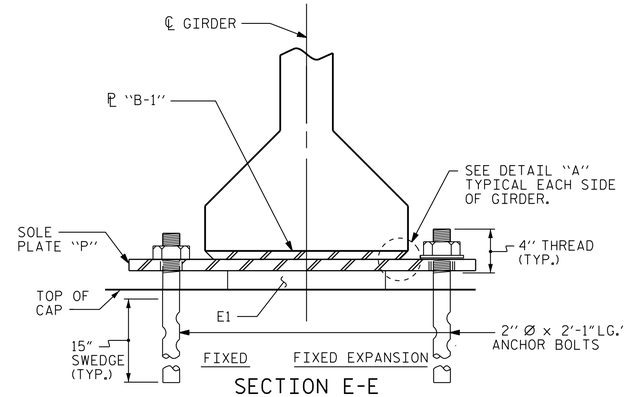

SECTION E-E

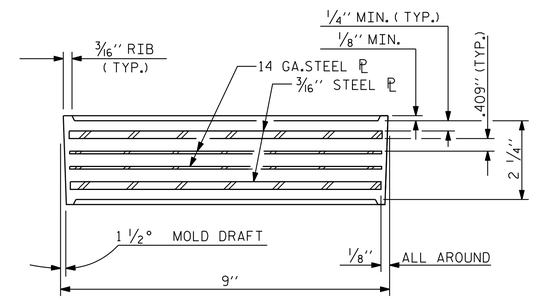

TYPICAL SECTION OF ELASTOMERIC BEARINGS

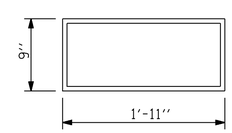

E1 (24 REQ'D)

PLAN VIEW OF ELASTOMERIC BEARING

TYPE V

HARDNESS OF ELASTOMER = 60

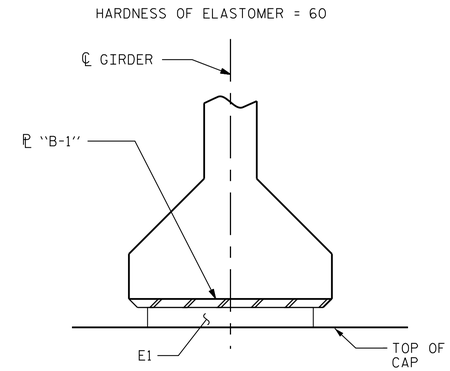

INTEGRAL END BENT

SECTION F-F

NOTES

AT ALL FIXED POINTS OF SUPPORT, NUTS FOR ANCHOR BOLTS ARE TO BE TIGHTENED FINGER TIGHT AND THEN BACKED OFF ½ TURN. THE THREAD OF THE NUT AND BOLT SHALL THEN BE BURRED WITH A SHARP POINTED TOOL.

STEEL SOLE PLATES, ANCHOR BOLTS, NUTS, AND WASHERS SHALL BE GALVANIZED IN ACCORDANCE WITH THE STANDARD SPECIFICATIONS.

PRIOR TO WELDING, GRIND THE GALVANIZED SURFACE OF THE PORTION OF THE EMBEDDED PLATE AND SOLE PLATE THAT ARE TO BE WELDED. AFTER WELDING, DAMAGED GALVANIZED SURFACES SHALL BE REPAIRED IN ACCORDANCE WITH THE STANDARD SPECIFICATIONS.

WHEN WELDING THE SOLE PLATE TO THE EMBEDDED PLATE IN THE GIRDER, USE TEMPERATURE INDICATING WAX PENS, OR OTHER SUITABLE MEANS, TO ENSURE THAT THE TEMPERATURE OF THE SOLE PLATE DOES NOT EXCEED 300°F. TEMPERATURES ABOVE THIS MAY DAMAGE THE ELASTOMER.

SOLE PLATE "P", BOLTS, NUTS AND WASHERS, SHALL BE INCLUDED IN THE PAY ITEM FOR PRESTRESSED CONCRETE GIRDERS.

ANCHOR BOLTS SHALL MEET THE REQUIREMENTS OF ASTM A449. NUTS SHALL MEET THE REQUIREMENTS OF AASHTO M291-DH OR AASHTO M292-2H. WASHERS SHALL MEET THE REQUIREMENTS OF AASHTO M293. SHOP DRAWINGS ARE NOT REQUIRED FOR ANCHOR BOLT, NUTS AND WASHERS. SHOP INSPECTION IS REQUIRED.

ALL SURFACES OF BEARING PLATES SHALL BE SMOOTH AND STRAIGHT.

THE ELASTOMER IN THE STEEL REINFORCED BEARINGS SHALL HAVE A SHEAR MODULUS OF 0.160 KSI, IN ACCORDANCE WITH AASHTO M251.

FOR STEEL REINFORCED ELASTOMERIC BEARINGS, SEE SPECIAL PROVISIONS.

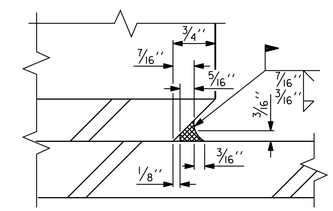

DETAIL "A"

MAXIMUM ALLOWABLE SERVICE LOADS	
D.L.+L.L. (NO IMPACT)	
TYPE V	365 k

PROJECT NO. R-0623

MONTGOMERY COUNTY

STATION: 123+82.50 -L-

STATE OF NORTH CAROLINA
DEPARTMENT OF TRANSPORTATION
RALEIGH

STANDARD
ELASTOMERIC BEARING DETAILS
PRESTRESSED CONCRETE GIRDER SUPERSTRUCTURE
(WBL)

Stantec
Stantec Consulting Services Inc.
801 Jones Franklin Road
Suite 300
Raleigh, NC 27606
Tel. (919) 851-6866
Fax. (919) 851-7024
www.stantec.com
License No. F-0672

ASSEMBLED BY : T. N. ENNIS DATE : 01/30/14
CHECKED BY : J. T. KELVINGTON DATE : 02/01/14

DRAWN BY : WJH 8/89
CHECKED BY : CRK 8/89

REV. 5/1/06 TLA/GM
REV. 10/1/11 MAA/GM
REV. 6/13 AAC/MAA

DESIGN ENGINEER OF RECORD: J. T. KELVINGTON DATE : 03-11-14

NORTH CAROLINA PROFESSIONAL SEAL 13406 ENGINEER JOSEPH T. KELVINGTON

DocuSigned by: Joseph T. Kelvington 847C9D37B0774AF... 5/28/2014

NO.	BY:	DATE:	NO.	BY:	DATE:
1			3		
2			4		

SHEET NO. S-21
TOTAL SHEETS 82

STR. #1 STD. NO. EB3

U:\Structures\Warner Creek\Drawing\WBL - Bridge 264\Drawing\Final\R-0623_SD_BG.dgn 5/12/2014 5:33:16 PM vdoan