DocuSign Envelope ID: 60C83F11-8CD5-46D8-86E0-7E92CF678443

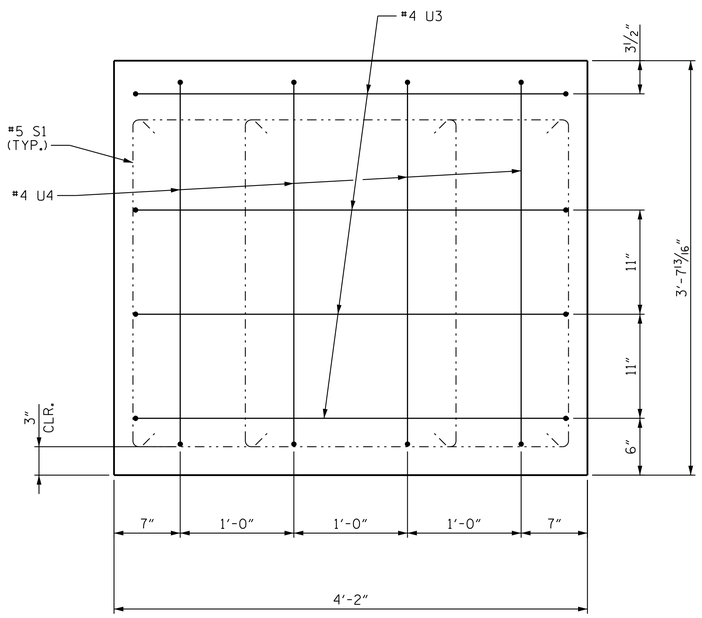

VIEW A-A

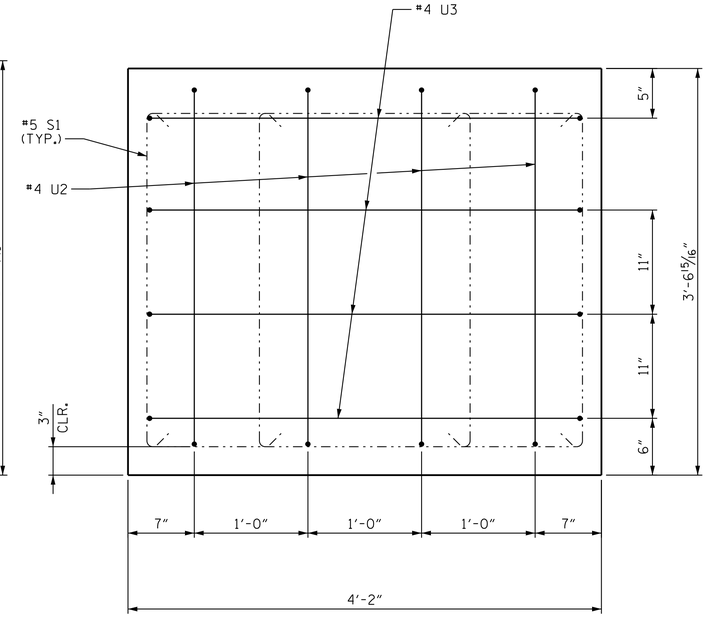

VIEW C-C

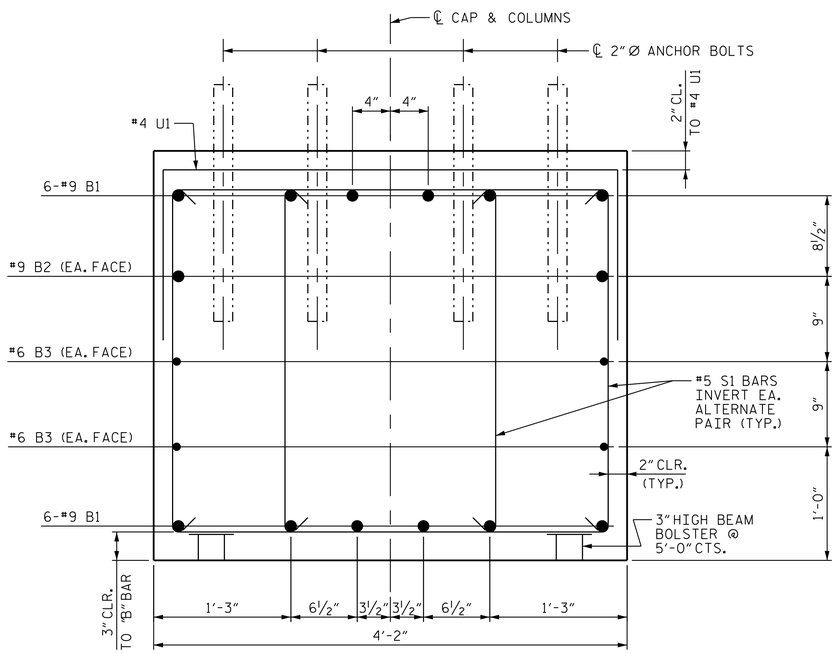

SECTION B-B

BAR TYPES

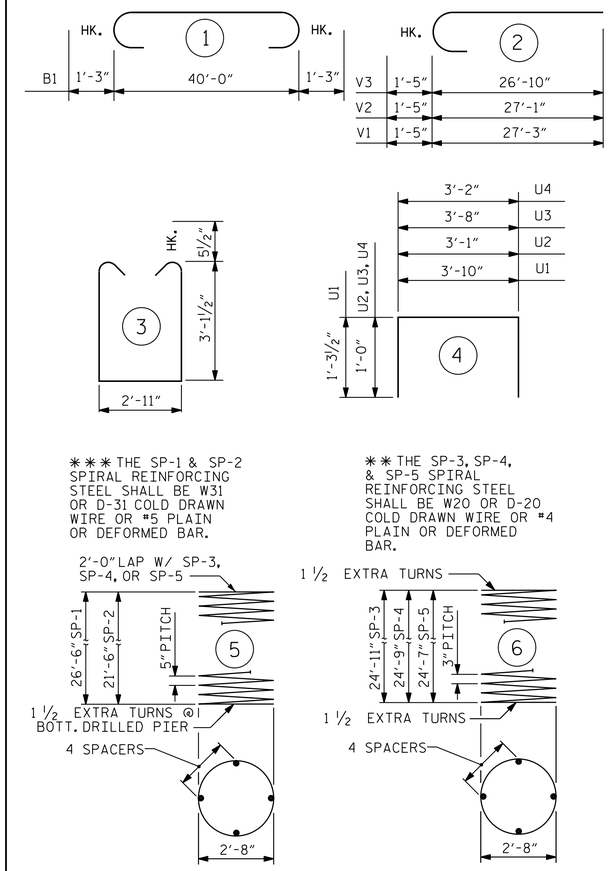

✱✱✱ THE SP-1 & SP-2 SPIRAL REINFORCING STEEL SHALL BE W31 OR D-31 COLD DRAWN WIRE OR #5 PLAIN OR DEFORMED BAR.

✱✱ THE SP-3, SP-4, & SP-5 SPIRAL REINFORCING STEEL SHALL BE W20 OR D-20 COLD DRAWN WIRE OR #4 PLAIN OR DEFORMED BAR.

ALL BAR DIMENSIONS ARE OUT TO OUT.

BILL OF MATERIAL

BENT #1

BAR	NO.	SIZE	TYPE	LENGTH	WEIGHT
B1	12	9	1	42'-6"	1734
B2	2	9	STR	39'-6"	269
B3	4	6	STR	40'-0"	240
M1	24	10	STR	35'-7"	3675
M2	12	10	STR	30'-7"	1579
S1	96	5	3	10'-1"	1010
U1	36	4	4	6'-5"	154
U2	4	4	4	5'-1"	14
U3	8	4	4	5'-8"	30
U4	4	4	4	5'-2"	14
V1	12	10	2	28'-8"	1480
V2	12	10	2	28'-6"	1472
V3	12	10	2	28'-3"	1459
REINFORCING STEEL				LBS.	13,130
SP-1	2	✱✱✱	5	537'-5"	1121
SP-2	1	✱✱✱	5	438'-9"	458
SP-3	1	✱✱	6	847'-11"	566
SP-4	1	✱✱	6	841'-10"	562
SP-5	1	✱✱	6	835'-6"	558
SPIRAL COLUMN					
REINFORCING STEEL				LBS.	3,265
DRILLED PIER CONC BREAKDOWN:					
POUR 1 DRILLED PIERS				C.Y.	27.0
3'-6" DIA DRILLED PIERS					
IN SOIL				LIN. FT.	53.0
3'-6" DIA DRILLED PIERS					
NOT IN SOIL				LIN. FT.	23.0
CLASS A CONCRETE BREAKDOWN					
POUR #2 COLUMNS				C.Y.	19.2
POUR #3 CAP				C.Y.	22.4
TOTAL CLASS A CONC.				C.Y.	41.6
SID INSPECTIONS				EA.	1
CSL TUBES				LIN. FT.	334.0
CSL TESTING				EA.	1

PROJECT NO. R-0623

MONTGOMERY COUNTY

STATION: 123+82.50 -L-

SHEET 3 OF 3

STATE OF NORTH CAROLINA
DEPARTMENT OF TRANSPORTATION
RALEIGH

SUBSTRUCTURE

BENT #1

(EBL)

Stantec
Stantec Consulting Services Inc.
801 Jones Franklin Road
Suite 300
Raleigh, NC 27606
Tel. (919) 851-6866
Fax. (919) 851-7024
www.stantec.com
License No. F-0672

DRAWN BY : J. L. HENNEKES DATE : 03-13-14
CHECKED BY : J. T. KELVINGTON DATE : 03-13-14
DESIGN ENGINEER OF RECORD: J. T. KELVINGTON DATE : 03-11-14

NORTH CAROLINA PROFESSIONAL SEAL 13406 ENGINEER JOSEPH T. KELVINGTON
DocuSigned by: Joseph T. Kelvington 847C9D378074AF... 3/28/2014

REVISIONS						SHEET NO.
NO.	BY:	DATE:	NO.	BY:	DATE:	S-74
1			3			TOTAL SHEETS
2			4			82

STR. #2

U:\Structures\Warner Creek\Drawing\EBL - Bridge 265\Drawing\Final\R-0623_SD_BM_3.dgn 5/12/2014 5:43:18 PM vdoan