DocuSign Envelope ID: 0467AB1B-32B1-4334-81D0-7D50B5979B14

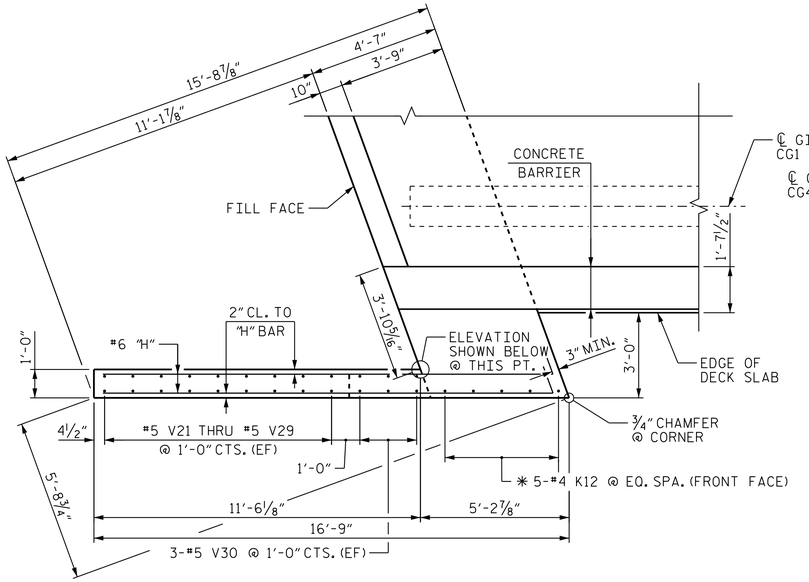

PLAN OF LEFT WING (W3)

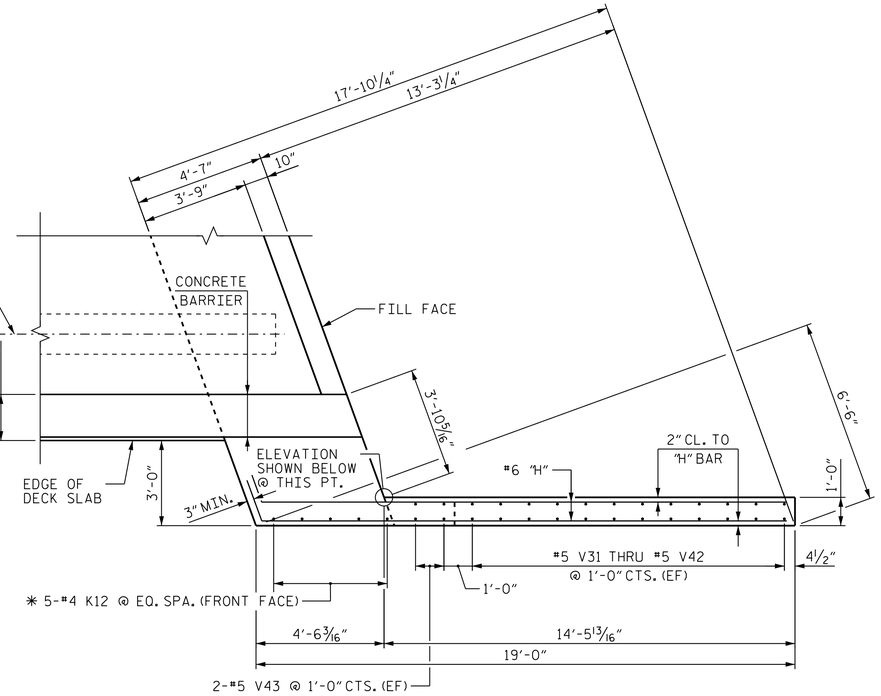

PLAN OF RIGHT WING (W4)

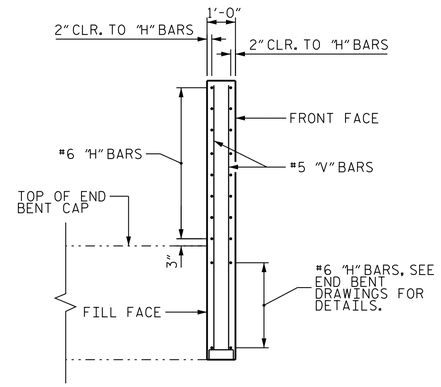

SECTION E-E

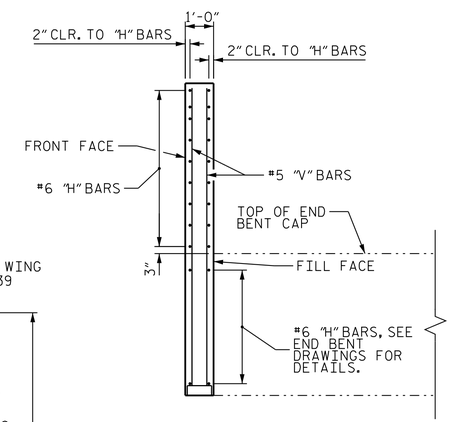

SECTION F-F

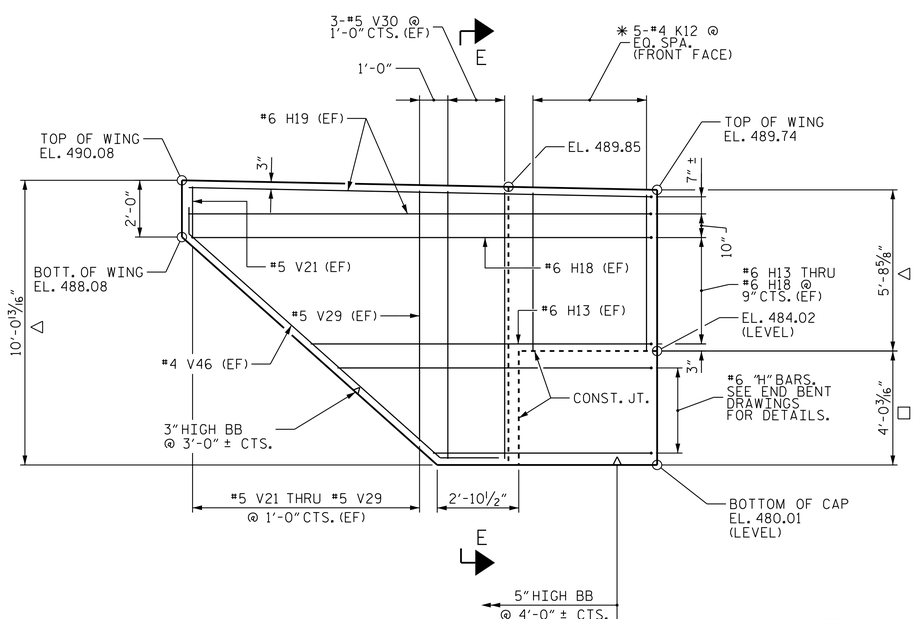

ELEVATION OF LEFT WING (W3)

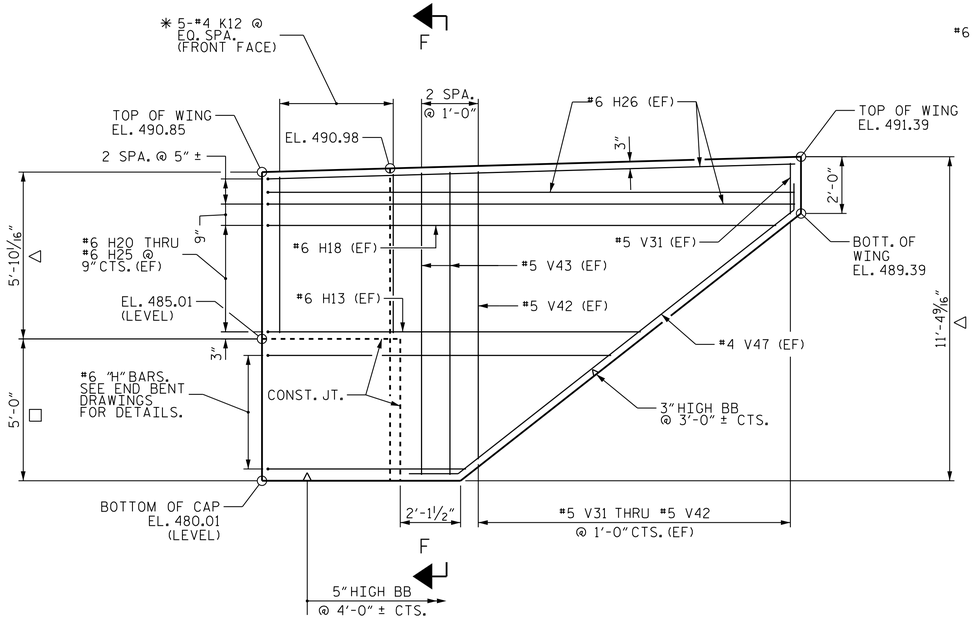

ELEVATION OF RIGHT WING (W4)

NOTES

✱ SEE "PLAN OF SPAN DETAILS - DIAPHRAGMS" SHT. 1 OF 3

☐ END BENT CAP - SUBSTRUCTURE POUR 1

△ DIAPHRAGM AND WING WALL - SUPERSTRUCTURE POUR 4

(EF) - DENOTES EACH FACE OF WING WALL

PROJECT NO. R-0623

MONTGOMERY COUNTY

STATION: 123+82.50 -L-

SHEET 2 OF 2

STATE OF NORTH CAROLINA
DEPARTMENT OF TRANSPORTATION
RALEIGH

SUPERSTRUCTURE

PLAN OF SPAN DETAILS
WING WALLS (END BENT 2)

(WBL)

REVISIONS								SHEET NO.
NO.	BY:	DATE:	NO.	BY:	DATE:			S-14
1			3					TOTAL SHEETS
2			4					82

STR. #1

NORTH CAROLINA PROFESSIONAL SEAL 13406 ENGINEER JOSEPH T. KELVINGTON

DocuSigned by: Joseph T. Kelvington 847C9D3780774AF... 5/28/2014

Stantec
Stantec Consulting Services Inc.
801 Jones Franklin Road
Suite 300
Raleigh, NC 27606
Tel. (919) 851-6866
Fax. (919) 851-7024
www.stantec.com
License No. F-0672

DRAWN BY: V. E. FRAGA DATE: 02-05-14
CHECKED BY: J. T. KELVINGTON DATE: 02-14-14
DESIGN ENGINEER OF RECORD: J. T. KELVINGTON DATE: 03-11-14

U:\Structures\Warner Creek\Drawing\WBL - Bridge 264\Drawing\Final\R-0623_SD_WW_2.dgn 5/12/2014 5:33:03 PM vdoan