DocuSign Envelope ID: 60C83F11-8CD5-46D8-86E0-7E92CF678443

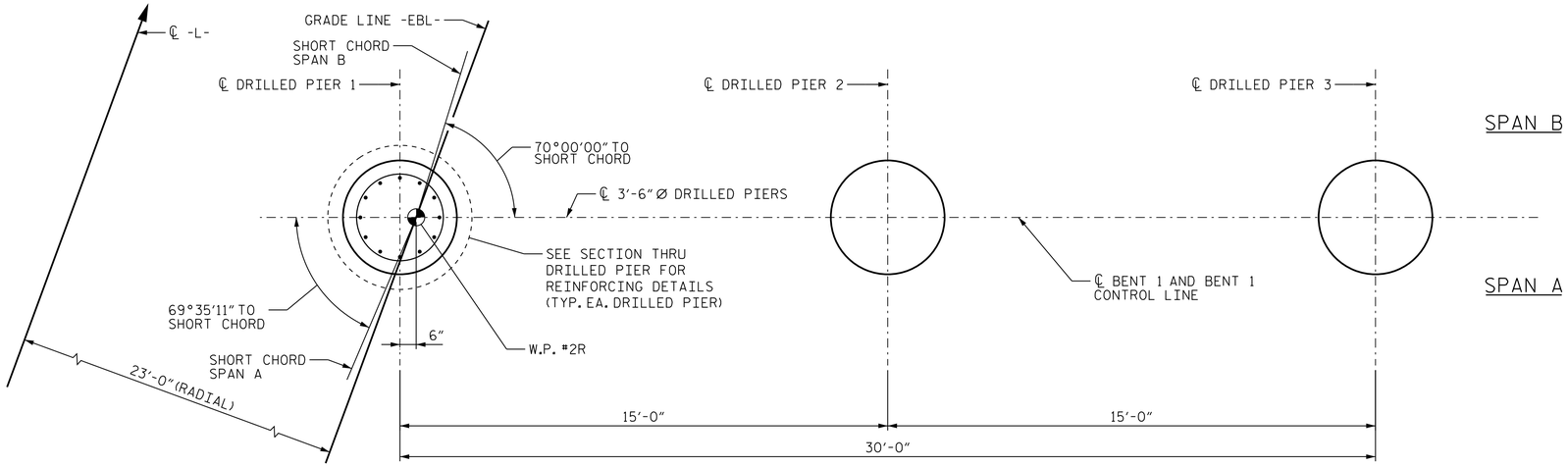

PLAN OF DRILLED PIERS

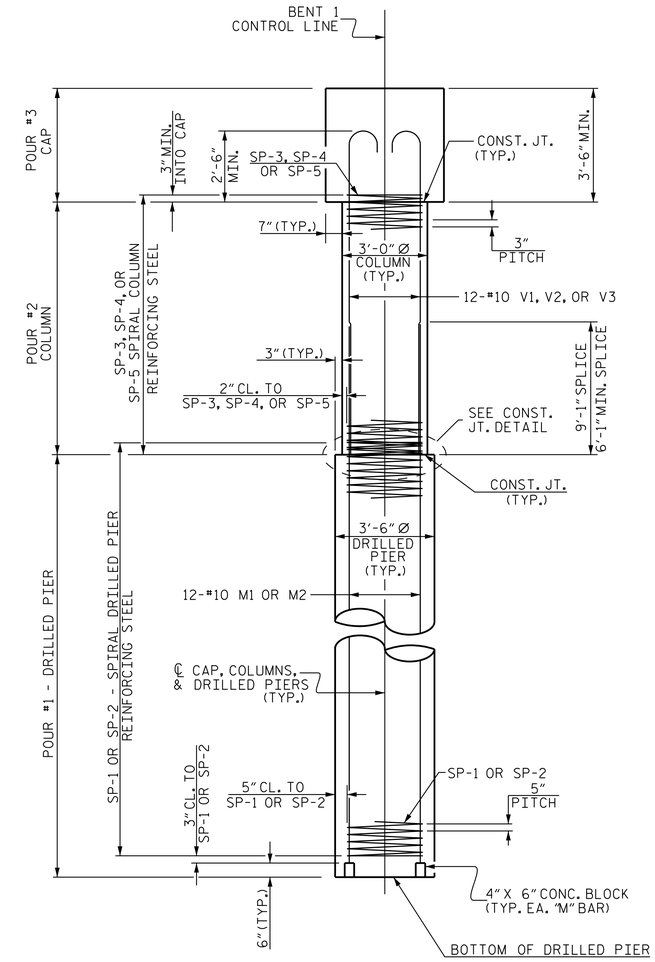

END ELEVATION

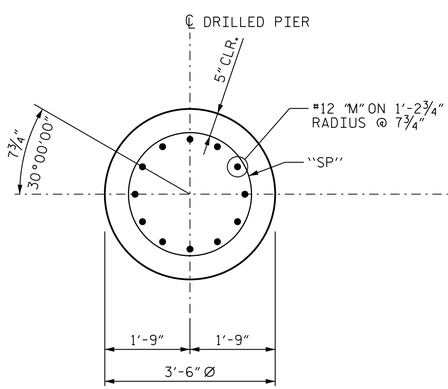

SECTION THRU DRILLED PIER TYPICAL ALL DRILLED PIERS

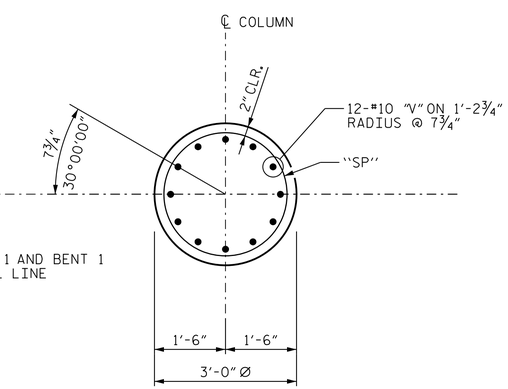

SECTION THRU COLUMN TYPICAL ALL COLUMNS

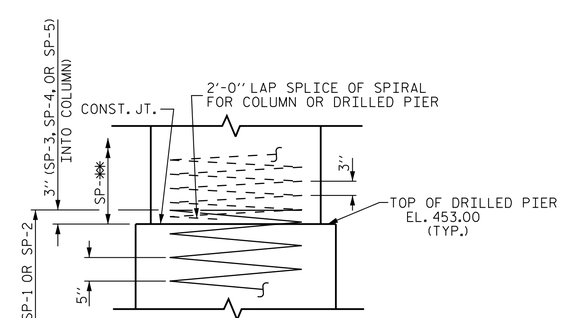

CONSTRUCTION JOINT DETAIL

SP-✳✳ DENOTES SP-3, SP-4, OR SP-5

PROJECT NO. R-0623

MONTGOMERY COUNTY

STATION: 123+82.50 -L-

SHEET 2 OF 3

STATE OF NORTH CAROLINA
DEPARTMENT OF TRANSPORTATION
RALEIGH

SUBSTRUCTURE

BENT #1

(EBL)

REVISIONS						SHEET NO.
NO.	BY:	DATE:	NO.	BY:	DATE:	S-73
1			3			TOTAL SHEETS
2			4			82

STR. #2

Stantec
Stantec Consulting Services Inc.
801 Jones Franklin Road
Suite 300
Raleigh, NC 27606
Tel. (919) 851-6866
Fax. (919) 851-7024
www.stantec.com
License No. F-0672

DRAWN BY : J. L. HENNEKES DATE : 03-12-14
CHECKED BY : J. T. KELVINGTON DATE : 03-12-14
DESIGN ENGINEER OF RECORD: J. T. KELVINGTON DATE : 03-11-14

NORTH CAROLINA PROFESSIONAL SEAL 13406 ENGINEER JOSEPH T. KELVINGTON
DocuSigned by: Joseph T. Kelvington 847C9D378077 4AF... 5/28/2014

U:\Structures\Warner Creek\Drawing\EBL - Bridge 265\Drawing\Final\R-0623_SD_B#1_2.dgn 5/12/2014 5:43:18 PM vdoan