DocuSign Envelope ID: 0467AB1B-32B1-4334-81D0-7D50B5979B14

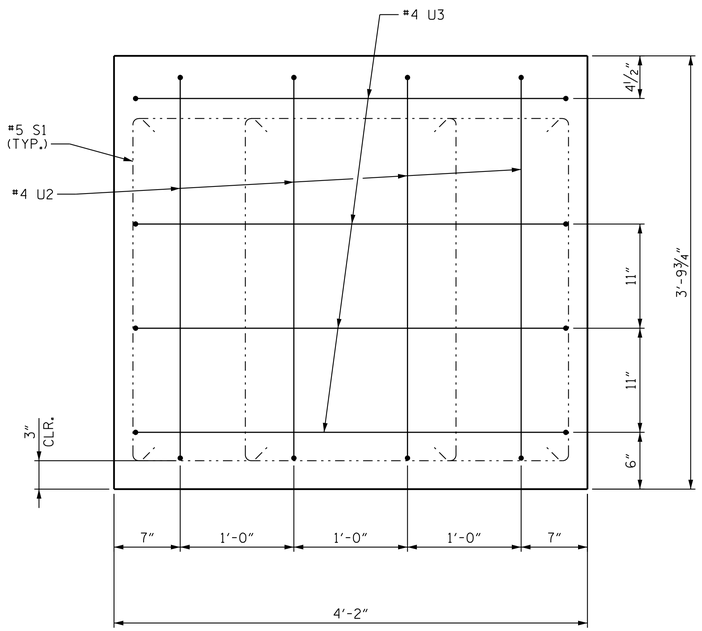

VIEW A-A

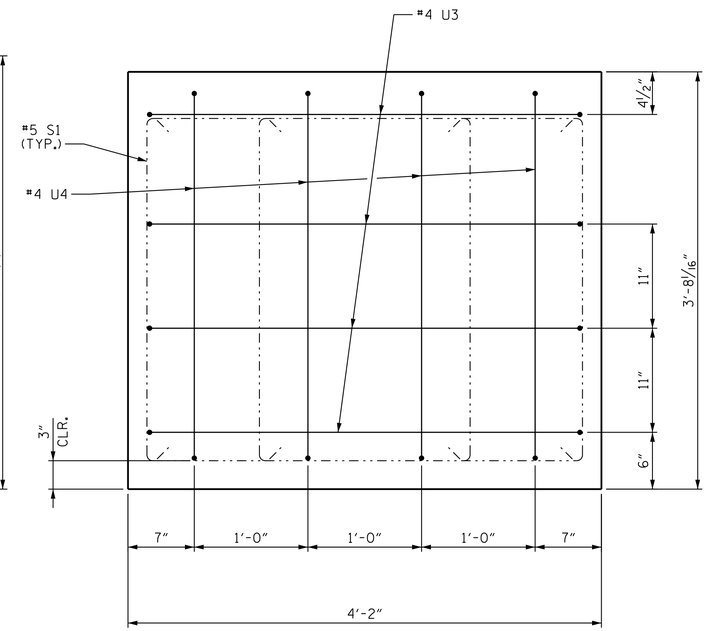

VIEW C-C

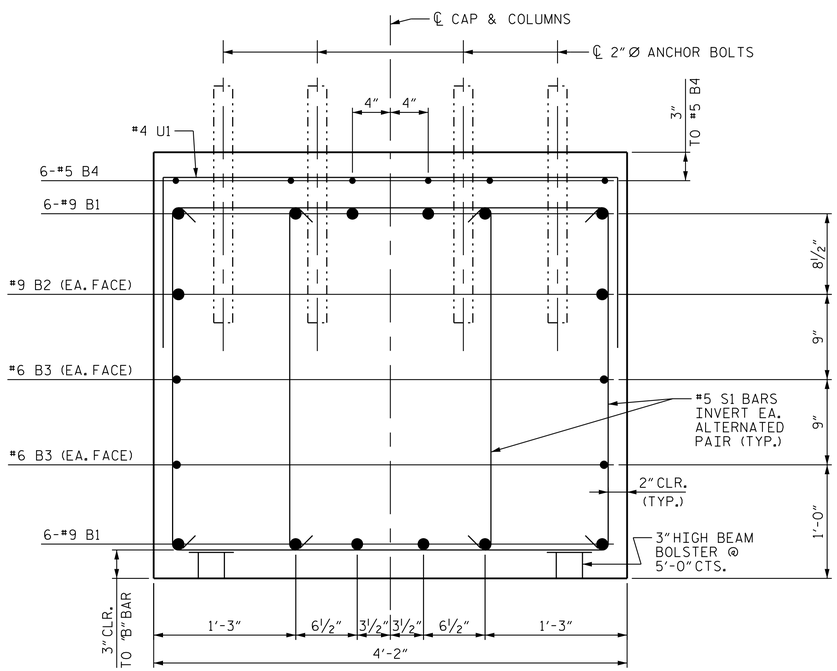

SECTION B-B

BAR TYPES

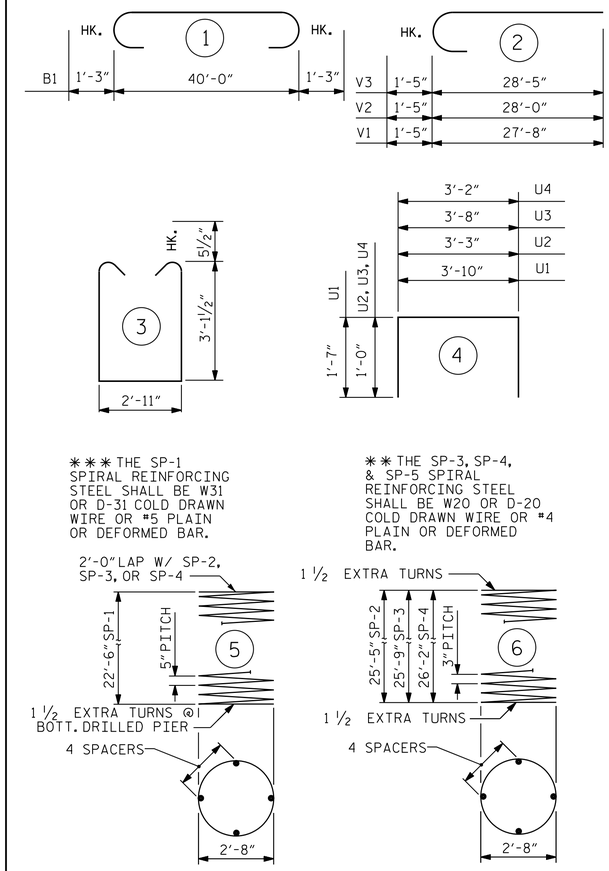

✱✱✱ THE SP-1 SPIRAL REINFORCING STEEL SHALL BE W31 OR D-31 COLD DRAWN WIRE OR #5 PLAIN OR DEFORMED BAR.

✱✱ THE SP-3, SP-4, & SP-5 SPIRAL REINFORCING STEEL SHALL BE W20 OR D-20 COLD DRAWN WIRE OR #4 PLAIN OR DEFORMED BAR.

ALL BAR DIMENSIONS ARE OUT TO OUT.

BILL OF MATERIAL

BENT #2

BAR	NO.	SIZE	TYPE	LENGTH	WEIGHT
B1	12	9	1	42'-6"	1734
B2	2	9	STR	39'-6"	269
B3	4	6	STR	40'-0"	240
B4	18	5	STR	5'-2"	97
B5	6	5	STR	5'-0"	31
M1	36	10	STR	31'-7"	4893
S1	96	5	3	10'-1"	1010
U1	35	4	4	7'-0"	164
U2	4	4	4	5'-4"	14
U3	8	4	4	5'-8"	30
U4	4	4	4	5'-2"	14
V1	12	10	2	29'-1"	1502
V2	12	10	2	29'-5"	1519
V3	12	10	2	29'-10"	1540
REINFORCING STEEL				LBS.	13,057
SP-1	3	✱✱✱	5	458'-6"	1435
SP-2	1	✱✱	6	862'-2"	576
SP-3	1	✱✱	6	875'-5"	585
SP-4	1	✱✱	6	888'-7"	594
SPIRAL COLUMN REINFORCING STEEL				LBS.	3,190
DRILLED PIER CONC BREAKDOWN:					
POUR 1 DRILLED PIERS				C.Y.	24.5
3'-6" DIA DRILLED PIERS IN SOIL				LIN.FT.	30.0
3'-6" DIA DRILLED PIERS NOT IN SOIL				LIN.FT.	39.0
CLASS A CONCRETE BREAKDOWN					
POUR #2 COLUMNS				C.Y.	20.0
POUR #3 CAP				C.Y.	22.9
TOTAL CLASS A CONC.				C.Y.	42.9
SID INSPECTIONS				EA.	1
CSL TUBES				LIN.FT.	306.0
CSL TESTING				EA.	1

PROJECT NO. R-0623

MONTGOMERY COUNTY

STATION: 123+82.50 -L-

SHEET 3 OF 3

STATE OF NORTH CAROLINA
DEPARTMENT OF TRANSPORTATION
RALEIGH

SUBSTRUCTURE

BENT #2

(WBL)

REVISIONS						SHEET NO.
NO.	BY:	DATE:	NO.	BY:	DATE:	S-36
1			3			TOTAL SHEETS
2			4			82

NORTH CAROLINA PROFESSIONAL SEAL 13406 ENGINEER JOSEPH T. KELVINGTON

DocuSigned by: Joseph T. Kelvington 847C9D37B0774AF... 5/28/2014

Stantec
Stantec Consulting Services Inc.
801 Jones Franklin Road
Suite 300
Raleigh, NC 27606
Tel. (919) 851-6866
Fax. (919) 851-7024
www.stantec.com
License No. F-0672

DRAWN BY : J. L. HENNEKES DATE : 03-06-14
CHECKED BY : J. T. KELVINGTON DATE : 03-11-14
DESIGN ENGINEER OF RECORD: J. T. KELVINGTON DATE : 03-11-14

U:\Structures\Warner Creek\Drawing\WBL - Bridge 264\Drawing\Final\R-0623_SD_B#2_3.dgn 5/12/2014 5:33:40 PM vdoan

STR. #1