DocuSign Envelope ID: 31C928B9-C923-48C2-A4E7-966F51E022C3

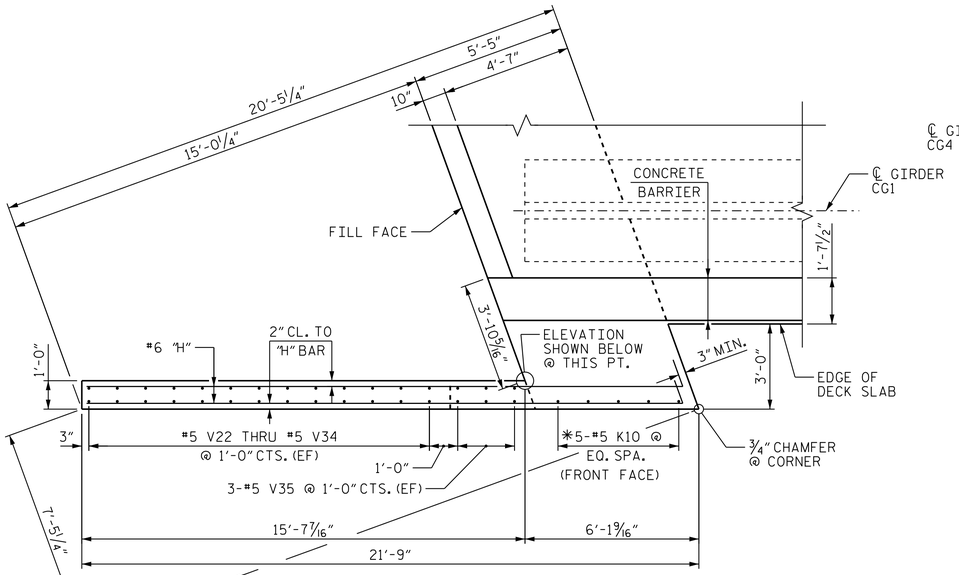

PLAN OF LEFT WING (W3)

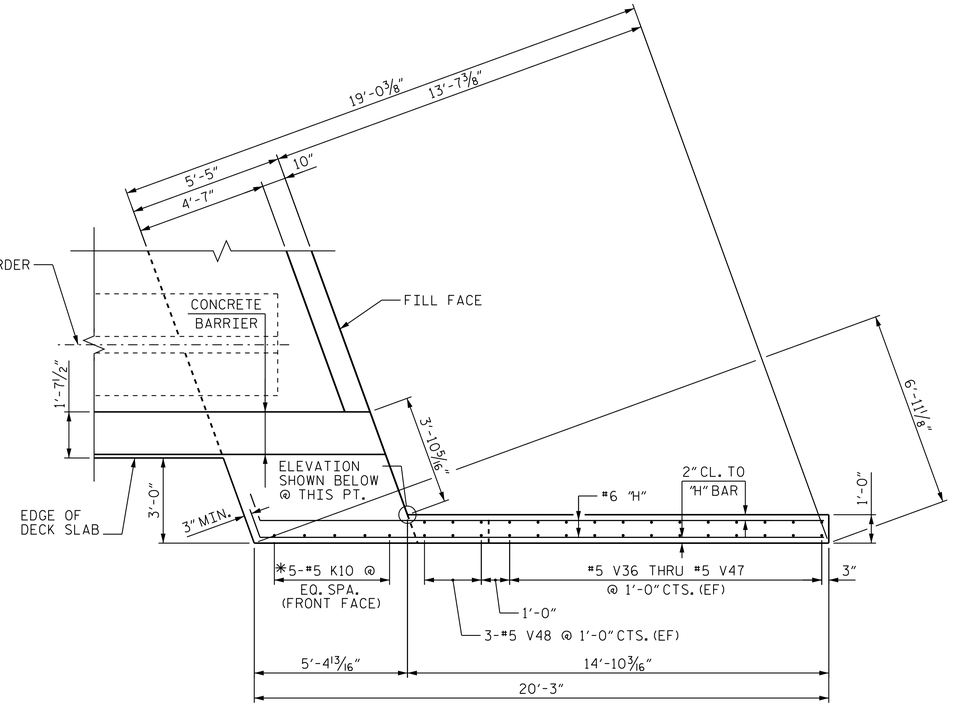

PLAN OF RIGHT WING (W4)

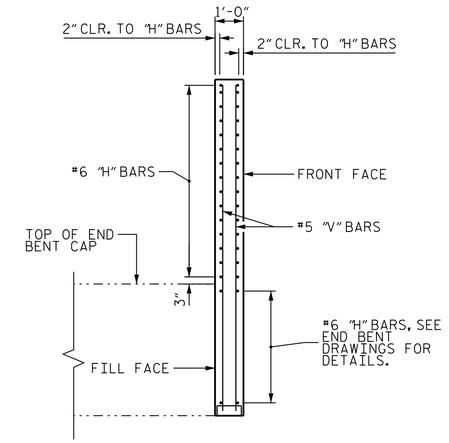

SECTION E-E

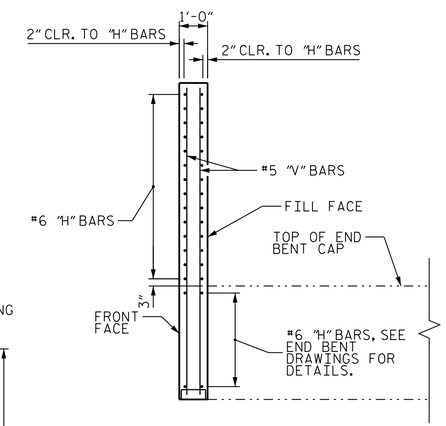

SECTION F-F

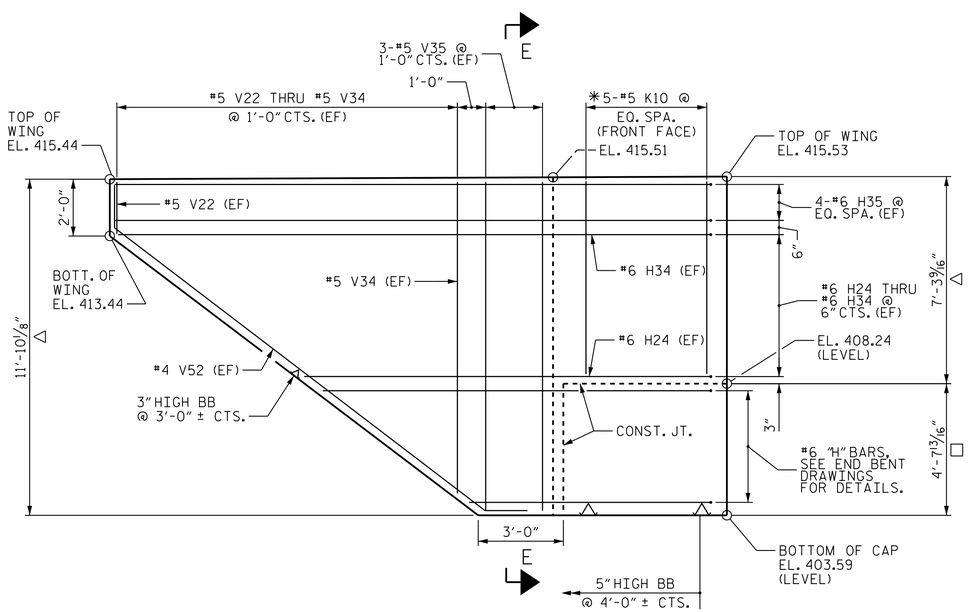

ELEVATION OF LEFT WING (W3)

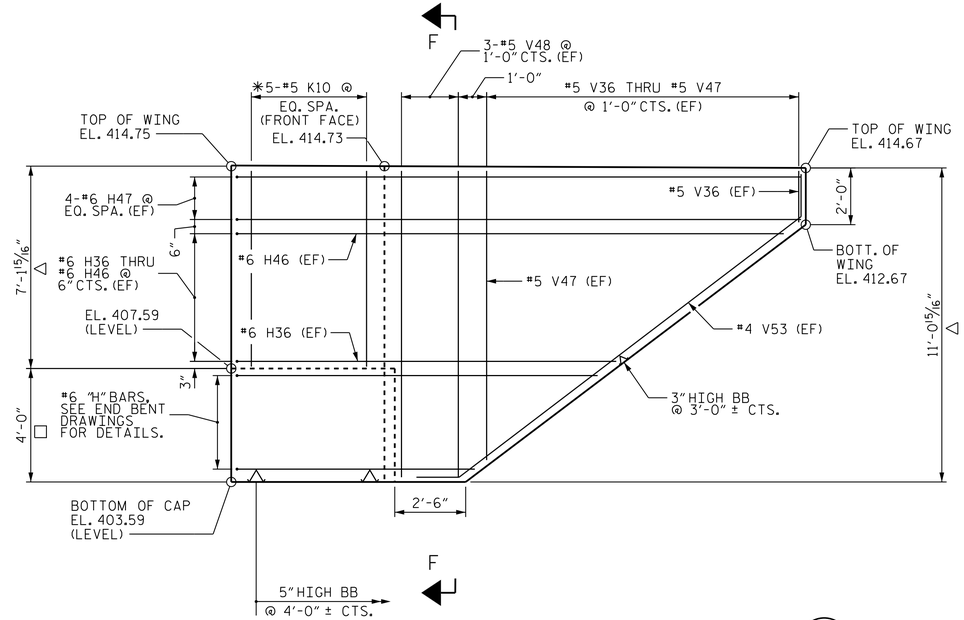

ELEVATION OF RIGHT WING (W4)

NOTES

* SEE "PLAN OF SPAN DETAILS - DIAPHRAGMS" SHT. 1 OF 3
□ END BENT CAP - SUBSTRUCTURE POUR 1
△ DIAPHRAGM AND WING WALL - SUPERSTRUCTURE POUR 4
(EF) - DENOTES EACH FACE OF WING WALL

PROJECT NO. R-0623
MONTGOMERY COUNTY
STATION: 339+48.56 -L-

SHEET 1 OF 2

STATE OF NORTH CAROLINA
DEPARTMENT OF TRANSPORTATION
RALEIGH

SUPERSTRUCTURE

PLAN OF SPAN DETAILS
WING WALL (END BENT 2)

(EBL)

REVISIONS						SHEET NO.
NO.	BY:	DATE:	NO.	BY:	DATE:	S-135
1			3			TOTAL SHEETS
2			4			162

STR. #4

Stantec
Stantec Consulting Services Inc.
801 Jones Franklin Road
Suite 300
Raleigh, NC 27606
Tel. (919) 851-6866
Fax. (919) 851-7024
www.stantec.com
License No. F-0672

DRAWN BY : V. E. FRAGA DATE : 03-31-14
CHECKED BY : J. T. KELVINGTON DATE : 03-31-14
DESIGN ENGINEER OF RECORD: J. T. KELVINGTON DATE : 04-01-14

NORTH CAROLINA PROFESSIONAL SEAL 13406 ENGINEER JOSEPH T. KELVINGTON
DocuSigned by: Joseph T. Kelvington 847C9D378077 4AF... 5/7/2014

U:\Structures\Little River\Drawing\EBL - Bridge 32\Final\R-0623_SD_WW_2.dgn 5/27/2014 3:48:14 PM jhagenbush