DocuSign Envelope ID: 60C83F11-8CD5-46D8-86E0-7E92CF678443

REINFORCING BAR SCHEDULE (DECK & DIAPHRAGM)

BAR	NO.	SIZE	TYPE	LENGTH	WEIGHT
*A1	522	5	STR.	40'-0"	21,778
*A101	2	5	STR.	37'-11"	79
*A102	2	5	STR.	36'-8"	76
*A103	2	5	STR.	35'-5"	74
*A104	2	5	STR.	34'-2"	71
*A105	2	5	STR.	32'-11"	69
*A106	2	5	STR.	31'-8"	66
*A107	2	5	STR.	30'-4"	63
*A108	2	5	STR.	29'-1"	61
*A109	2	5	STR.	27'-10"	58
*A110	2	5	STR.	26'-7"	55
*A111	2	5	STR.	25'-4"	53
*A112	2	5	STR.	24'-1"	50
*A113	2	5	STR.	22'-10"	48
*A114	2	5	STR.	21'-7"	45
*A115	2	5	STR.	20'-4"	42
*A116	2	5	STR.	19'-0"	40
*A117	2	5	STR.	17'-9"	37
*A118	2	5	STR.	16'-6"	34
*A119	2	5	STR.	15'-3"	32
*A120	2	5	STR.	14'-0"	29
*A121	2	5	STR.	12'-9"	27
*A122	2	5	STR.	11'-6"	24
*A123	2	5	STR.	10'-3"	21
*A124	2	5	STR.	9'-0"	19
*A125	2	5	STR.	7'-8"	16
*A126	2	5	STR.	6'-5"	13
*A127	2	5	STR.	5'-2"	11
*A128	2	5	STR.	3'-11"	8
*A129	2	5	STR.	2'-8"	6

BAR	NO.	SIZE	TYPE	LENGTH	WEIGHT
A2	522	5	STR.	40'-0"	21,778
A201	2	5	STR.	37'-11"	79
A202	2	5	STR.	36'-8"	76
A203	2	5	STR.	35'-5"	74
A204	2	5	STR.	34'-2"	71
A205	2	5	STR.	32'-11"	69
A206	2	5	STR.	31'-8"	66
A207	2	5	STR.	30'-4"	63
A208	2	5	STR.	29'-1"	61
A209	2	5	STR.	27'-10"	58
A210	2	5	STR.	26'-7"	55
A211	2	5	STR.	25'-4"	53
A212	2	5	STR.	24'-1"	50
A213	2	5	STR.	22'-10"	48
A214	2	5	STR.	21'-7"	45
A215	2	5	STR.	20'-4"	42
A216	2	5	STR.	19'-0"	40
A217	2	5	STR.	17'-9"	37
A218	2	5	STR.	16'-6"	34
A219	2	5	STR.	15'-3"	32
A220	2	5	STR.	14'-0"	29
A221	2	5	STR.	12'-9"	27
A222	2	5	STR.	11'-6"	24
A223	2	5	STR.	10'-3"	21
A224	2	5	STR.	9'-0"	19
A225	2	5	STR.	7'-8"	16
A226	2	5	STR.	6'-5"	13
A227	2	5	STR.	5'-2"	11
A228	2	5	STR.	3'-11"	8
A229	2	5	STR.	2'-8"	6

BAR	NO.	SIZE	TYPE	LENGTH	WEIGHT
*B1	145	5	STR.	52'-7"	7,952
*B2	152	5	STR.	52'-2"	8,270
B3	275	5	STR.	52'-4"	15,011
*B4	104	5	STR.	17'-0"	1,844
*G1	4	5	STR.	22'-7"	94
K1	30	4	STR.	12'-9"	256
K2	18	4	STR.	9'-6"	114
K3	36	4	STR.	10'-7"	255
K4	18	4	4	9'-9"	117
K5	18	4	STR.	8'-2"	98
K6	4	4	STR.	5'-8"	15
K7	8	4	STR.	6'-3"	33
K8	4	4	STR.	5'-10"	16
K9	4	4	STR.	5'-5"	14
K10	30	4	STR.	17'-5"	349
K11	20	4	STR.	6'-9"	90
K12	20	4	STR.	5'-6"	73
S1	60	4	3	7'-9"	311
S2	228	4	2	2'-8"	406
*S3	80	4	5	10'-5"	557
*S4	74	4	5	8'-5"	416
U1	48	4	1	13'-0"	417
U2	48	4	4	12'-10"	411
U3	20	4	4	15'-3"	204

BAR TYPES

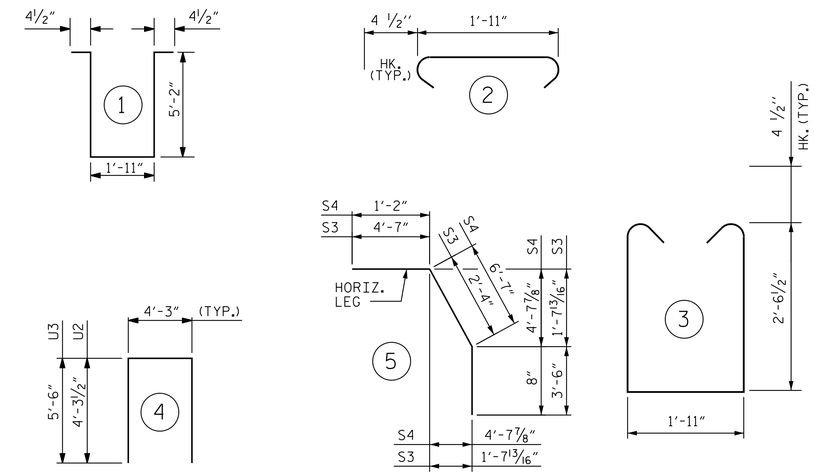

ALL BAR DIMENSIONS ARE OUT TO OUT

SUPERSTRUCTURE BILL OF MATERIAL

SPANS	CLASS AA CONCRETE	REINFORCING STEEL	EPOXY COATED REINFORCING STEEL	REINFROCED CONCRETE DECK SLAB
	(CU. YDS.)	(LBS.)	(LBS.)	(SQ. FT.)
"A", "B", AND "C"	458.9	43,426	42,138	10,285
TOTALS**	458.9	43,426	42,138	10,285

** QUANTITIES FOR BARRIER RAIL ARE NOT INCLUDED

* = EPOXY COATED REINF. STEEL

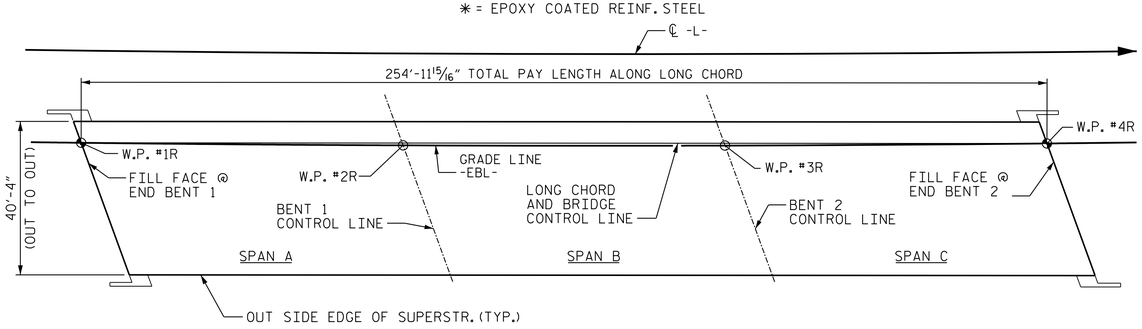

LAYOUT FOR COMPUTING AREA OF REINFORCED CONCRETE DECK SLAB

(SQ. FT. = 10,285)

SUPERSTRUCTURE REINFORCING STEEL LENGTHS ARE BASED ON THE FOLLOWING MINIMUM SPLICE LENGTHS

BAR SIZE	SUPERSTRUCTURE EXCEPT APPROACH SLABS, PARAPET, AND BARRIER RAIL		APPROACH SLABS		PARAPET AND BARRIER RAIL
	EPOXY COATED	UNCOATED	EPOXY COATED	UNCOATED	
#4	2'-0"	1'-9"	2'-0"	1'-9"	2'-9"
#5	2'-6"	2'-2"	2'-6"	2'-2"	3'-5"
#6	3'-0"	2'-7"	3'-10"	2'-7"	4'-4"
#7	5'-3"	3'-6"			
#8	6'-10"	4'-7"			

GROOVING BRIDGE FLOORS

APPROACH SLABS	1,642 SQ.FT.
BRIDGE DECK	8,678 SQ.FT.
TOTAL	10,320 SQ.FT.

CLASS AA CONC. BREAKDOWN

POUR 1	126.2 C.Y.
POUR 2	127.3 C.Y.
POUR 3	96.8 C.Y.
POUR 4	109.6 C.Y.
TOTAL CLASS AA CONC.	458.9 C.Y.

PROJECT NO. R-0623

MONTGOMERY COUNTY

STATION: 123+82.50 -L-

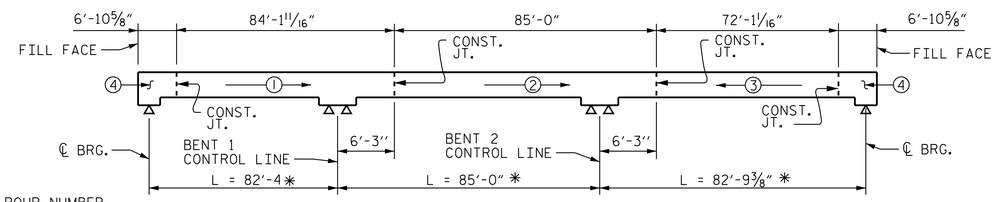

KEY

(#) = INDICATES POUR NUMBER AND DIRECTION OF POUR

L = LENGTH OF EACH SPAN

3 SPANS

* DIMENSIONS ALONG LONG CHORD AND BRIDGE CONTROL LINE

POURING SEQUENCE-PRESTRESSED CONCRETE SUPERSTRUCTURE

(CONTINUOUS FOR LIVE LOAD)

Stantec
Stantec Consulting Services Inc.
801 Jones Franklin Road
Suite 300
Raleigh, NC 27606
Tel. (919) 851-6866
Fax. (919) 851-7024
www.stantec.com
License No. F-0672

DRAWN BY : V. E. FRAGA DATE : 02-09-14
CHECKED BY : J. T. KELVINGTON DATE : 03-04-14
DESIGN ENGINEER OF RECORD: J. T. KELVINGTON DATE : 03-11-14

NORTH CAROLINA PROFESSIONAL SEAL 13406 ENGINEER JOSEPH T. KELVINGTON
DocuSigned by: Joseph T. Kelvington 9/28/2014
847C0D3780774AF...

STATE OF NORTH CAROLINA
DEPARTMENT OF TRANSPORTATION
RALEIGH

GENERAL DRAWING
SUPERSTRUCTURE
BILL OF MATERIALS

(EBL)

REVISIONS						SHEET NO.
NO.	BY:	DATE:	NO.	BY:	DATE:	S-68
1			3			TOTAL SHEETS
2			4			82

STR. #2

U:\Structures\Warner Creek\Drawing\EBL - Bridge 265\Drawing\Final\R-0623_SD_BM_1.dgn 5/12/2014 5:43:07 PM vdoan