DocuSign Envelope ID: E6618080-E6D8-467D-B842-BC4A0736B9E5

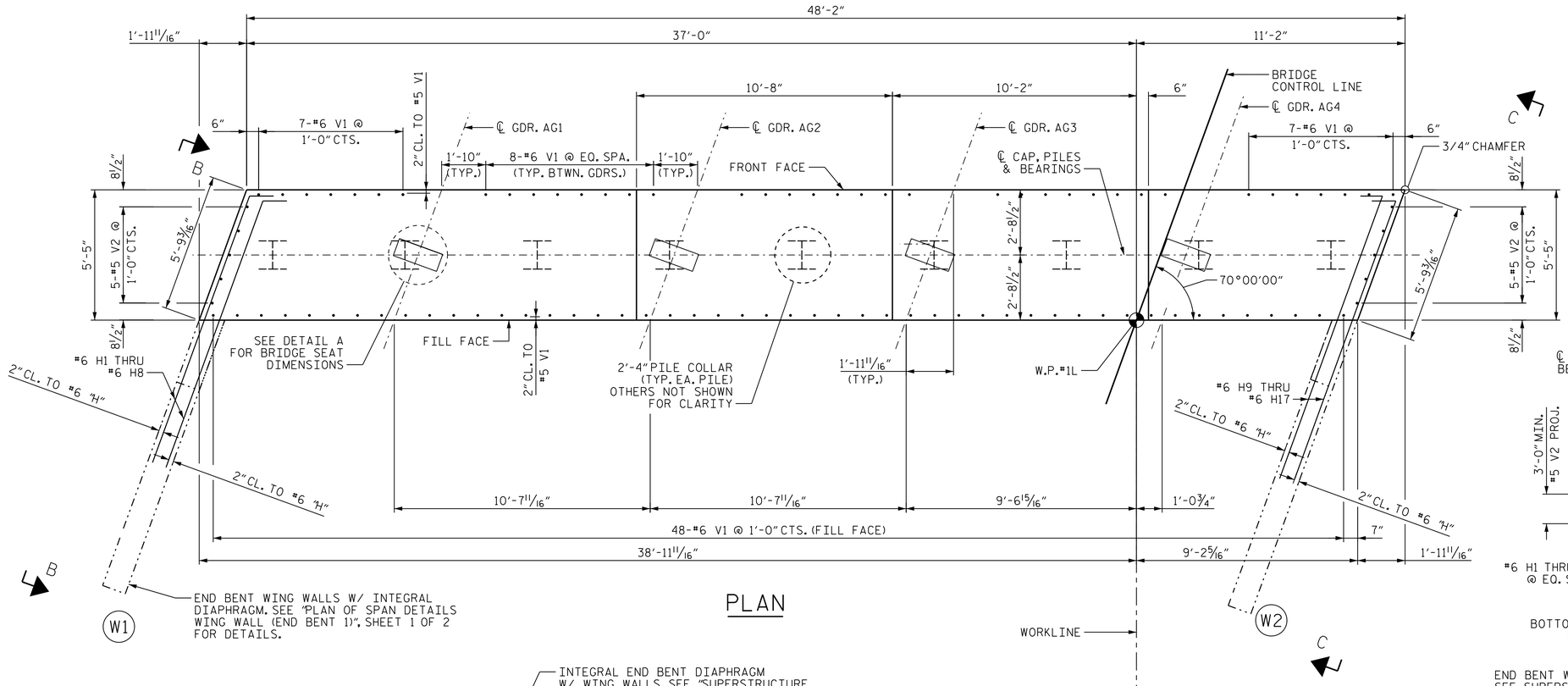

PLAN

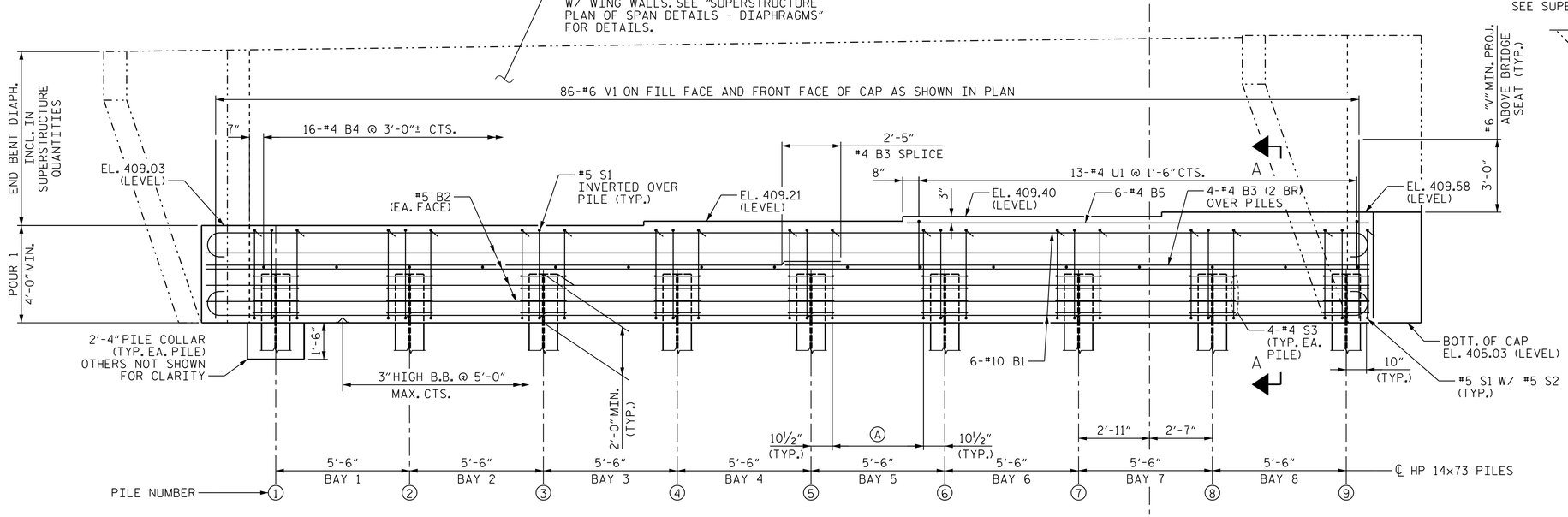

ELEVATION

Ⓐ 6-#5 S1 W/ #5 S2 @ 9" CTS. (TYP. EA. BAY)

NOTES

INSTALL THE 4" DIA. DRAIN PIPE THROUGH THE WING WALL AS REQUIRED FOR REINFORCED BRIDGE APPROACH FILLS. SEE THE ROADWAY PLANS. REINFORCING STEEL IN THE WING WALL MAY BE SHIFTED AS NECESSARY TO CLEAR THE DRAIN PIPE.

2 BR DENOTES 2 BAR RUN

EF DENOTES EACH FACE OF WING WALL

CHAMFERS ARE NOT REQUIRED EXCEPT AS NOTED.

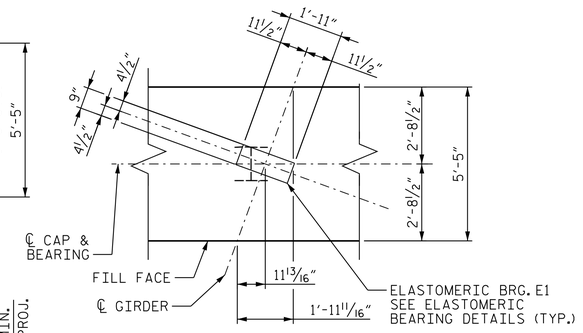

DETAIL A

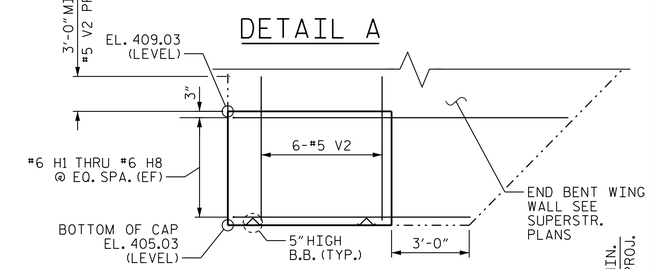

VIEW B-B

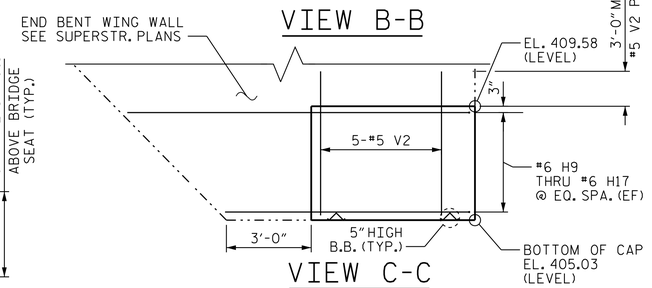

VIEW C-C

PROJECT NO. R-0623

MONTGOMERY COUNTY

STATION: 339+48.56 -L-

SHEET 1 OF 2

STATE OF NORTH CAROLINA
DEPARTMENT OF TRANSPORTATION
RALEIGH

SUBSTRUCTURE

END BENT 1

(WBL)

REVISIONS						SHEET NO.
NO.	BY:	DATE:	NO.	BY:	DATE:	S-110
1			3			TOTAL SHEETS
2			4			162

Stantec
Stantec Consulting Services Inc.
801 Jones Franklin Road
Suite 300
Raleigh, NC 27606
Tel. (919) 851-6866
Fax. (919) 851-7024
www.stantec.com
License No. F-0672

DRAWN BY :	J. E. HAGENBUSH	DATE :	03-24-14
CHECKED BY :	V. T. DOAN	DATE :	03-31-14
DESIGN ENGINEER OF RECORD:	J. T. KELVINGTON	DATE :	04-01-14

NORTH CAROLINA PROFESSIONAL SEAL 13406 ENGINEER JOSEPH T. KELVINGTON

DocuSigned by: Joseph T. Kelvington 847C9D378077 4AF... 5/27/2014

STR. #3

U:\Structures\Little River\Drawing\WBL - Bridge 266\Final\R-0623_SD_E#1.dgn 5/27/2014 3:55:08 PM Jhagenbush