DocuSign Envelope ID: 0467AB1B-32B1-4334-81D0-7D50B5979B14

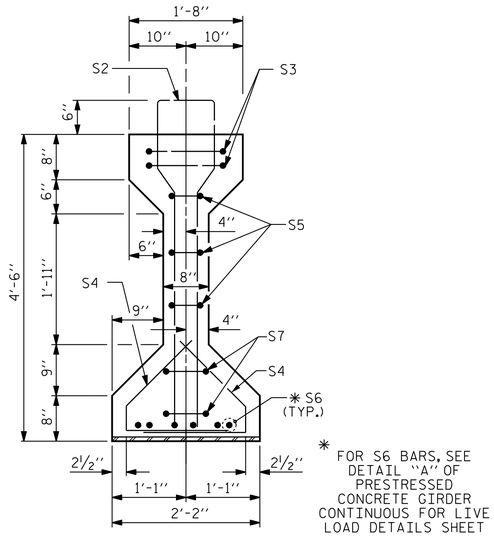

✱ FOR S6 BARS, SEE DETAIL "A" OF PRESTRESSED CONCRETE GIRDER CONTINUOUS FOR LIVE LOAD DETAILS SHEET

SECTION A-A

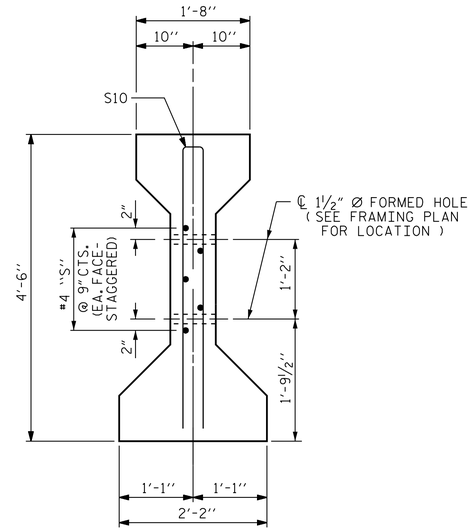

SECTION C-C

(S1 BARS NOT SHOWN)

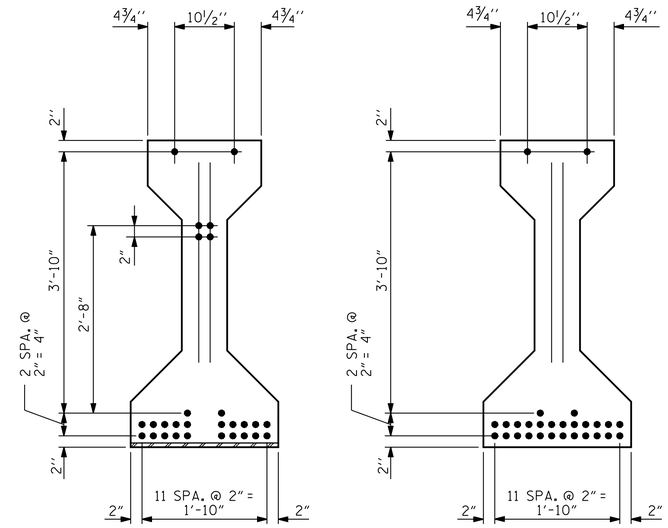

AT END OF GIRDER

AT ℄ OF GIRDER

0.6" Ø LOW RELAXATION STRAND LAYOUT

0.6" Ø L. R. GRADE 270 STRANDS

AREA (SQUARE INCHES)	ULTIMATE STRENGTH (LBS. PER STRAND)	APPLIED PRESTRESS (LBS. PER STRAND)
0.217	58,600	43,950

REINFORCING STEEL FOR ONE GIRDER

BAR	NUMBER	SIZE	TYPE	LENGTH	WEIGHT
S1	24	#4	1	10'-8"	171
S2	10	#5	1	11'-0"	115
S3	4	#4	2	41'-1"	110
S4	148	#4	3	3'-5"	338
S5	6	#4	2	8'-5"	34
✱ S6	12	#5	STR	3'-8"	46
S7	4	#4	2	8'-7"	23
S8	2	#3	STR	1'-10"	2
S9	2	#5	2	8'-8"	18
S10	5	#4	STR	7'-0"	23
S11	12	#4	1	10'-10"	87
S12	64	#4	1	11'-0"	470

✱ NOTE: S6 BARS SHALL BE BENT BEFORE SHIPMENT. HEAT BENDING SHALL NOT BE ALLOWED.

BAR TYPES

ALL BAR DIMENSIONS ARE OUT-TO-OUT

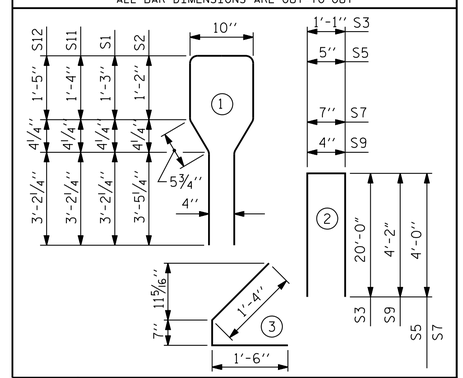

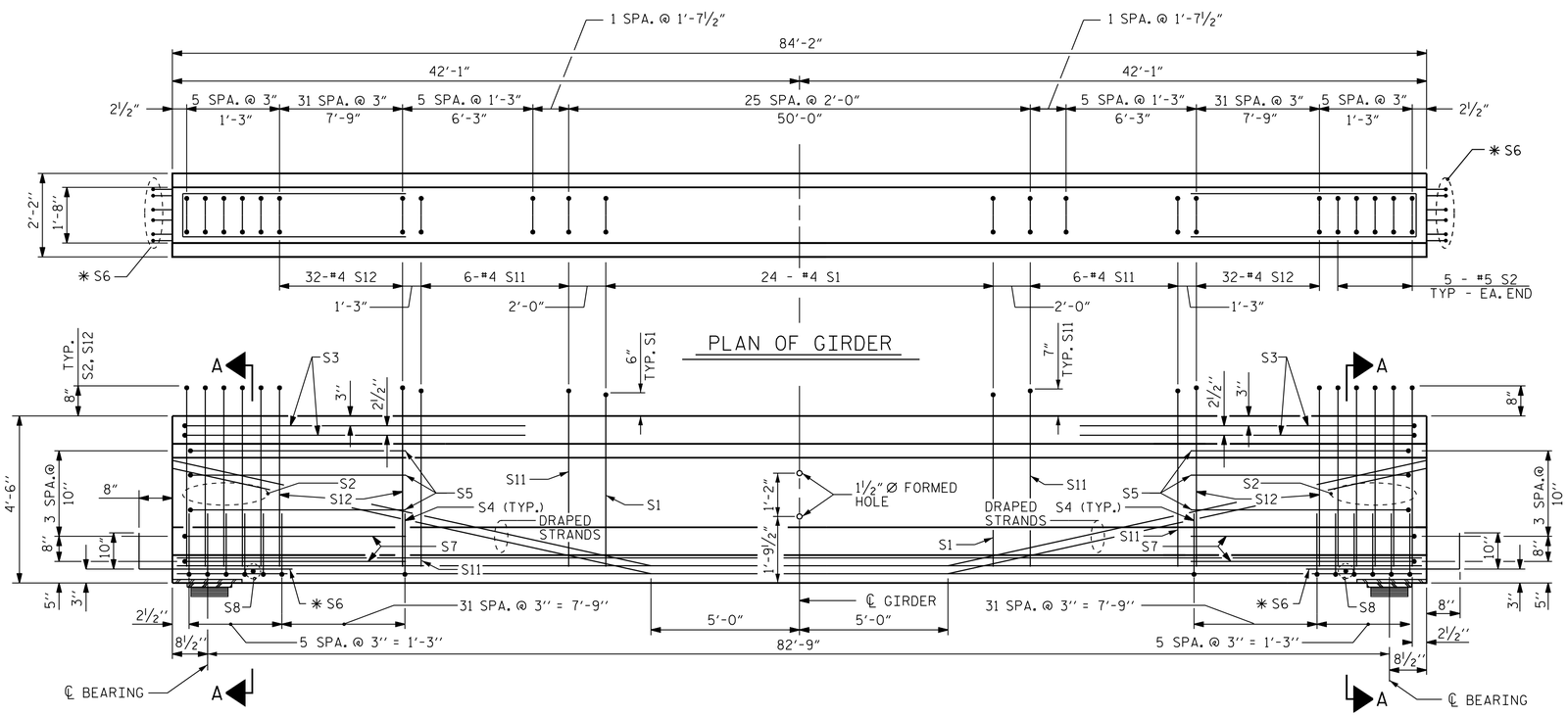

BENT 1

ELEVATION OF GIRDER

(SEE PARTIAL ELEVATION FOR ADDITIONAL "S" BARS)

BENT 2

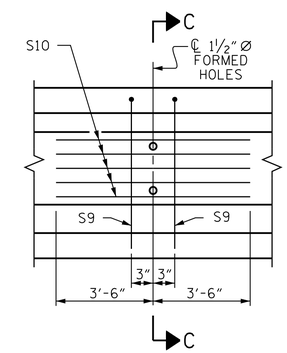

PARTIAL ELEVATION

SHOWING INTERMEDIATE DIAPHRAGM REINFORCING STEEL FOR GIRDER Nos. 1-4

QUANTITIES FOR ONE GIRDER

	REINFORCING STEEL	8000 PSI CONCRETE	0.6" Ø L. R. STRANDS
	LB.	C.Y.	No.
	1437	17.1	28

GIRDERS REQUIRED

NUMBER	LENGTH	TOTAL LENGTH
4	84'-2"	336'-8"

PROJECT NO. R-0623

MONTGOMERY COUNTY

STATION: 123+82.50 -L-

SHEET 2 OF 4

STATE OF NORTH CAROLINA
DEPARTMENT OF TRANSPORTATION
RALEIGH

STANDARD
AASHTO TYPE IV
PRESTRESSED CONCRETE GIRDER
CONTINUOUS FOR LIVE LOAD
(SPAN B)
(WBL)

REVISIONS						SHEET NO.
NO.	BY:	DATE:	NO.	BY:	DATE:	S-17
1			3			TOTAL SHEETS
2			4			82

STR. #1

STD. NO. PCG6

DESIGN ENGINEER OF RECORD: J. T. KELVINGTON DATE: 03-11-14
ASSEMBLED BY: J. B. GEILE DATE: 12-04-13
CHECKED BY: J. T. KELVINGTON DATE: 12-05-13
DRAWN BY: ELR 8/91
CHECKED BY: GRP 8/91
REV. 10/17/00R RWW/LES
REV. 5/1/06R TLA/GM
REV. 10/1/11 MAA/GM

Stantec

Stantec Consulting Services Inc.
801 Jones Franklin Road
Suite 300
Raleigh, NC 27606
Tel. (919) 851-6866
Fax. (919) 851-7024
www.stantec.com
License No. F-0672

NORTH CAROLINA PROFESSIONAL SEAL 13406 ENGINEER JOSEPH T. KELVINGTON

DocuSigned by: Joseph T. Kelvington 847C9D378077 4AF... 5/28/2014

U:\Structures\Warner Creek\Drawing\WBL - Bridge 264\Drawing\Final\R-0623_SD_G*2.dgn 2/28/2014 5:33:10 PM vdoan