DocuSign Envelope ID: 60C83F11-8CD5-46D8-86E0-7E92CF678443

NOTES:

REMOVABLE FORMS MAY BE USED IN LIEU OF METAL STAY-IN-PLACE FORMS IN ACCORDANCE WITH ARTICLE 420-3 OF THE STANDARD SPECIFICATIONS.

PROVIDE 1¼" HIGH BEAM BOLSTERS UPPER AT 4'-0" CTS. ATOP THE METAL STAY-IN-PLACE FORMS TO SUPPORT THE BOTTOM MAT OF 'A' BARS. WHEN USING REMOVABLE FORMS, PROVIDE CONTINUOUS HIGH CHAIRS FOR METAL DECK (C.H.C.M.) @ 4'-0" CTS. WITH A HEIGHT TO SUPPORT THE BOTTOM MAT OF 'A' BARS A CLEAR DISTANCE OF 2½" ABOVE THE TOP OF THE REMOVABLE FORM.

LONGITUDINAL STEEL MAY BE SHIFTED SLIGHTLY, AS NECESSARY, TO AVOID INTERFERENCE WITH STIRRUPS IN PRESTRESSED CONCRETE GIRDERS.

NO CHAMFER IS REQUIRED ON CORNERS OF GIRDER BUILDUPS.

PREVIOUSLY CAST CONCRETE IN A CONTINUOUS UNIT SHALL HAVE ATTAINED A MINIMUM COMPRESSIVE STRENGTH OF 3,000 PSI BEFORE ADDITIONAL CONCRETE IS CAST IN THE UNIT EXCEPT AS NOTED IN THE PLANS.

#5 G1 BAR MAY BE SHIFTED SLIGHTLY, AS NECESSARY TO CLEAR REINFORCING STEEL AND STIRRUPS.

ALL REINFORCING STEEL IN CONCRETE BARRIER RAILS SHALL BE EPOXY COATED.

A TIME PERIOD OF AT LEAST 30 DAYS SHALL ELAPSE FROM THE TRANSFER OF PRESTRESSING FORCE INTO ANY GIRDER AND THE PLACEMENT OF DECK SLAB CONCRETE IN THE SPANS.

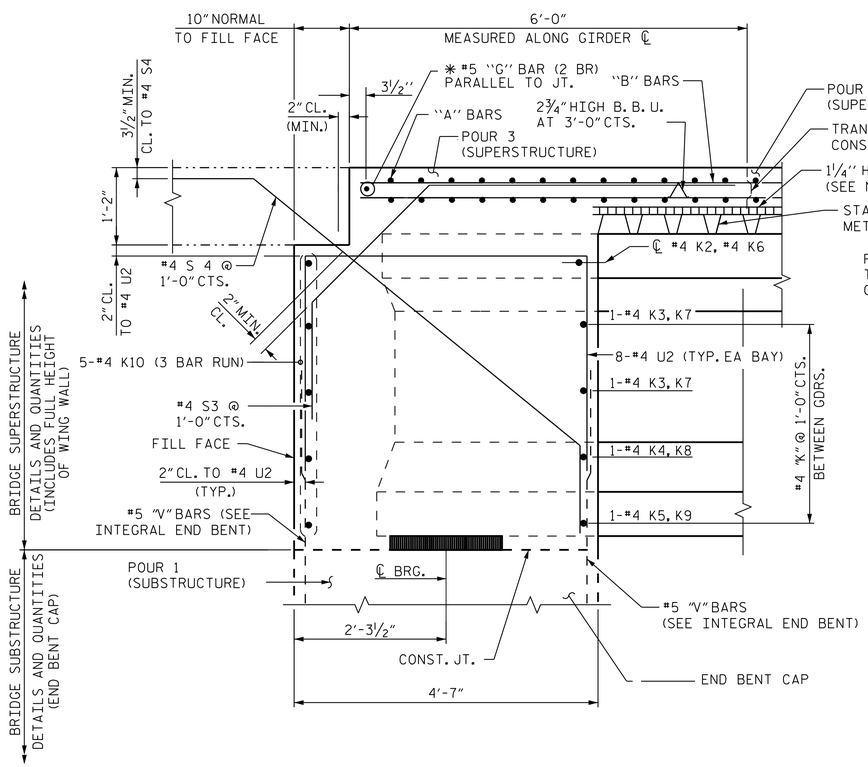

SECTION B-B

SECTION THRU INTEGRAL END BENT DIAPHRAGM
WORK WITH "PLAN OF SPANS," SHEET 2 OF 3

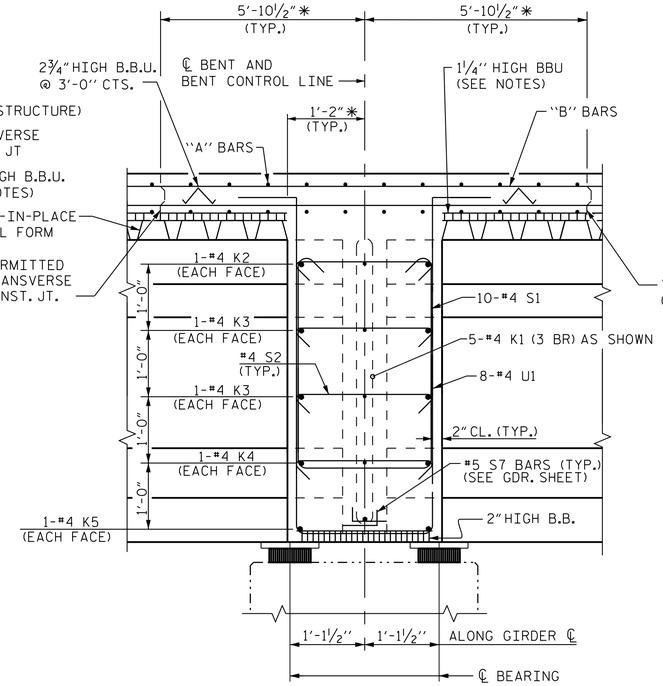

SECTION A-A

SECTION THRU DIAPHRAGM @ INTERIOR BENT
WORK WITH "PLAN OF SPANS," SHEET 2 OF 3

NOTE: 3 BR DENOTES 3 BAR RUN
2 BR DENOTES 2 BAR RUN

✱ NORMAL TO ℄ BENT

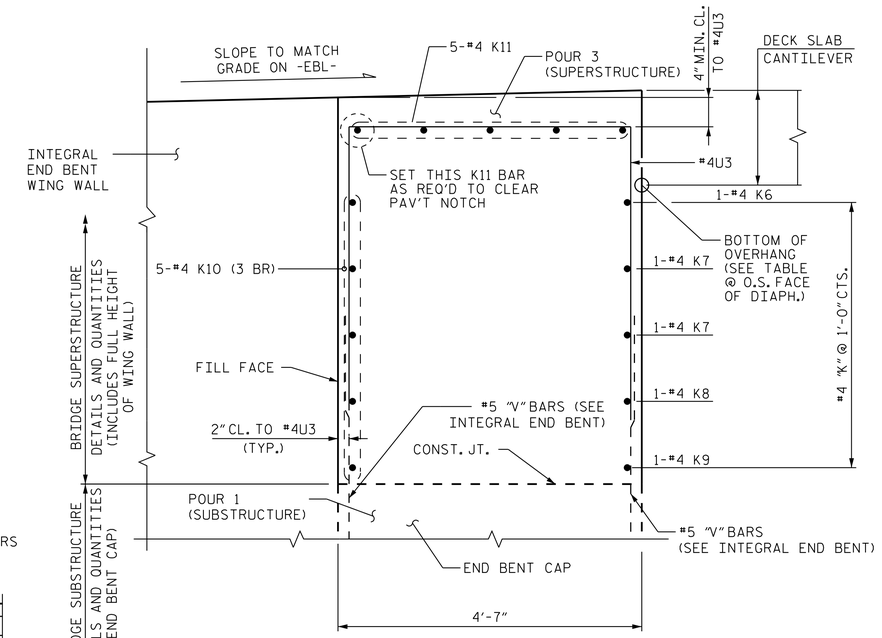

SECTION C-C

SECTION THRU INTEGRAL END BENT DIAPHRAGM
BEYOUND O.S. EDGE OF DECK SLAB.
WORK WITH "PLAN OF SPAN DETAILS - DIAPHRAGMS",
SHEET 1 OF 3

BOTTOM OF OVERHANG ELEVS. @ OUTSIDE EDGE OF SUPERSTR.

OVERHANG	END BENT	ELEV.
LEFT SIDE	1	485.02
RIGHT SIDE	1	484.42
LEFT SIDE	2	490.07
RIGHT SIDE	2	489.71

PROJECT NO. R-0623
MONTGOMERY COUNTY
STATION: 123+82.50 -L-

SHEET 3 OF 3

STATE OF NORTH CAROLINA
DEPARTMENT OF TRANSPORTATION
RALEIGH

SUPERSTRUCTURE

TYPICAL SECTION (DETAILS)

(EBL)

REVISIONS						SHEET NO.
NO.	BY:	DATE:	NO.	BY:	DATE:	S-49
1			3			TOTAL SHEETS
2			4			82

STR. #2

Stantec Consulting Services Inc.
801 Jones Franklin Road
Suite 300
Raleigh, NC 27606
Tel. (919) 851-6866
Fax. (919) 851-7024
www.stantec.com
License No. F-0672

DRAWN BY: M. G. BRADLEY DATE: 06-19-13
CHECKED BY: J. T. KELVINGTON DATE: 09-10-13
DESIGN ENGINEER OF RECORD: J. T. KELVINGTON DATE: 03-11-14

NORTH CAROLINA PROFESSIONAL SEAL 13406 ENGINEER JOSEPH T. KELVINGTON
DocuSigned by: Joseph T. Kelvington 847C9D378077 4AF... 5/28/2014

U:\Structures\Warner Creek\Drawing\EBL - Bridge 265\Drawing\Final\R-0623_SD_TS_3.dgn 5/12/2014 5:42:27 PM vdoan