DocuSign Envelope ID: E6618080-E6D8-467D-B842-BC4A0736B9E5

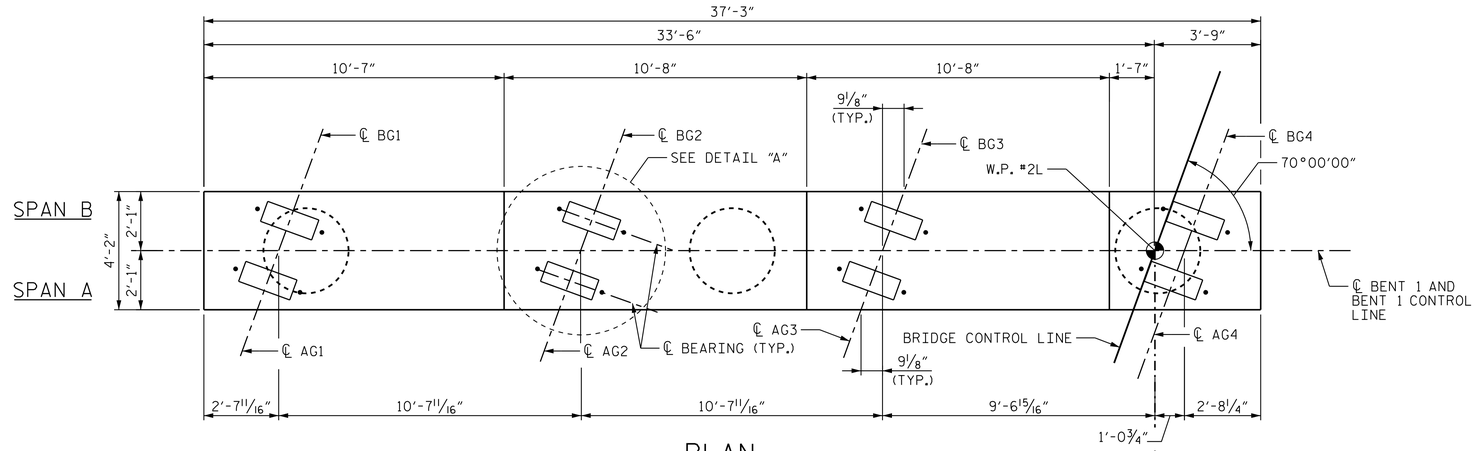

PLAN

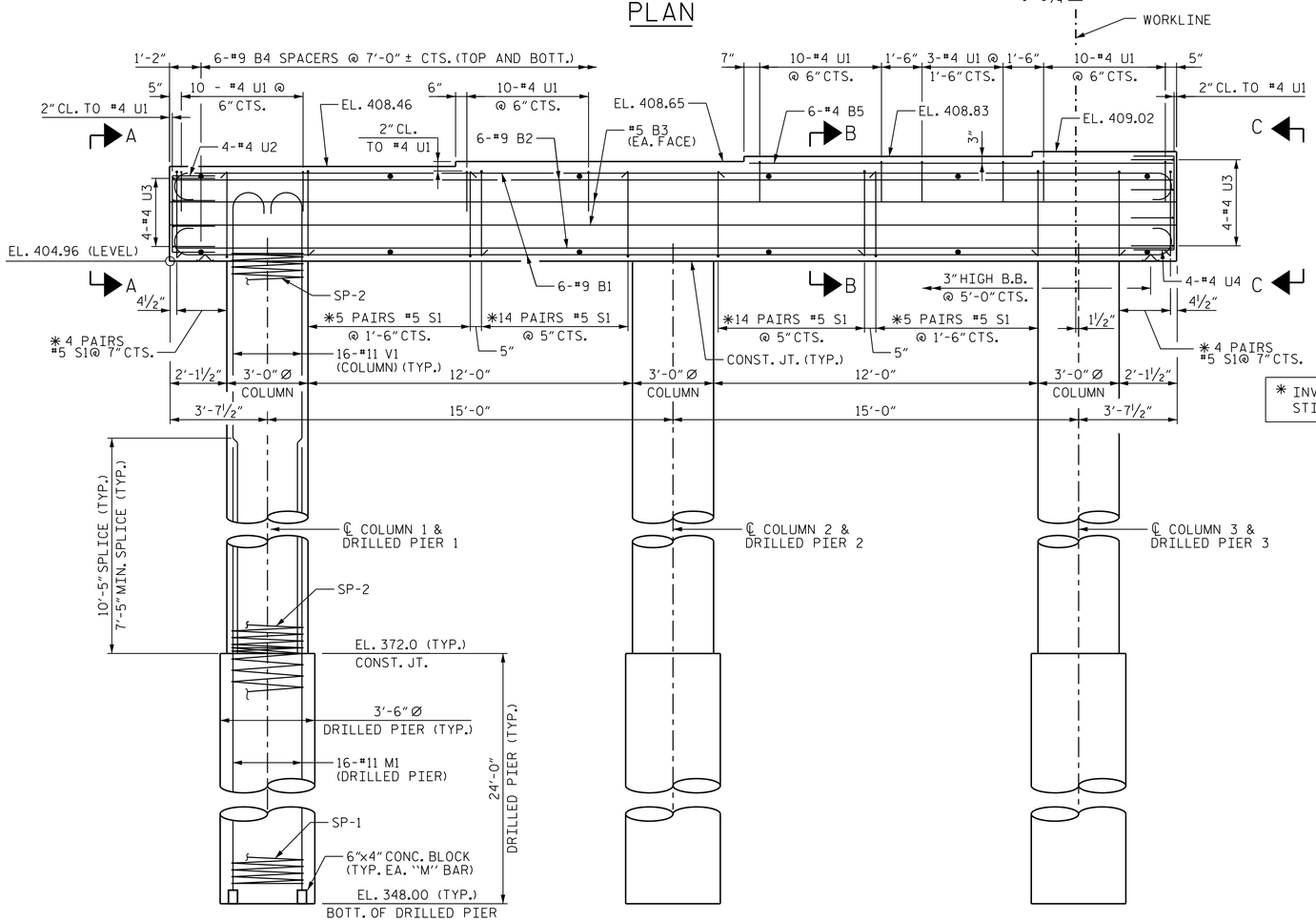

* INVERT EACH ALTERNATE STIRRUP PAIR

ELEVATION

NOTES:

STIRRUPS IN CAP MAY BE SHIFTED AS NECESSARY TO CLEAR ANCHOR BOLTS.

HOOKS ON "V" BARS MAY BE TURNED AS NECESSARY FOR PLACING REINF. STEEL.

ALL STEEL IN THE DRILLED PIERS IS INCLUDED IN THE PAY ITEMS FOR "REINFORCING STEEL" AND "SPIRAL COLUMN REINFORCING STEEL".

THE CONTRACTOR'S ATTENTION IS CALLED TO THE FACT THAT THE LONGITUDINAL REINFORCEMENT FOR THE DRILLED PIERS IS DETAILED WITH 3 FEET OF EXTRA LENGTH.

FOR SECTION A-A, SECTION B-B, AND SECTION C-C, SEE BENT 1 SHT. 3 OF 3.

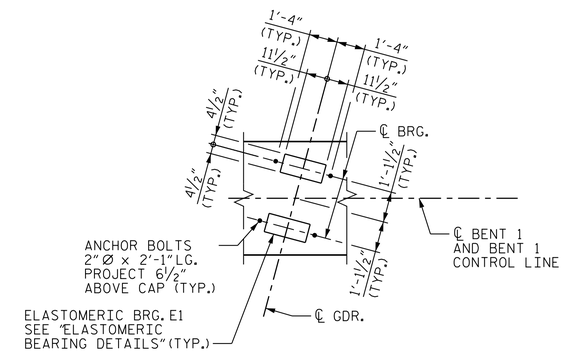

DETAIL A

PROJECT NO. R-0623

MONTGOMERY COUNTY

STATION: 339+48.56 -L-

SHEET 1 OF 3

STATE OF NORTH CAROLINA
DEPARTMENT OF TRANSPORTATION
RALEIGH

SUBSTRUCTURE

BENT #1

(WBL)

REVISIONS						SHEET NO.
NO.	BY:	DATE:	NO.	BY:	DATE:	S-112
1			3			TOTAL SHEETS
2			4			162

Stantec
Stantec Consulting Services Inc.
801 Jones Franklin Road
Suite 300
Raleigh, NC 27606
Tel. (919) 851-6866
Fax. (919) 851-7024
www.stantec.com
License No. F-0672

DRAWN BY : J. B. GEILE	DATE : 03-20-14	DESIGN ENGINEER OF RECORD: J. T. KELVINGTON	DATE : 04-01-14
CHECKED BY : V. T. DOAN	DATE : 03-31-14		

NORTH CAROLINA PROFESSIONAL SEAL 13406 ENGINEER JOSEPH T. KELVINGTON

DocuSigned by: Joseph T. Kelvington 847C9D378077 4AF... 5/27/2014

STR. #3

U:\Structures\Little River\Drawing\WBL - Bridge 266\Final\R-0623_SD_B#-1.dgn 5/27/2014 3:55:11 PM Jhagenbush