DocuSign Envelope ID: 60C83F11-8CD5-46D8-86E0-7E92CF678443

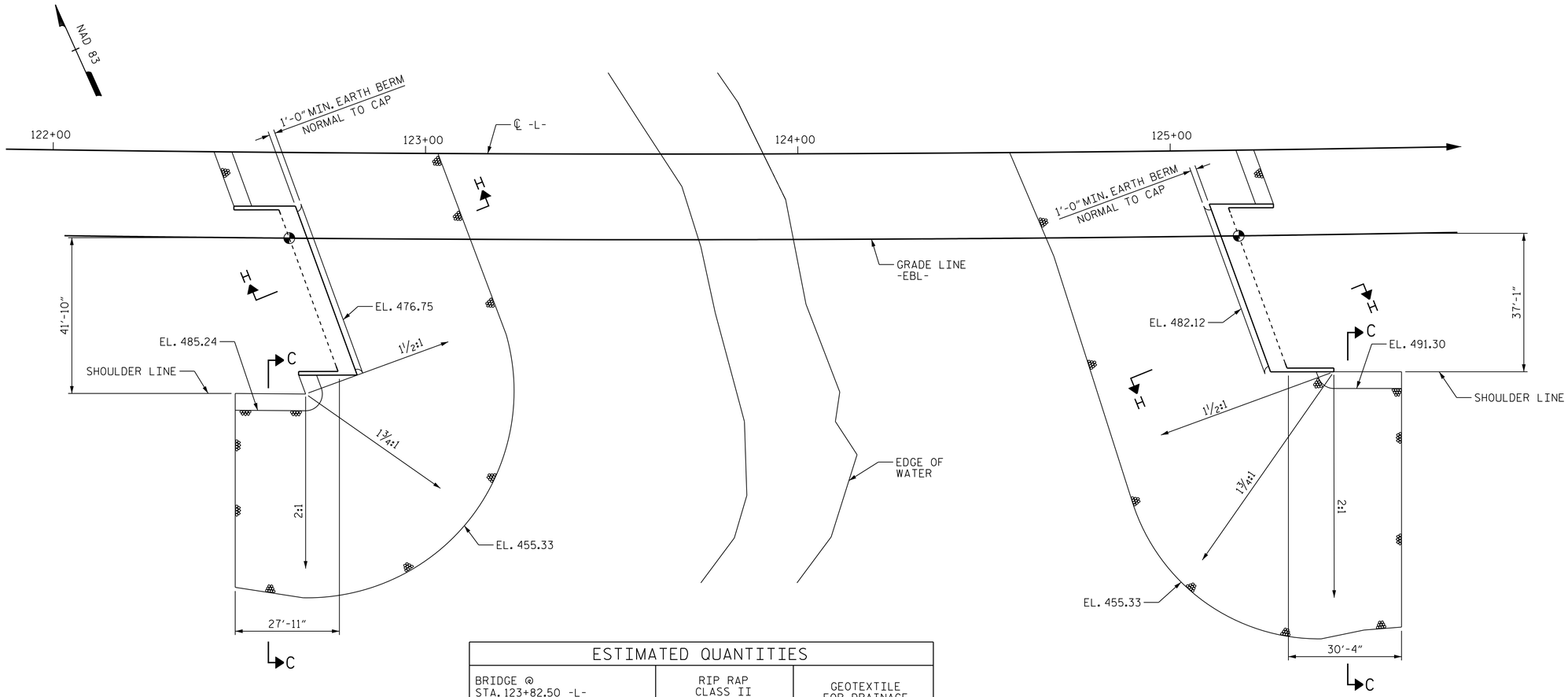

END BENT 1

END BENT 2

ESTIMATED QUANTITIES		
BRIDGE @ STA. 123+82.50 -L-	RIP RAP CLASS II (2'-0" THICK)	GEOTEXTILE FOR DRAINAGE
	TONS	SQUARE YARDS
END BENT 1	783	870
END BENT 2	835	927

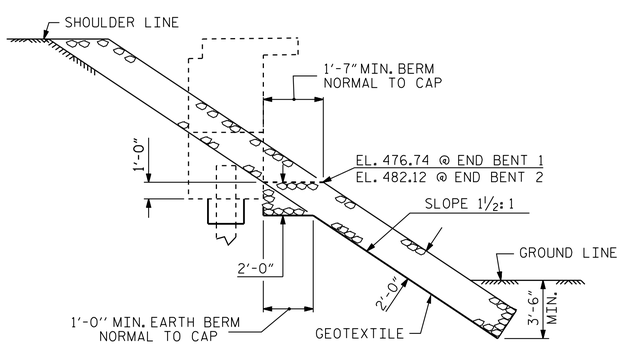

SECTION H-H

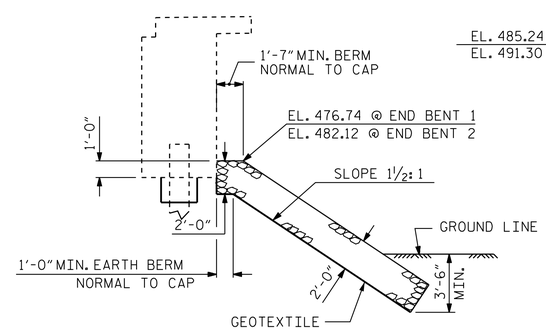

℄ SECTION BERM RIP RAPPED

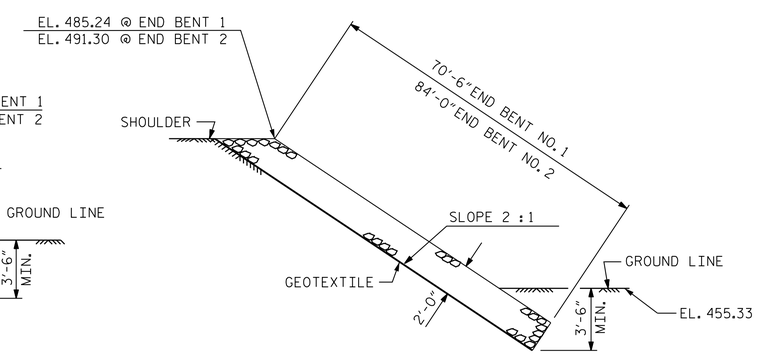

SECTION C-C

PROJECT NO. R-0623

MONTGOMERY COUNTY

STATION: 123+82.50 -L-

STATE OF NORTH CAROLINA
DEPARTMENT OF TRANSPORTATION
RALEIGH
STANDARD

RIP RAP DETAILS

(EBL)

REVISIONS								SHEET NO.
NO.	BY:	DATE:	NO.	BY:	DATE:			S-80
1			3					TOTAL SHEETS
2			4					82

Stantec
Stantec Consulting Services Inc.
801 Jones Franklin Road
Suite 300
Raleigh, NC 27606
Tel. (919) 851-6866
Fax. (919) 851-7024
www.stantec.com
License No. F-0672

DRAWN BY : J. B. GEILE DATE : 03-04-14
CHECKED BY : J. T. KELVINGTON DATE : XX-XX-14
DESIGN ENGINEER OF RECORD: J. T. KELVINGTON DATE : 03-11-14

NORTH CAROLINA PROFESSIONAL SEAL 13406 ENGINEER JOSEPH T. KELVINGTON
DocuSigned by: Joseph T. Kelvington 847C9D37B0774AF... 5/28/2014

STR. #2

U:\Structures\Warner Creek\Drawing\EBL - Bridge 265\Drawing\Final\R-0623_SD_RR.dgn 5/12/2014 5:43:25 PM vdoan