DocuSign Envelope ID: E6618080-E6D8-467D-B842-BC4A0736B9E5

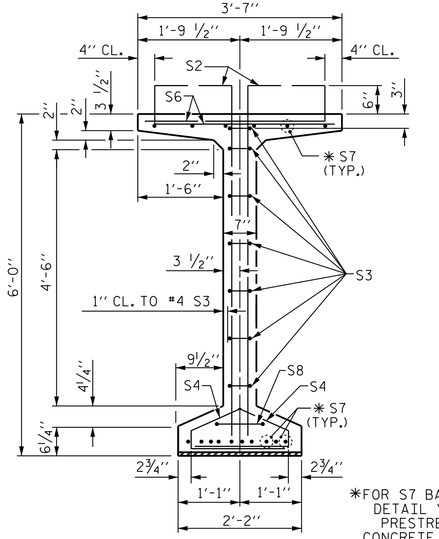

✱FOR S7 BARS. SEE DETAIL "C" OF PRESTRESSED CONCRETE GIRDER CONTINUOUS FOR LIVE LOAD DETAILS SHEET

SECTION A-A

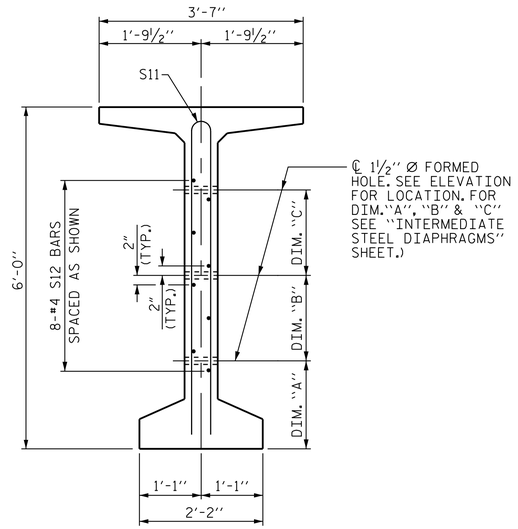

SECTION C-C

(S1, S6 AND S9 BARS NOT SHOWN)

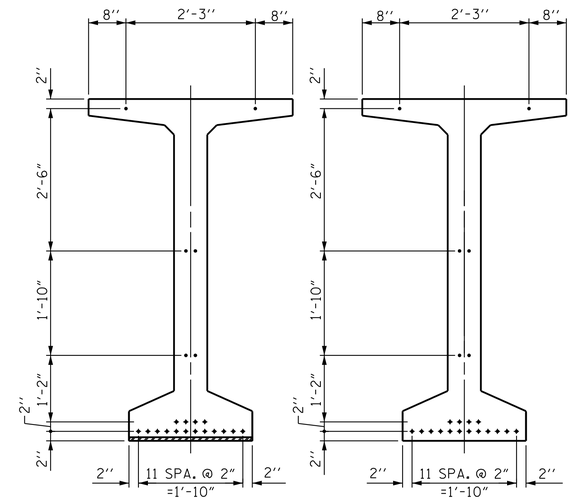

AT END OF GIRDER

AT ℄ OF GIRDER

0.6" Ø LOW RELAXATION STRAND LAYOUT

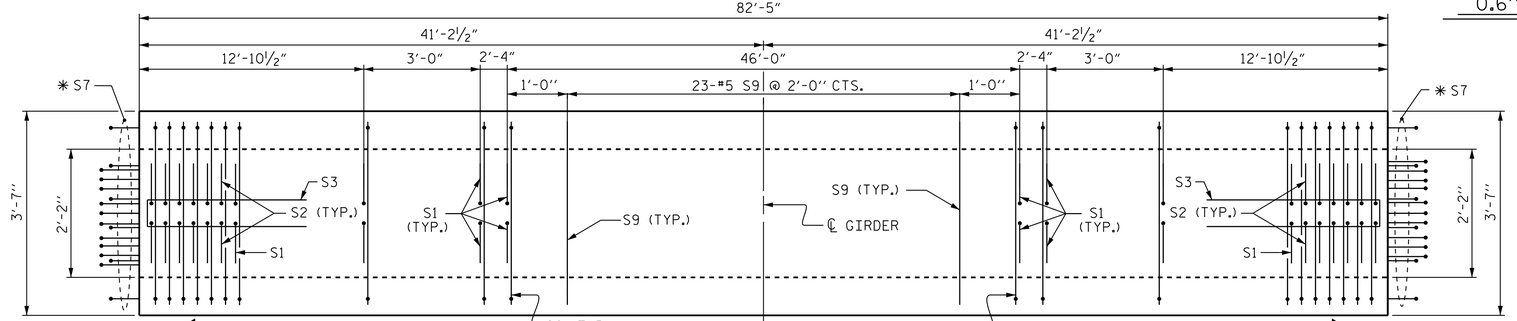

PLAN OF GIRDER

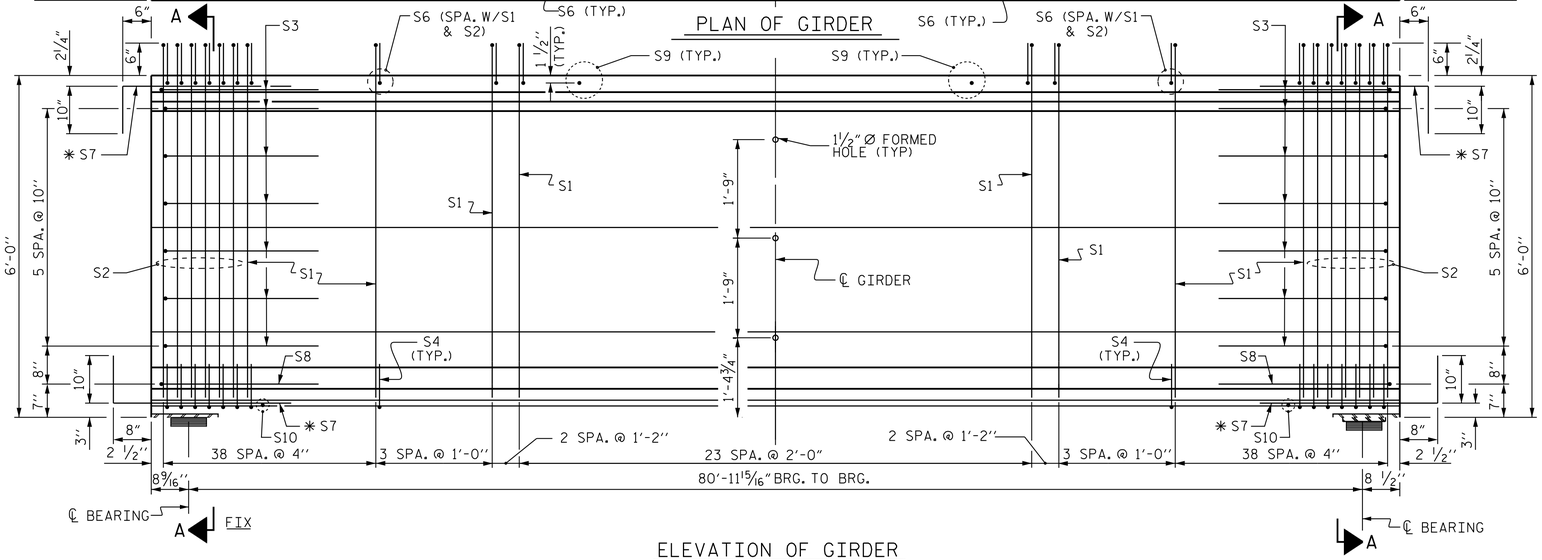

ELEVATION OF GIRDER

INTEGRAL END BENT

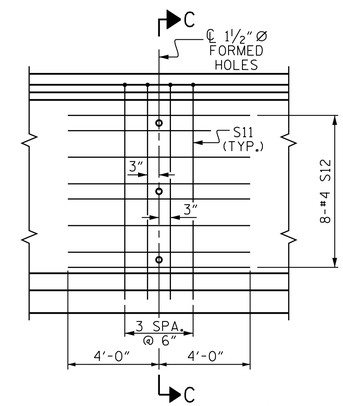

PARTIAL ELEVATION

SHOWING INTERMEDIATE STEEL DIAPHRAGM REINFORCING STEEL FOR GIRDER Nos. 1-4

0.6" Ø L. R. GRADE 270 STRANDS

AREA (SQUARE INCHES)	ULTIMATE STRENGTH (LBS. PER STRAND)	APPLIED PRESTRESS (LBS. PER STRAND)
0.217	58,600	43,950

REINFORCING STEEL FOR ONE GDR

BAR	NUMBER	SIZE	TYPE	LENGTH	WEIGHT
S1	200	#4	1	6'-10"	913
S2	24	#5	1	6'-10"	171
S3	14	#4	2	8'-5"	79
S4	156	#4	3	3'-0"	313
S6	224	#5	4	4'-4"	1012
✱ S7	32	#5	STR	3'-8"	122
S8	2	#5	2	9'-0"	19
S9	23	#5	STR	3'-3"	92
S10	2	#3	STR	1'-10"	1
S11	4	#5	5	11'-6"	48
S12	8	#4	STR	8'-0"	43

✱ NOTE: S7 BARS SHALL BE BENT BEFORE SHIPMENT. HEAT BENDING SHALL NOT BE ALLOWED.

BAR TYPES

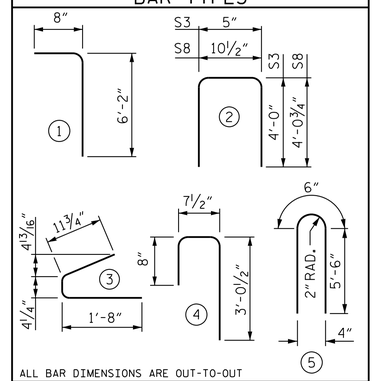

ALL BAR DIMENSIONS ARE OUT-TO-OUT

QUANTITIES FOR ONE GIRDER

	REINFORCING STEEL	7,000 PSI CONCRETE	0.6" Ø L.R. STRANDS
SPAN	LB.	C.Y.	No.
C	2799	17.7	22

GIRDERS REQUIRED

NUMBER	LENGTH	TOTAL LENGTH
4	82'-5"	329'-8"

PROJECT NO. R-0623

MONTGOMERY COUNTY

STATION: 339+48.56 -L-

SHEET 3 OF 4

STATE OF NORTH CAROLINA
DEPARTMENT OF TRANSPORTATION
RALEIGH

STANDARD

72" PRESTRESSED CONCRETE MODIFIED BULB TEE CONTINUOUS FOR LIVE LOAD
(SPAN C)
(WBL)

REVISIONS								SHEET NO.
NO.	BY:	DATE:	NO.	BY:	DATE:			S-99
1			3					TOTAL SHEETS
2			4					162

NORTH CAROLINA PROFESSIONAL SEAL 13406 ENGINEER JOSEPH T. KELVINGTON

DocuSigned by: Joseph T. Kelvington 847C9D3780774AF... 5/27/2014

ASSEMBLED BY : J. B. GEILE	DATE : 03/05/14		
CHECKED BY : J. T. KELVINGTON	DATE : 03/06/14		
DRAWN BY : EEM 2/6/97	REV. 5/1/06R	TLA/GM	DESIGN ENGINEER OF RECORD: J. T. KELVINGTON DATE : 03-14-14
CHECKED BY : VAP 2/6/97	REV. 10/1/11	MAA/GM	
	REV. 6/13	MAA/GM	

Stantec
Stantec Consulting Services Inc.
801 Jones Franklin Road
Suite 300
Raleigh, NC 27606
Tel. (919) 851-6866
Fax. (919) 851-7024
www.stantec.com
License No. F-0672

U:\Structures\Little River\Drawing\WBL - Bridge 266\Final\R-0623_SD_G*3.dgn 5/27/2014 3:54:39 PM jhagenbush