DocuSign Envelope ID: 0467AB1B-32B1-4334-81D0-7D50B5979B14

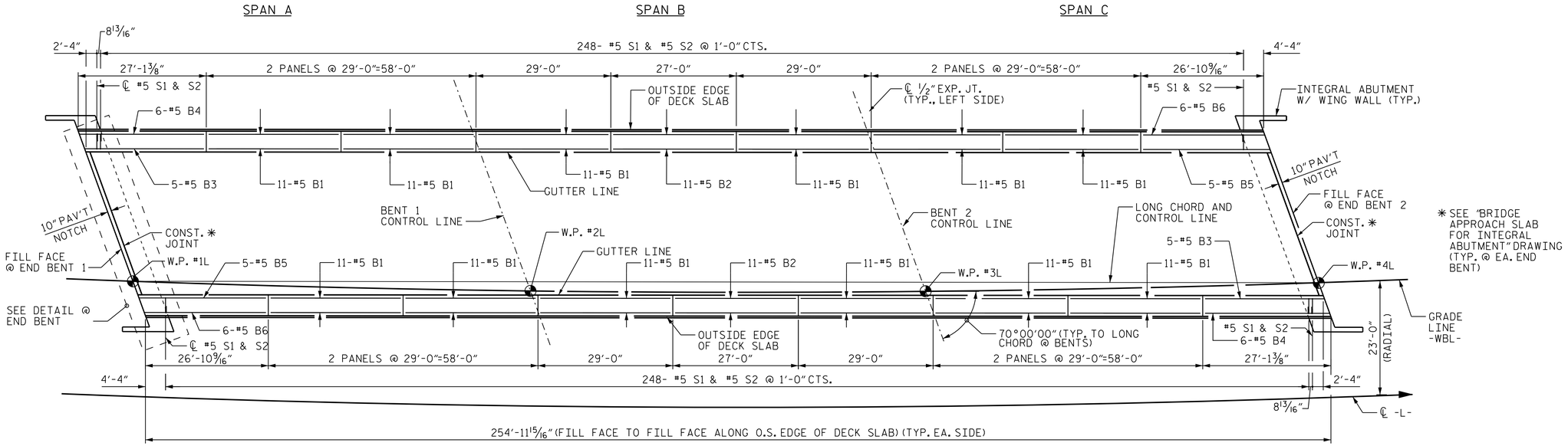

BARRIER RAIL PLAN

NOTES

THE BARRIER RAIL IN THE CONTINUOUS UNIT SHALL NOT BE CAST UNTIL ALL SLAB CONCRETE IN THE UNIT HAS BEEN CAST AND HAS REACHED A MINIMUM COMPRESSIVE STRENGTH OF 3,000 PSI.

THE JOINT IN THE DECK SHALL BE SAWED PRIOR TO THE CASTING OF BARRIER RAIL. SEE BRIDGE APPROACH SLAB DWGS. FOR DETAILS.

ALL REINFORCING STEEL IN BARRIER RAILS SHALL BE EPOXY COATED.

THE #5 S3, S4, S5 AND S6 BARS SHALL BE INSTALLED USING AN ADHESIVE ANCHORING SYSTEM AFTER SAWING THE JOINT. THE YIELD LOAD FOR THE #5 S3, S4, S5 AND S6 BARS IS 18.6 KIPS. FIELD TESTING FOR THE ADHESIVE BONDING SYSTEM IS NOT REQUIRED.

GROOVED CONTRACTION JOINTS, 1/2" IN DEPTH, SHALL BE TOOLED IN ALL EXPOSED FACES OF THE BARRIER RAIL AND IN ACCORDANCE WITH ARTICLE 825-10(B) OF THE STANDARD SPECIFICATIONS. THE CONTRACTION JOINT SHALL BE LOCATED AT EACH THIRD POINT BETWEEN BARRIER RAIL EXPANSION JOINTS. ONLY ONE CONTRACTION JOINT IS REQUIRED AT MIDPOINT OF BARRIER RAIL SEGMENTS LESS THAN 20 FEET IN LENGTH AND NO CONTRACTION JOINTS ARE REQUIRED FOR THOSE SEGMENTS LESS THAN 10 FEET IN LENGTH.

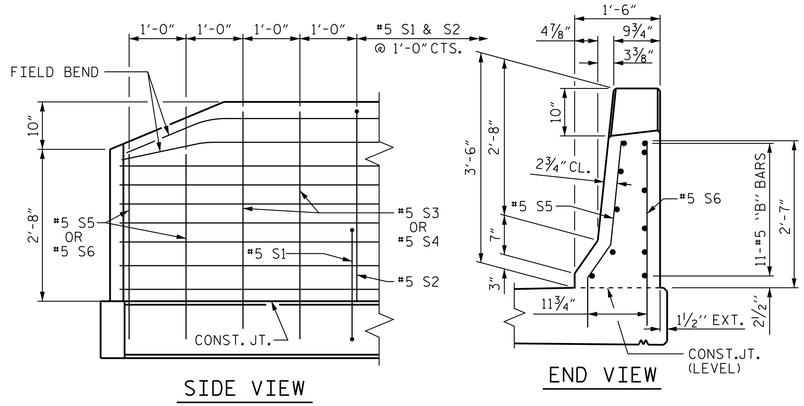

SIDE VIEW

END VIEW

END OF RAIL DETAILS

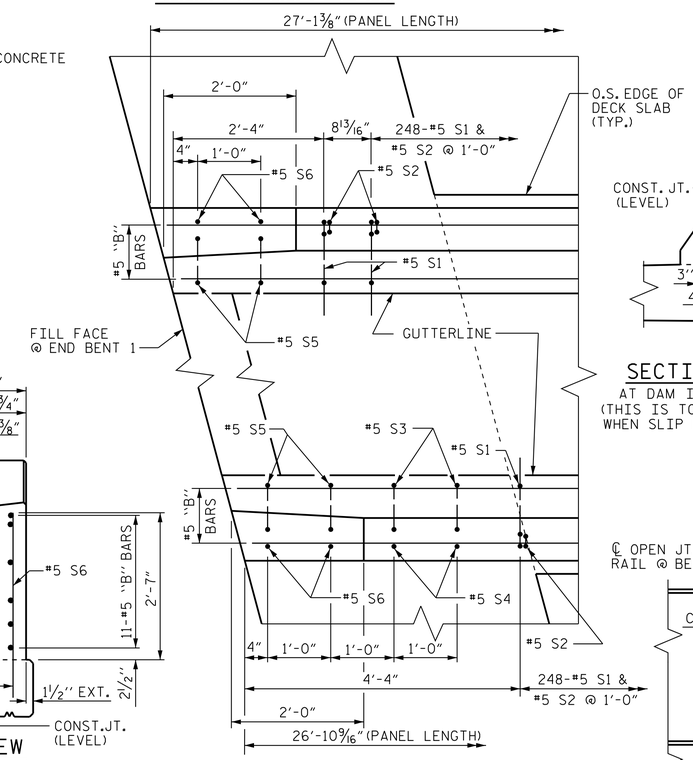

PLAN

DETAIL @ END BENT

END BENT 1 SHOWN END BENT 2 TYP. BY ROTATION

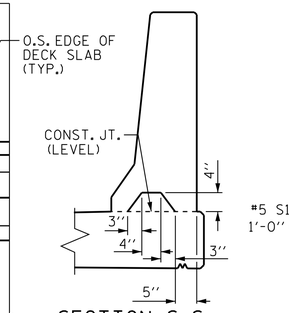

SECTION S-S

AT DAM IN OPEN JOINT (THIS IS TO BE USED ONLY WHEN SLIP FORM IS USED)

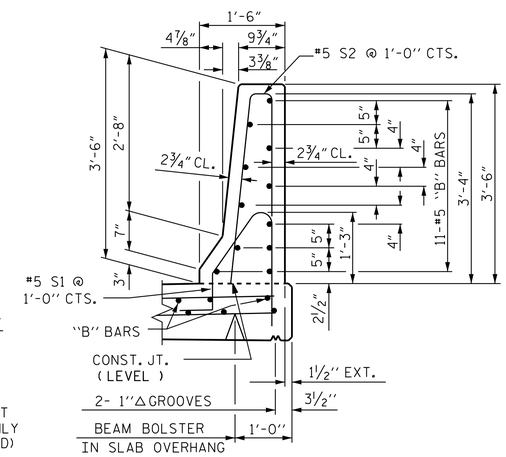

SECTION THRU RAIL

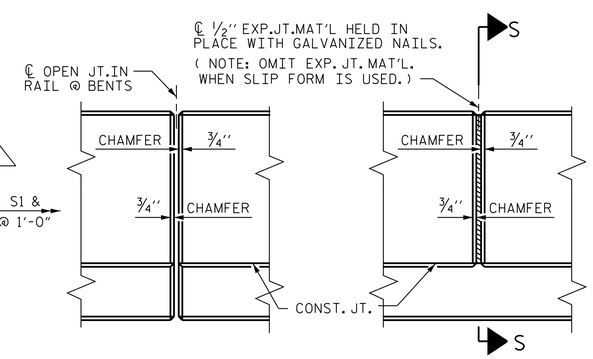

ELEVATION AT EXPANSION JOINTS

BARRIER RAIL DETAILS

BAR TYPES

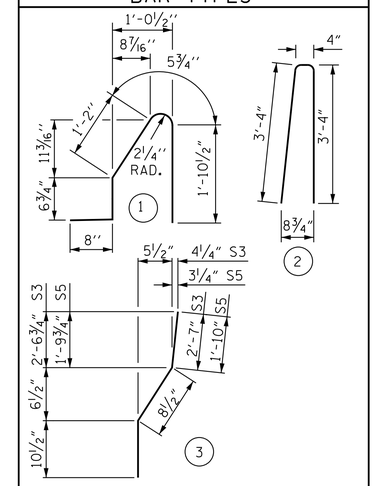

ALL BAR DIMENSIONS ARE OUT TO OUT

BILL OF MATERIAL

FOR CONCRETE BARRIER RAIL ONLY

BAR	NO.	SIZE	TYPE	LENGTH	WEIGHT
* B1	132	#5	STR	28'-8"	3947
* B2	22	#5	STR	26'-8"	612
* B3	10	#5	STR	26'-3"	274
* B4	12	#5	STR	26'-8"	334
* B5	10	#5	STR	26'-11"	281
* B6	12	#5	STR	26'-7"	333
* S1	498	#5	1	4'-9"	2467
* S2	498	#5	2	7'-0"	3636
* S3	8	#5	3	4'-2"	35
* S4	8	#5	STR	4'-0"	33
* S5	8	#5	3	3'-5"	29
* S6	8	#5	STR	3'-3"	27
* EPOXY COATED REINFORCING STEEL					12,008 LBS.
CLASS AA CONCRETE					69.1 CU. YDS.
CONCRETE BARRIER RAIL					510.0 LIN. FT.

PROJECT NO. R-0623

MONTGOMERY COUNTY

STATION: 123+82.50 -L-

STATE OF NORTH CAROLINA
DEPARTMENT OF TRANSPORTATION
RALEIGH

STANDARD

CONCRETE BARRIER RAIL

(WBL)

Stantec Consulting Services Inc.
801 Jones Franklin Road
Suite 300
Raleigh, NC 27606
Tel. (919) 851-6866
Fax. (919) 851-7024
www.stantec.com
License No. F-0672

DRAWN BY : J. B. GEILE DATE : 11/25/13
CHECKED BY : J. T. KELVINGTON DATE : 02-03-14
DESIGN ENGINEER OF RECORD: J. T. KELVINGTON DATE : 03-11-14

NORTH CAROLINA PROFESSIONAL SEAL 13406 ENGINEER JOSEPH T. KELVINGTON

DocuSigned by: Joseph T. Kelvington 5/28/2014
847C9D3780774AF...

REVISIONS							
NO.	BY:	DATE:	NO.	BY:	DATE:	SHEET NO.	S-25
1			3			TOTAL SHEETS	82
2			4				

STR. #1

U:\Structures\Warner Creek\Drawing\WBL - Bridge 264\Drawing\Final\R-0623_SD_BR.dgn 5/12/2014 5:33:24 PM vdoan