DocuSign Envelope ID: 0467AB1B-32B1-4334-81D0-7D50B5979B14

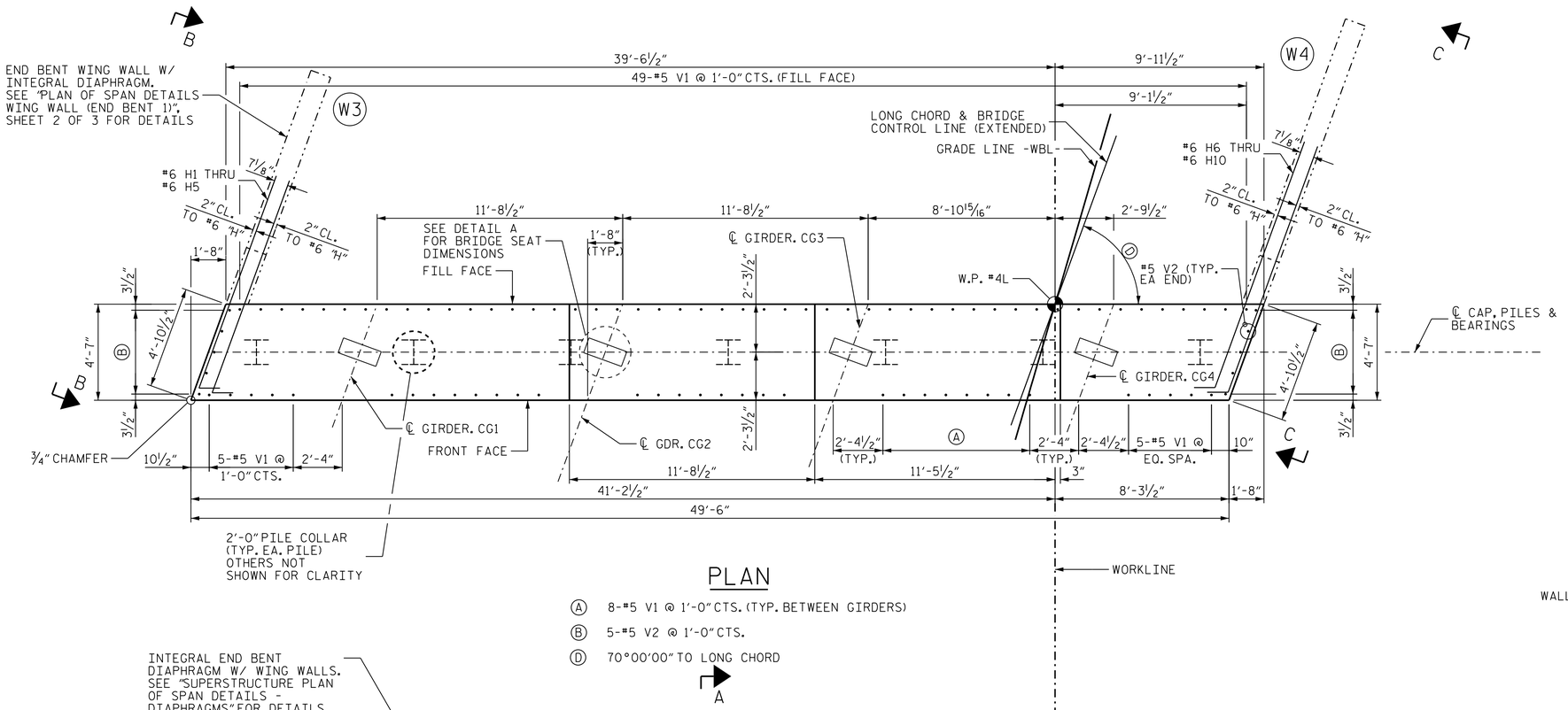

PLAN

Ⓐ 8-#5 V1 @ 1'-0" CTS. (TYP. BETWEEN GIRDERS)

Ⓑ 5-#5 V2 @ 1'-0" CTS.

Ⓓ 70°00'00" TO LONG CHORD

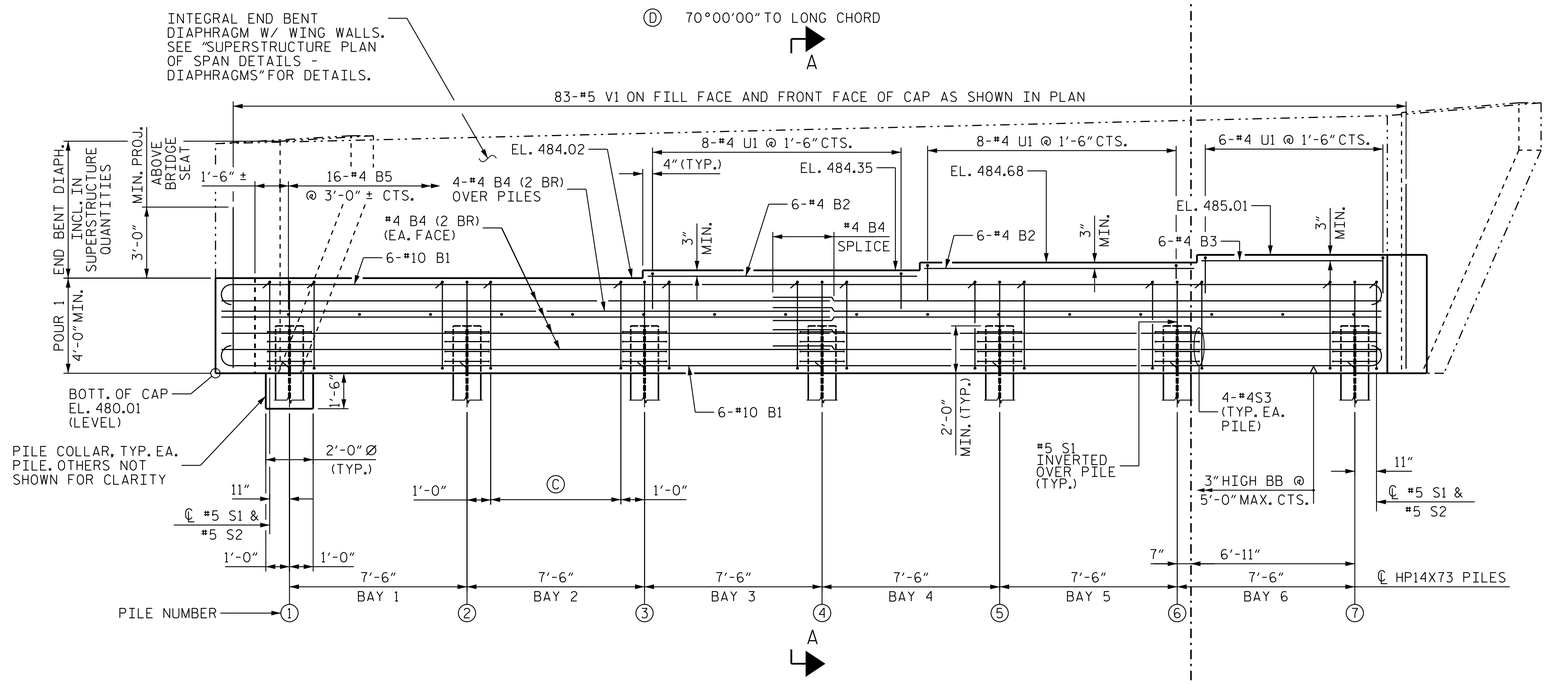

ELEVATION

Ⓒ 7-#5 S1 & 7-#5 S2 @ 11" CTS. (TYP. EA. BAY)

NOTES

INSTALL THE 4" DIA. DRAIN PIPE THROUGH THE WING WALL AS REQUIRED FOR REINFORCED BRIDGE APPROACH FILLS. SEE THE ROADWAY PLANS. REINFORCING STEEL IN THE WING WALL MAY BE SHIFTED AS NECESSARY TO CLEAR THE DRAIN PIPE.

2 BR DENOTES 2 BAR RUN

(EF) - DENOTES EACH FACE OF WING WALL

CHAMFERS ARE NOT REQUIRED EXCEPT AS NOTED.

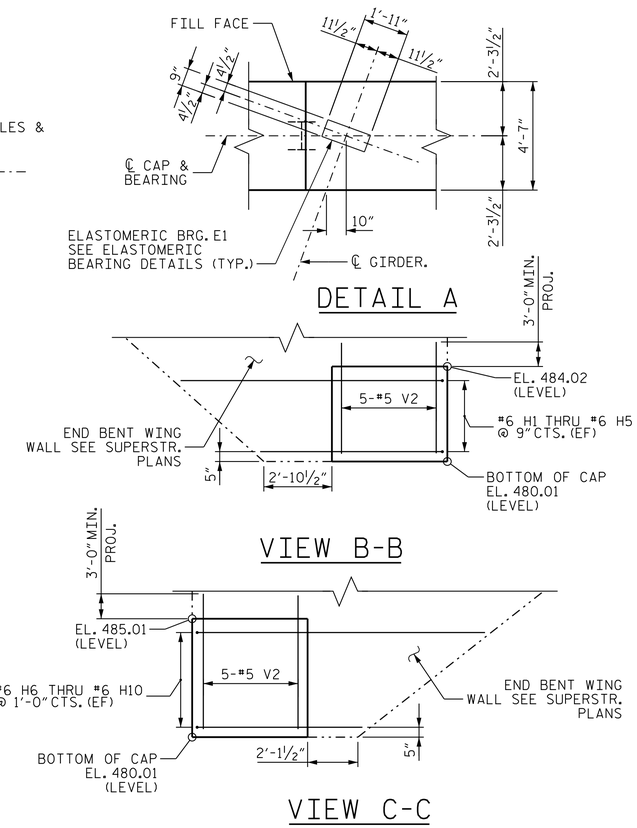

DETAIL A

VIEW B-B

VIEW C-C

BAR	MIN. SPLICE
#4 B4	2'-5"

REINFORCING BAR SPLICES

PROJECT NO. R-0623

MONTGOMERY COUNTY

STATION: 123+82.50 -L-

SHEET 1 OF 2

STATE OF NORTH CAROLINA
DEPARTMENT OF TRANSPORTATION
RALEIGH

SUBSTRUCTURE

END BENT 2

(WBL)

REVISIONS						SHEET NO.
NO.	BY:	DATE:	NO.	BY:	DATE:	S-37
1			3			TOTAL SHEETS
2			4			82

STR. #1

Stantec
Stantec Consulting Services Inc.
801 Jones Franklin Road
Suite 300
Raleigh, NC 27606
Tel. (919) 851-6866
Fax. (919) 851-7024
www.stantec.com
License No. F-0672

DRAWN BY : V. E. FRAGA DATE : 03-03-14
CHECKED BY : J. T. KELVINGTON DATE : 03-07-14
DESIGN ENGINEER OF RECORD: J. T. KELVINGTON DATE : 03-11-14

NORTH CAROLINA PROFESSIONAL SEAL 13406 ENGINEER JOSEPH T. KELVINGTON
DocuSigned by: Joseph T. Kelvington 847C9D3780774AF...
5/28/2014

U:\Structures\Warner Creek\Drawing\WBL - Bridge 264\Drawing\Final\R-0623_SD_EB2_1.dgn 5/12/2014 5:33:42 PM vdoan