DocuSign Envelope ID: E6618080-E6D8-467D-B842-BC4A0736B9E5

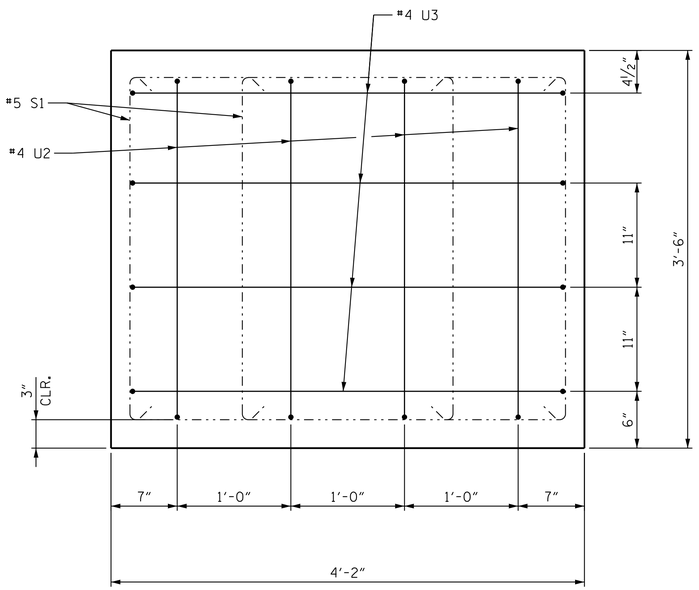

VIEW A-A

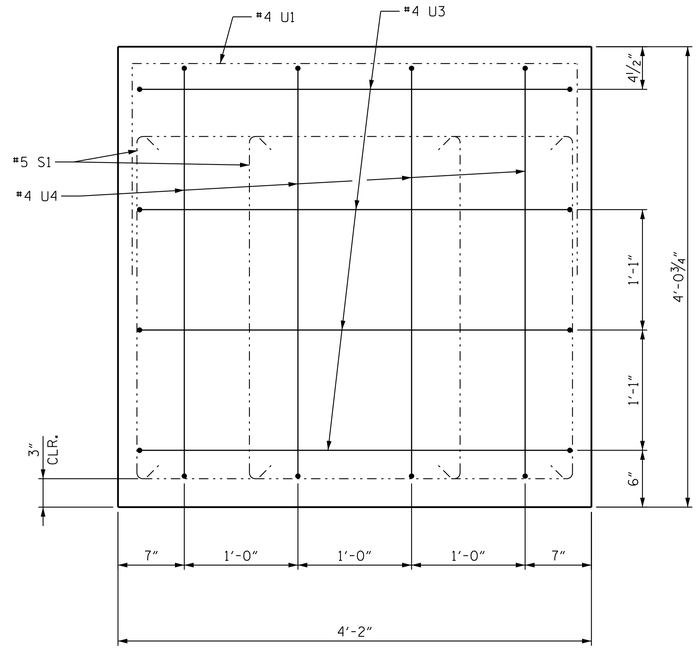

VIEW C-C

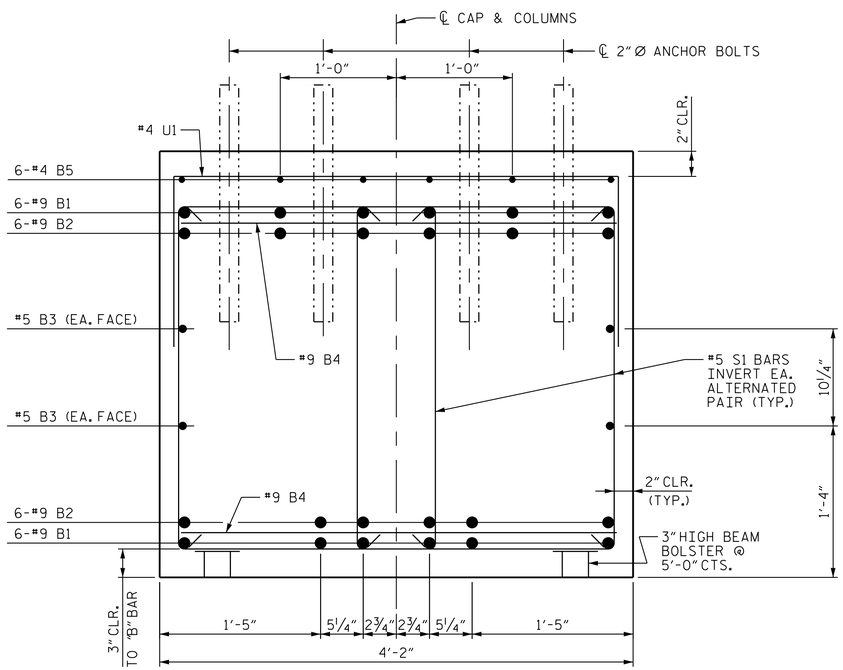

SECTION B-B

BAR TYPES

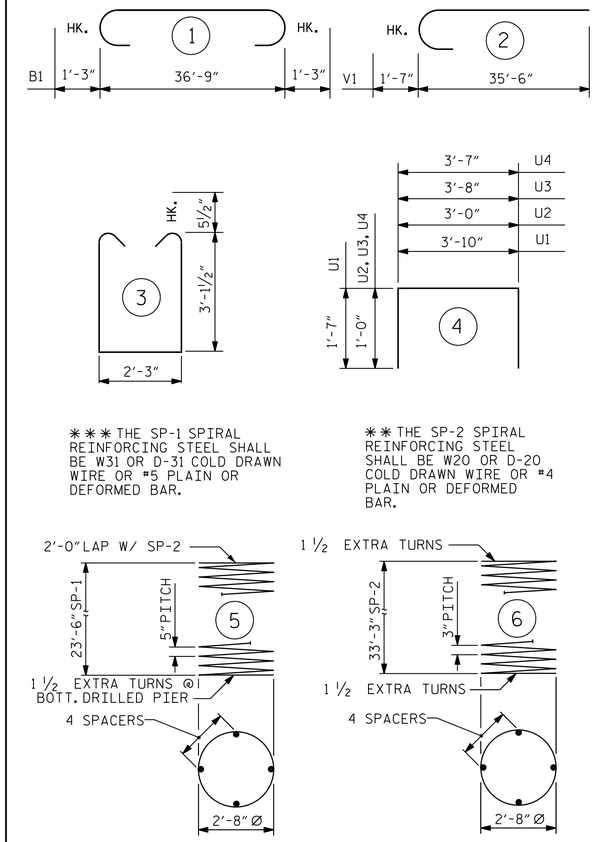

✱✱✱ THE SP-1 SPIRAL REINFORCING STEEL SHALL BE W31 OR D-31 COLD DRAWN WIRE OR #5 PLAIN OR DEFORMED BAR.

✱✱ THE SP-2 SPIRAL REINFORCING STEEL SHALL BE W20 OR D-20 COLD DRAWN WIRE OR #4 PLAIN OR DEFORMED BAR.

ALL BAR DIMENSIONS ARE OUT TO OUT.

BILL OF MATERIAL

BENT #1

BAR	NO.	SIZE	TYPE	LENGTH	WEIGHT
B1	12	9	1	39'-3"	1601
B2	12	9	STR.	36'-3"	1479
B3	4	5	STR.	36'-9"	153
B4	12	9	STR.	3'-10"	156
B5	6	4	STR.	15'-6"	62
M1	48	11	STR.	33'-11"	8650
S1	92	5	3	9'-5"	904
U1	43	4	4	7'-0"	201
U2	4	4	4	5'-0"	13
U3	8	4	4	5'-8"	30
U4	4	4	4	5'-7"	15
V1	48	11	2	37'-1"	9457
REINFORCING STEEL				LBS.	22721
SP-1	3	***	5	478'-3"	1496
SP-2	3	**	6	1120'-9"	2246
SPIRAL COLUMN REINFORCING STEEL				LBS.	3742

DRILLED PIER CONC BREAKDOWN:		
POUR 1 DRILLED PIERS	C.Y.	25.6
3'-6" DIA DRILLED PIERS IN SOIL	LIN. FT.	12.0
3'-6" DIA DRILLED PIERS NOT IN SOIL	LIN. FT.	60.0
CLASS A CONCRETE BREAKDOWN		
POUR #2 COLUMNS	C.Y.	25.8
POUR #3 CAP	C.Y.	21.5
TOTAL CLASS A CONC.	C.Y.	47.3
SID INSPECTIONS	EA.	1
CSL TUBES	LIN. FT.	306.0
CSL TESTING	EA.	1
PERMANENT STEEL CASING FOR 3'-6" DIA. DRILLED PIER	LIN. FT.	6.2

PROJECT NO. R-0623

MONTGOMERY COUNTY

STATION: 339+48.56 -L-

SHEET 3 OF 3

STATE OF NORTH CAROLINA
DEPARTMENT OF TRANSPORTATION
RALEIGH

SUBSTRUCTURE

BENT #1

(WBL)

NORTH CAROLINA PROFESSIONAL SEAL 13406 ENGINEER JOSEPH T. KELVINGTON

DocuSigned by: Joseph T. Kelvington 847C8D3780774AF... 5/27/2014

REVISIONS							
NO.	BY:	DATE:	NO.	BY:	DATE:	SHEET NO.	S-114
1			3			TOTAL SHEETS	162
2			4				

Stantec
Stantec Consulting Services Inc.
801 Jones Franklin Road
Suite 300
Raleigh, NC 27606
Tel. (919) 851-6866
Fax. (919) 851-7024
www.stantec.com
License No. F-0672

DRAWN BY : J. B. GEILE	DATE : 03-20-14	DESIGN ENGINEER OF RECORD: J. T. KELVINGTON	DATE : 04-01-14
CHECKED BY : V. T. DOAN	DATE : 03-31-14		

U:\Structures\Little River\Drawing\WBL - Bridge 266\Final\R-0623_SD_B#_1_3.dgn 5/27/2014 3:55:13 PM Jhagenbush