DocuSign Envelope ID: 31C928B9-C923-48C2-A4E7-966F51E022C3

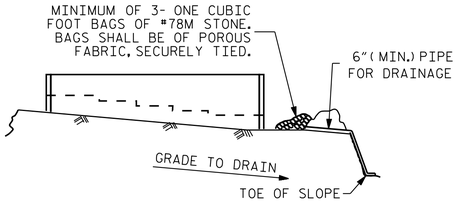

BAGGED STONE AND PIPE SHALL BE PLACED IMMEDIATELY AFTER COMPLETION OF END BENT EXCAVATION. PIPE MAY BE EITHER CONCRETE, CORRUGATED STEEL, CORRUGATED ALUMINUM ALLOY, OR CORRUGATED PLASTIC. PERFORATED PIPE WILL NOT BE ALLOWED.

BAGGED STONE SHALL REMAIN IN PLACE UNTIL THE ENGINEER DIRECTS THAT IT BE REMOVED. THE CONTRACTOR SHALL REMOVE AND DISPOSE OF SILT ACCUMULATIONS AT BAGGED STONE WHEN SO DIRECTED BY THE ENGINEER. BAGS SHALL BE REMOVED AND REPLACED WHENEVER THE ENGINEER DETERMINES THAT THEY HAVE DETERIORATED AND LOST THEIR EFFECTIVENESS.

NO SEPARATE PAYMENT WILL BE MADE FOR THIS WORK AND THE ENTIRE COST OF THIS WORK SHALL BE INCLUDED IN THE UNIT CONTRACT PRICE BID FOR THE SEVERAL PAY ITEMS.

TEMPORARY DRAINAGE AT END BENT

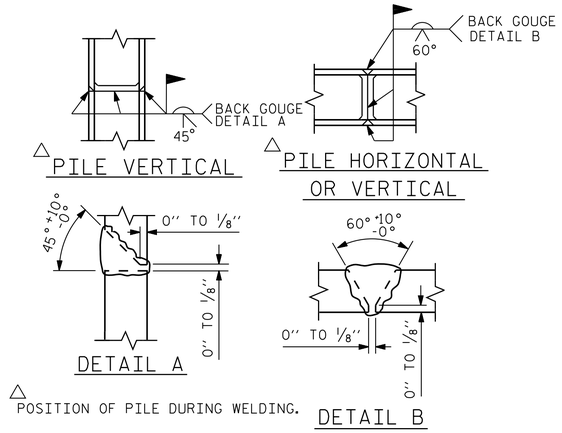

PILE SPLICE DETAILS

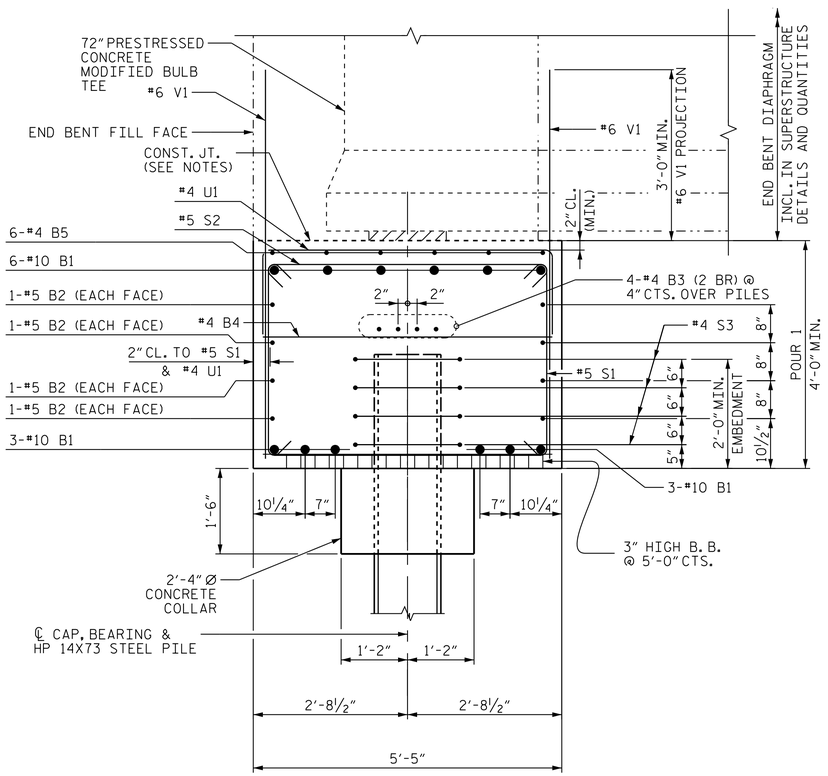

SECTION A-A

BAR TYPES

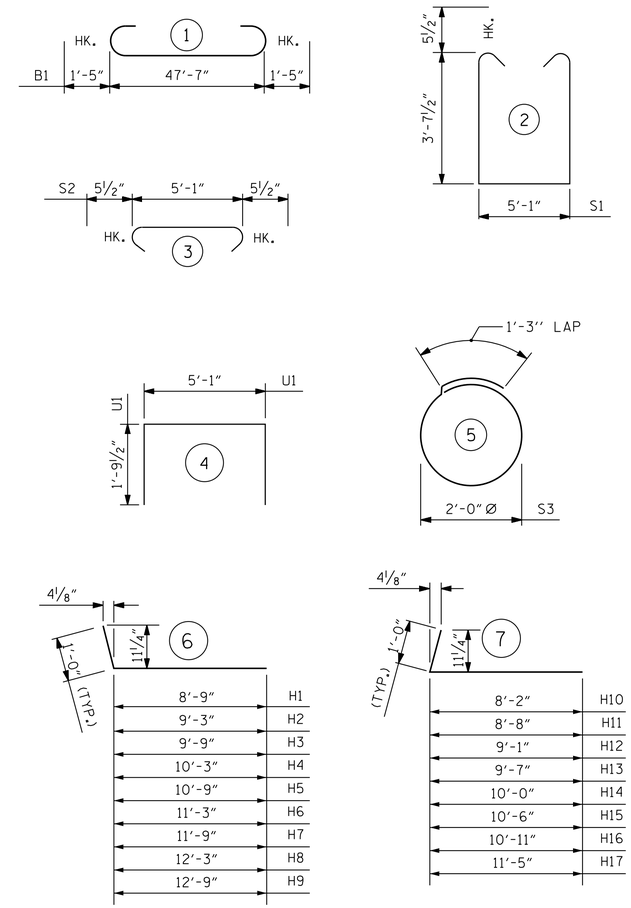

ALL BAR DIMENSIONS ARE OUT TO OUT.

BILL OF MATERIAL

END BENT 1

BAR	NO.	SIZE	TYPE	LENGTH	WEIGHT
B1	12	10	1	50'-5"	2603
B2	8	5	STR.	47'-9"	398
B3	8	4	STR.	25'-1"	134
B4	16	4	STR.	5'-1"	54
B5	6	4	STR.	19'-1"	76
H1	2	6	6	9'-9"	29
H2	2	6	6	10'-3"	31
H3	2	6	6	10'-9"	32
H4	2	6	6	11'-3"	34
H5	2	6	6	11'-9"	35
H6	2	6	6	12'-3"	37
H7	2	6	6	12'-9"	38
H8	2	6	6	13'-3"	40
H9	2	6	6	13'-9"	41
H10	2	6	7	9'-2"	28
H11	2	6	7	9'-8"	29
H12	2	6	7	10'-1"	30
H13	2	6	7	10'-7"	32
H14	2	6	7	11'-0"	33
H15	2	6	7	11'-6"	35
H16	2	6	7	11'-11"	36
H17	2	6	7	12'-5"	37
S1	59	5	2	13'-3"	815
S2	50	5	3	6'-0"	313
S3	36	4	5	7'-7"	182
U1	13	4	4	8'-8"	75
V1	86	6	STR.	6'-10"	883
V2	10	5	STR.	7'-4"	76

REINFORCING STEEL	LBS.	6186
CLASS A CONCRETE BREAKDOWN		
POUR 1 - CAP & COLLARS	C.Y.	43.1
CLASS A CONCRETE TOTAL	C.Y.	43.1
HP14X73 PILES		
NO. 9	LIN. FT.	270
STEEL PILE POINTS	NO.	9

NOTES

TOP SURFACE AREAS OF THE END BENT CAP SHALL BE KEPT CLEAN AND FREE OF LAITANCE.

ROUGH FLOAT AND ROUGHEN THE TOP OF THE END BENT CAP TO PROVIDE MIN. SURFACE AMPLITUDE OF ¼", EXCEPT UNDER BEARING AREAS.

2 BR DENOTES 2 BAR RUN.

PROJECT NO. R-0623

MONTGOMERY COUNTY

STATION: 339+48.56 -L-

SHEET 2 OF 2

STATE OF NORTH CAROLINA
DEPARTMENT OF TRANSPORTATION
RALEIGH

SUBSTRUCTURE

END BENT 1
DETAILS

(EBL)

Stantec
Stantec Consulting Services Inc.
801 Jones Franklin Road
Suite 300
Raleigh, NC 27606
Tel. (919) 851-6866
Fax. (919) 851-7024
www.stantec.com
License No. F-0672

DRAWN BY : J. E. HAGENBUSH	DATE : 03-24-14	DESIGN ENGINEER OF RECORD: J. T. KELVINGTON	DATE : 04-01-14
CHECKED BY : V. T. DOAN	DATE : 04-01-14		

REVISIONS							SHEET NO.
NO.	BY:	DATE:	NO.	BY:	DATE:		S-151
1			3				TOTAL SHEETS
2			4				162

NORTH CAROLINA PROFESSIONAL SEAL 13406 ENGINEER JOSEPH T. KELVINGTON
DocuSigned by: Joseph T. Kelvington 847C9D37B0774AF... 3/27/2014

STR. #4

U:\Structures\Little River\Drawing\EBL - Bridge 32\Final\R-0623_SD_E#1_2.dgn 5/27/2014 3:48:47 PM Jhagenbush