PROJ. REFERENCE NO.	SHEET NO.
R-0623	TMP-6

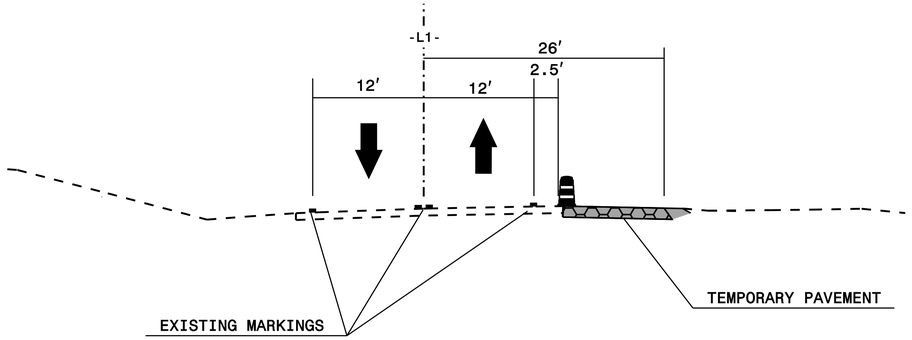

SECTION A-A
-L- STA. 22+50

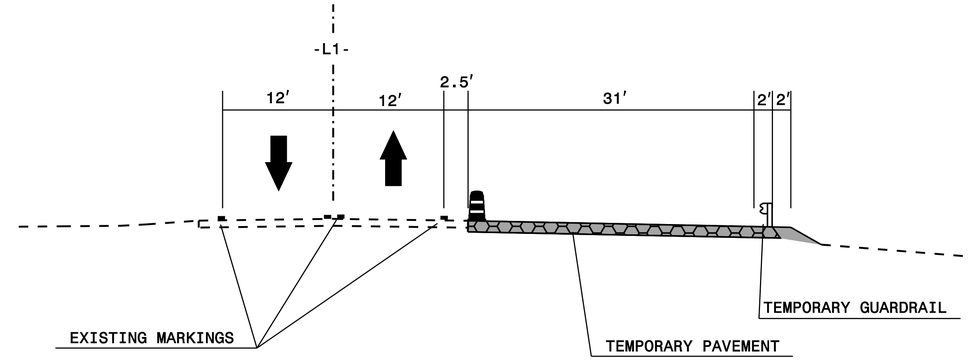

SECTION B-B
-L- STA. 25+50

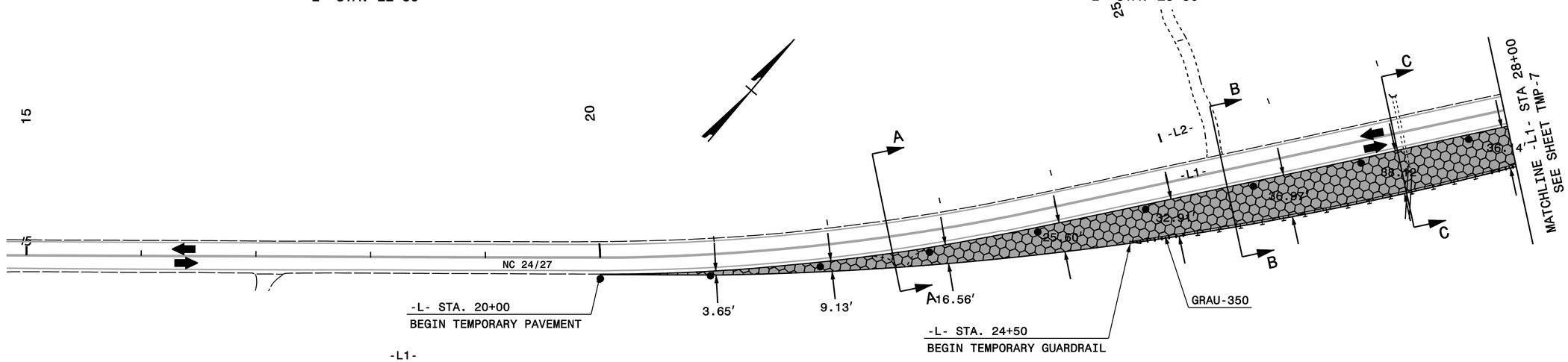

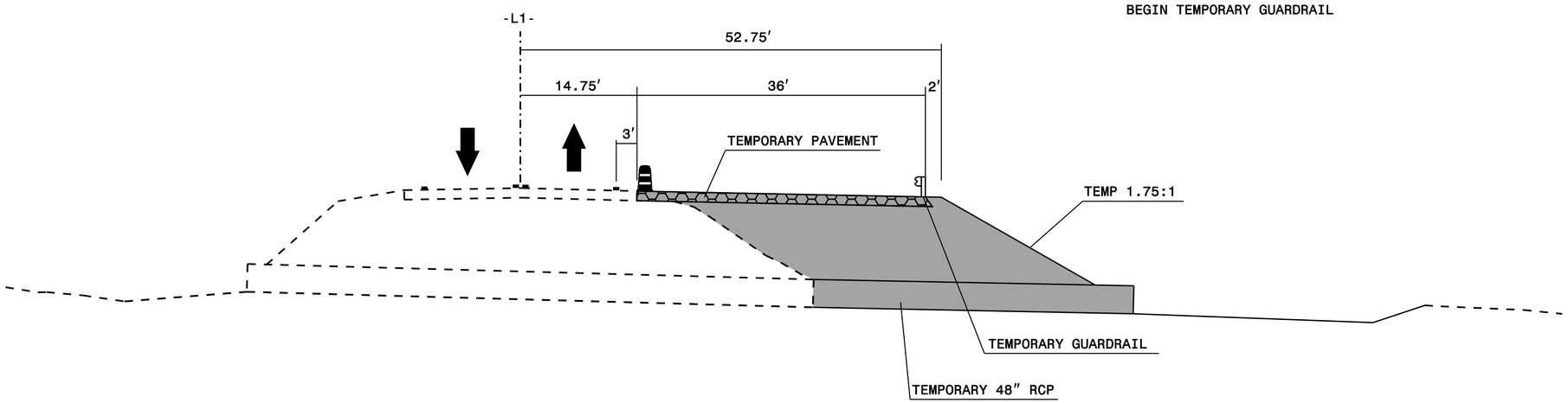

SECTION C-C
-L- STA. 27+00

PLAN PREPARED IN THE OFFICE OF:
PROGRESSIVE DESIGN GROUP, INC.
ENGINEERS • CONSULTANTS

APPROVED: DocuSigned by: Jim Arey DATE: 8/5/2014

NORTH CAROLINA PROFESSIONAL SEAL 025465 ENGINEER JIM AREY

DIVISION OF HIGHWAYS • STATE OF NORTH CAROLINA • DEPARTMENT OF TRANSPORTATION • WORK ZONE TRAFFIC CONTROL

PHASE I