PROJ. REFERENCE NO.	SHEET NO.
R-0623	TMP-37

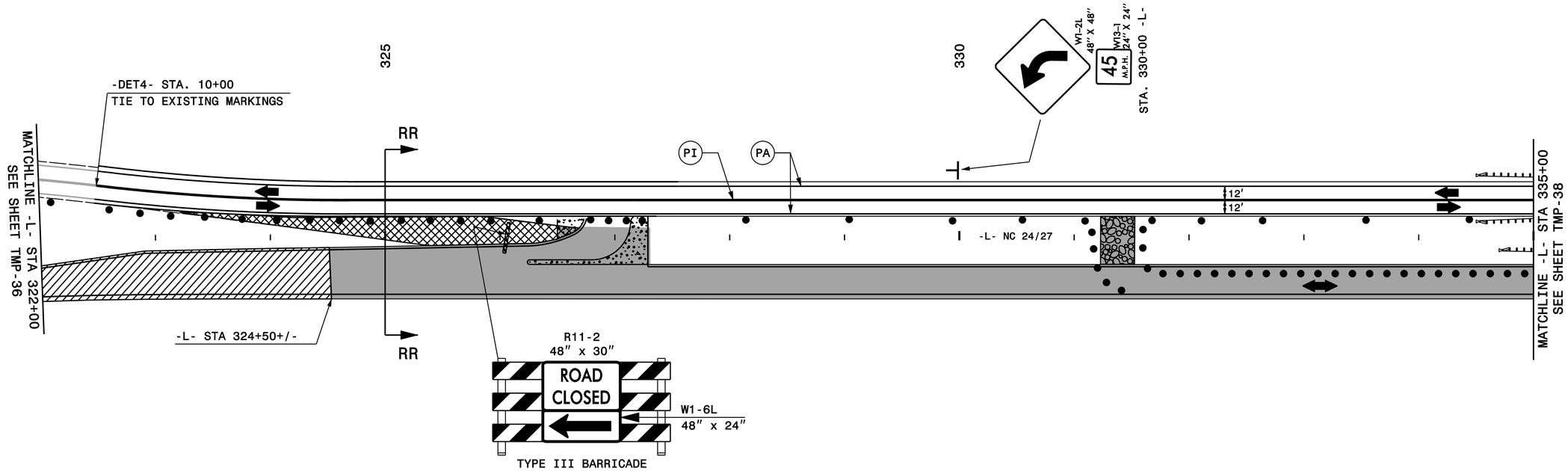

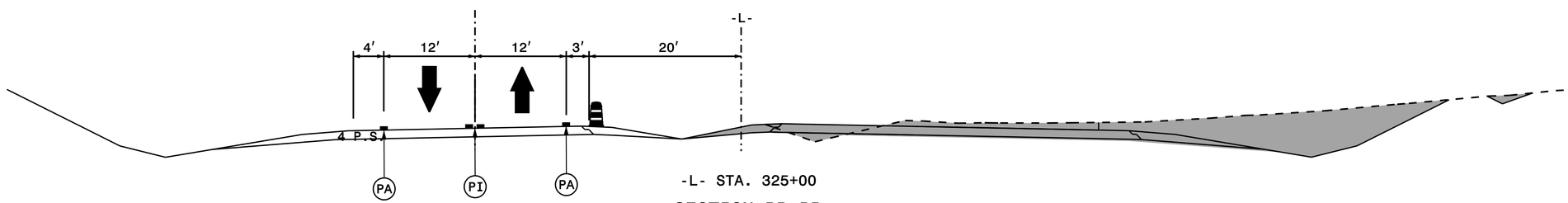

SECTION RR-RR

PLAN PREPARED IN THE OFFICE OF:
PROGRESSIVE DESIGN GROUP, INC.
ENGINEERS • CONSULTANTS

APPROVED: DocuSigned by: Jim Arey DATE: 8/5/2014

NORTH CAROLINA PROFESSIONAL SEAL 025465 ENGINEER JIM AREY

DIVISION OF HIGHWAYS • STATE OF NORTH CAROLINA • DEPARTMENT OF TRANSPORTATION • WORK ZONE TRAFFIC CONTROL

PHASE II