PROJ. REFERENCE NO.	SHEET NO.
R-0623	TMP-9A

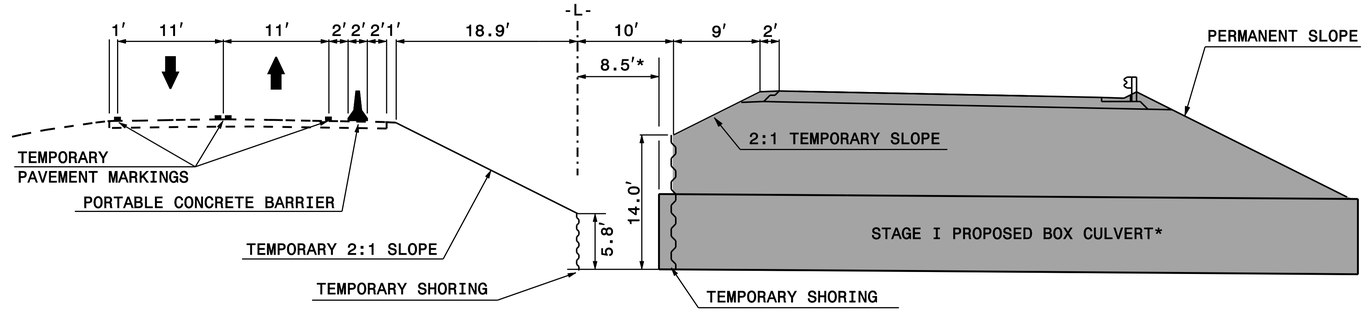

-L- STA. 53+80
SECTION I-I

* SEE STRUCTURE PLANS FOR DETAILED BOX CULVERT STAGING INFORMATION

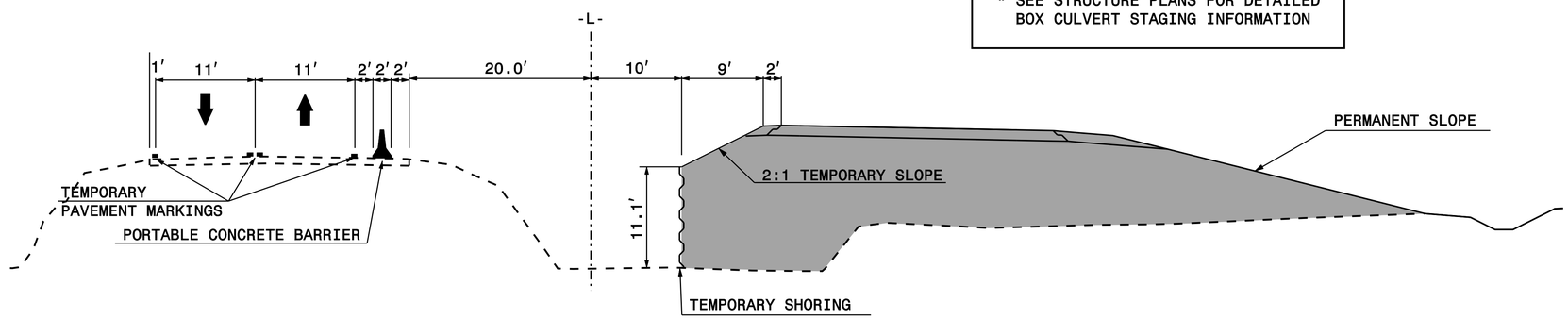

-L- STA. 54+55
SECTION J-J

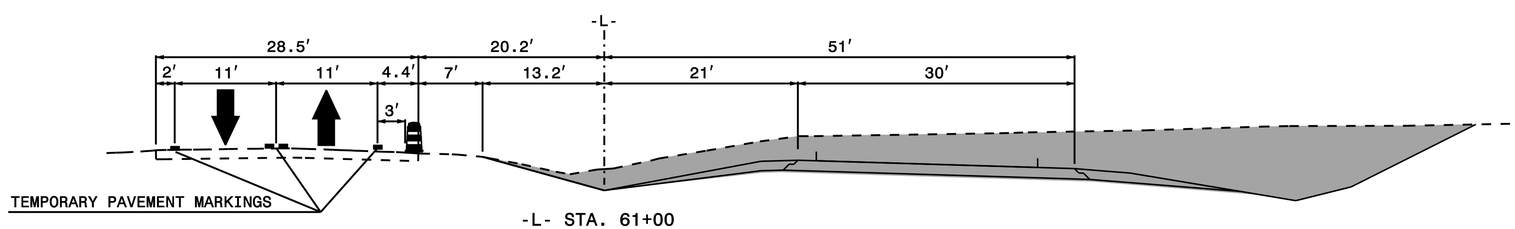

-L- STA. 61+00
SECTION K-K

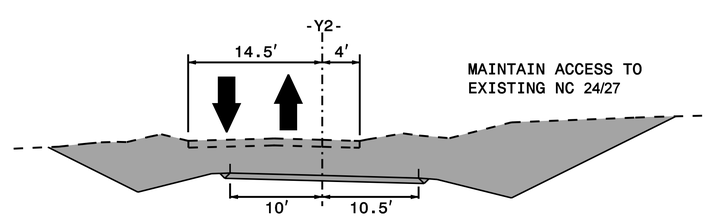

-Y2- STA. 11+00
SECTION L-L

PLAN PREPARED IN THE OFFICE OF:
PROGRESSIVE DESIGN GROUP, INC.
ENGINEERS • CONSULTANTS

APPROVED: DocuSigned by: Jim Arey DATE: 8/5/2014

NORTH CAROLINA PROFESSIONAL SEAL 025465 ENGINEER JIM AREY

DIVISION OF HIGHWAYS • STATE OF NORTH CAROLINA • DEPARTMENT OF TRANSPORTATION • WORK ZONE TRAFFIC CONTROL

PHASE I