PROJ. REFERENCE NO.	SHEET NO.
R-0623	TMP-2L

TRAFFIC CONTROL TREATMENT FOR NEW STOP LOCATION FOR HIGH VOLUME ROAD (ADT OVER 6000)

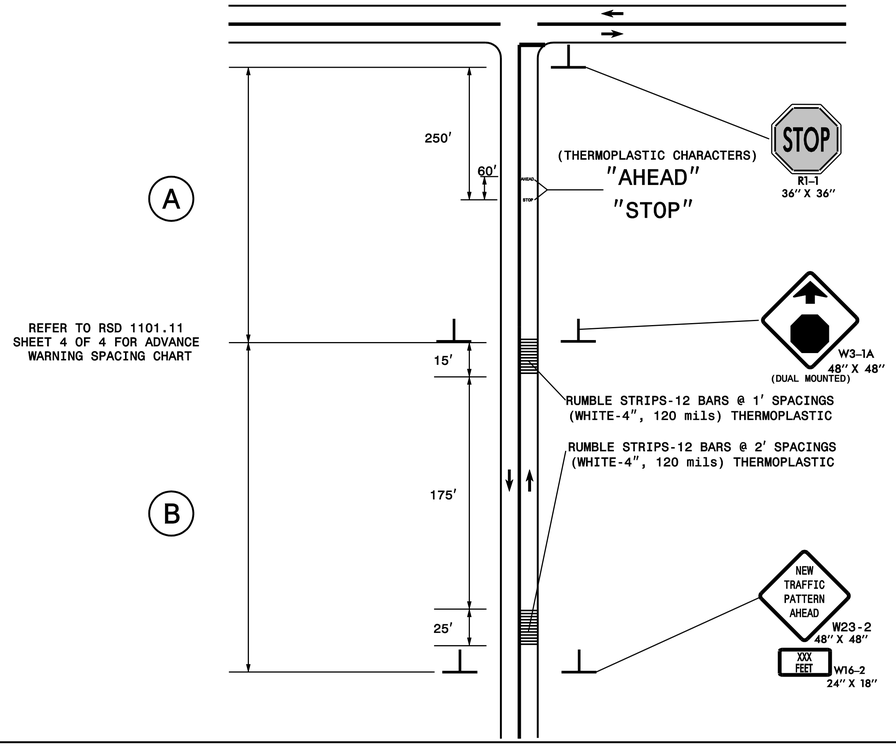

TRAFFIC CONTROL TREATMENT FOR NEW STOP LOCATION FOR MEDIUM TO HIGH VOLUME ROAD (ADT 1500 TO 6000)

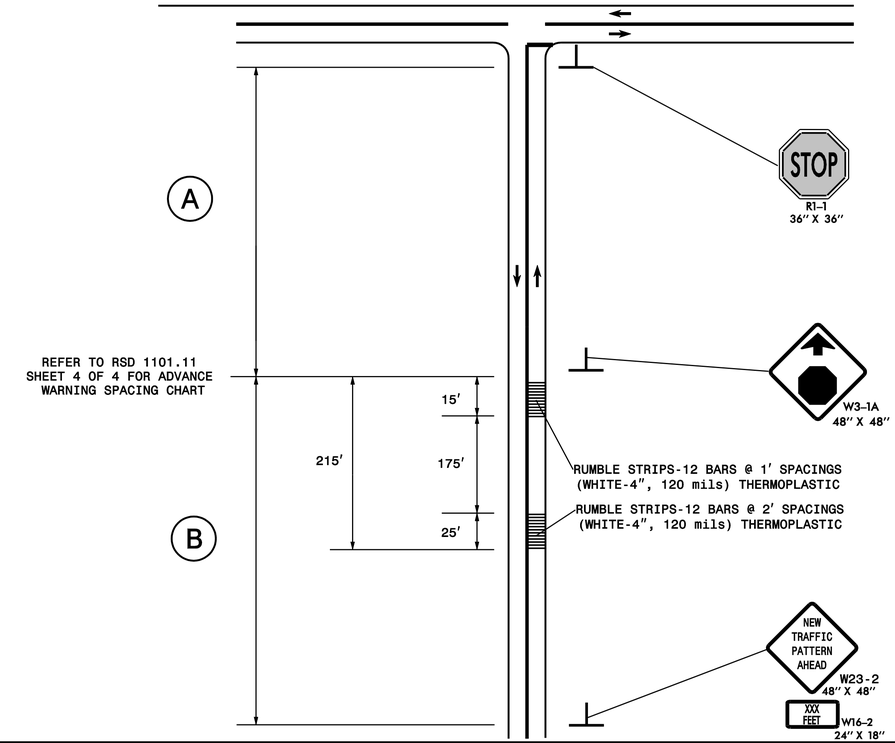

TRAFFIC CONTROL TREATMENT FOR NEW STOP LOCATION FOR MEDIUM VOLUME ROAD (ADT 750 TO 1500)

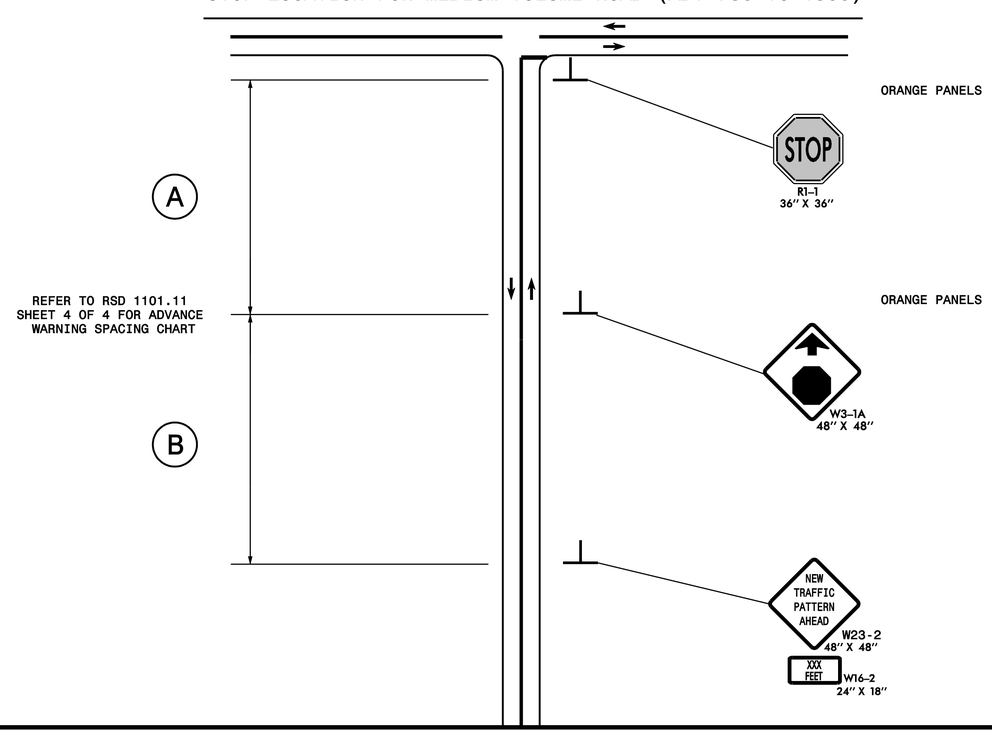

TRAFFIC CONTROL TREATMENT FOR NEW STOP LOCATION FOR LOW VOLUME ROAD (ADT UNDER 750)

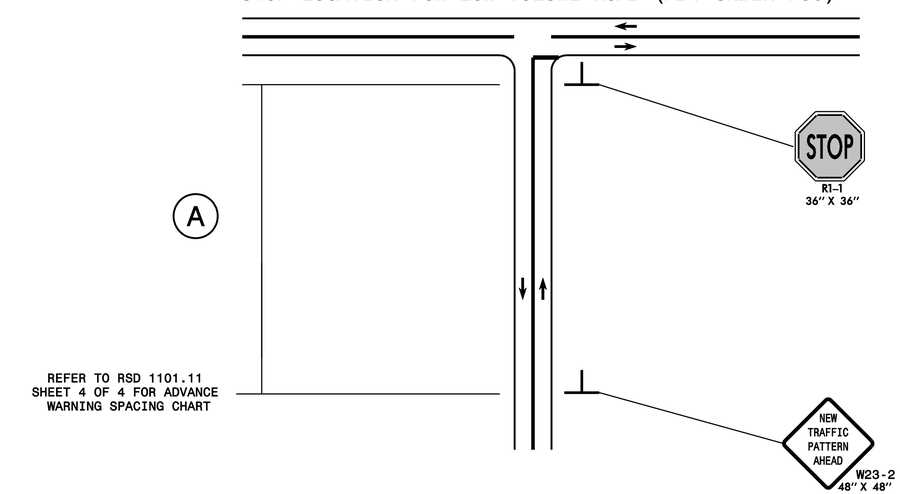

NOTE: MAY ADD CHANGEABLE MESSAGE SIGN IN ADVANCE OF "NEW TRAFFIC PATTERN AHEAD" SIGN FOR ADDITIONAL ADVANCE WARNING.

PLAN PREPARED IN THE OFFICE OF:
PROGRESSIVE DESIGN GROUP, INC.
ENGINEERS • CONSULTANTS

APPROVED: DocuSigned by: Jim Arey 7AC4C3BCC4F4B2... DATE: 8/5/2014

NORTH CAROLINA PROFESSIONAL SEAL 025465 ENGINEER JIM AREY

DIVISION OF HIGHWAYS • STATE OF NORTH CAROLINA • DEPARTMENT OF TRANSPORTATION • WORK ZONE TRAFFIC CONTROL

TRAFFIC CONTROL FOR NEW STOP LOCATIONS FOR -Y- LINES