PROJ. REFERENCE NO.	SHEET NO.
R-0623	TMP-38

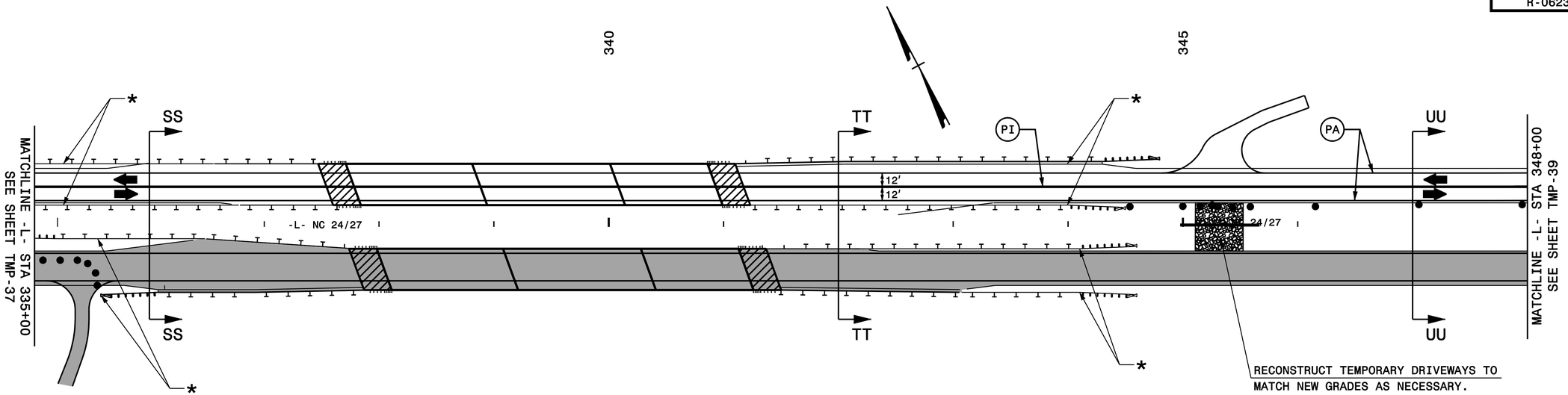

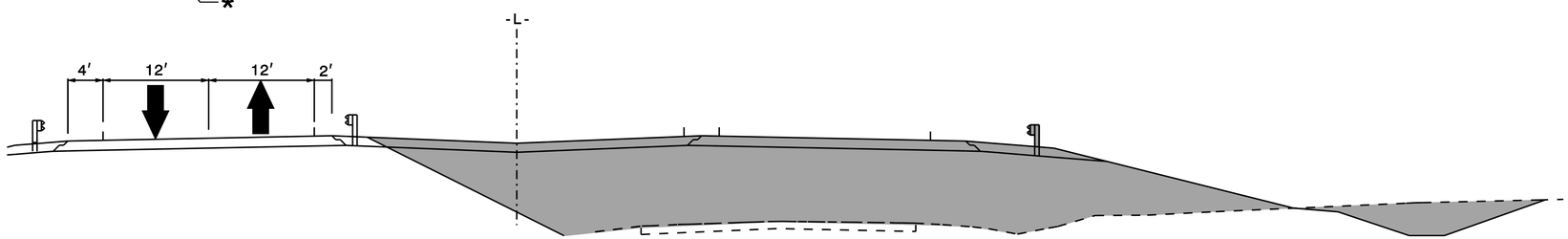

-L- STA. 336+00

SECTION SS-SS

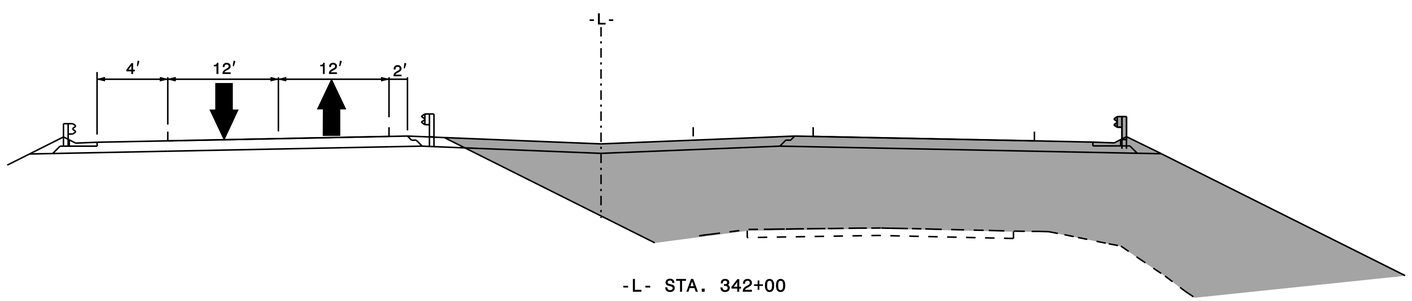

-L- STA. 342+00

SECTION TT-TT

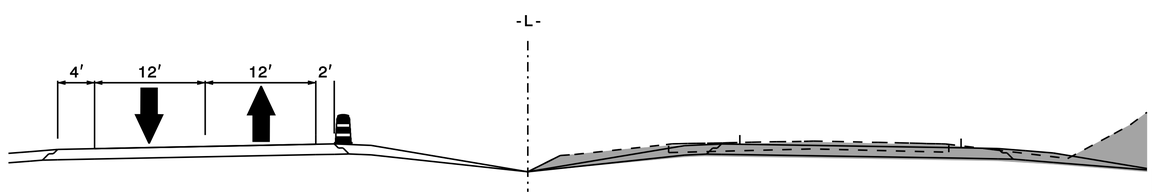

-L- STA. 347+00

SECTION UU-UU

* SEE TEMPORARY GUARDRAIL SUMMARY SHEET 3B-5 OF THE ROADWAY DESIGN PLANS FOR PLACEMENT OF TEMPORARY GUARDRAIL.

PLAN PREPARED IN THE OFFICE OF:
PROGRESSIVE DESIGN GROUP, INC.
ENGINEERS • CONSULTANTS

APPROVED: DocuSigned by: Jim Arey DATE: 8/5/2014

NORTH CAROLINA PROFESSIONAL SEAL 025465 ENGINEER JIM AREY

DIVISION OF HIGHWAYS • STATE OF NORTH CAROLINA • DEPARTMENT OF TRANSPORTATION • WORK ZONE TRAFFIC CONTROL

PHASE II